REFERENCE PLATES

1. Existing John Day North Fishladder

Drawing Number (Order of listing)

Structural Drawings		Electrical Drawings
JDD-1-4-2/32		JDD-1-6-13/14
JDD-1-4-2/34		
		JDF-1-6-2/2
JDF-1-4-2/37		JDF-1-6-2/3
JDF-1-4-2/38		JDF-1-6-2/4
JDF-1-4-2/39		JDF-1-6-2/5
JDF-1-4-2/40		JDF-1-6-2/6
JDF-1-4-2/41		JDF-1-6-2/7
JDF-1-4-2/42		JDF-1-6-2/8
JDF-1-4-2/43		JDF-1-6-2/9
JDF-1-4-2/44		JDF-1-6-2/10
JDF-1-4-2/45		JDF-1-6-2/11
JDF-1-4-2/46		JDF-1-6-2/12
JDF-1-4-2/47		JDF-1-6-2/13
JDF-1-4-2/48		JDF-1-6-5/3
JDF-1-4-2/52		JDF-1-6-5/10
JDF-1-4-2/58		JDF-10.0-6-2/3
JDF-1-5-2/9		
JDF-1-5-2/12		JDN-1-6-14/4
JDF-1-5-2/19		JDN-1-6-14/5.1
JDF-1-5-2/20		JDN-1-6-14/5
JDF-1-5-2/21		JDN-1-6-14/7
JDF-1-5-2/22		
JDF-1-5-2/23		
JDF-1-5-2/25		
JDF-1-5-2/26		
JDF-1-5-2/27		
JDF-1-5-2/28		
JDF-1-5-2/29		
JDF-1-5-2/30		
JDF-1-5-2/31		
JDF-60-150-120-5		
JDF-60-150-44-43		
JDN-1-3-20/1		

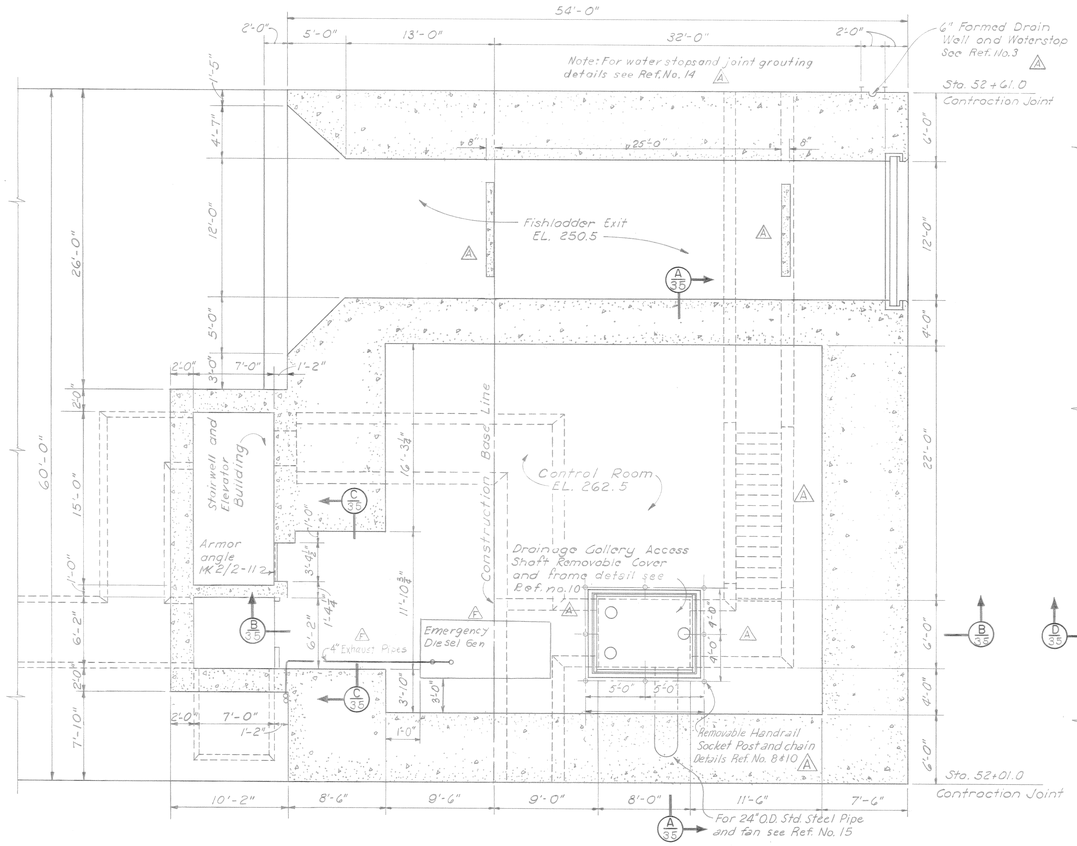

SECTION AT EL. 262.50

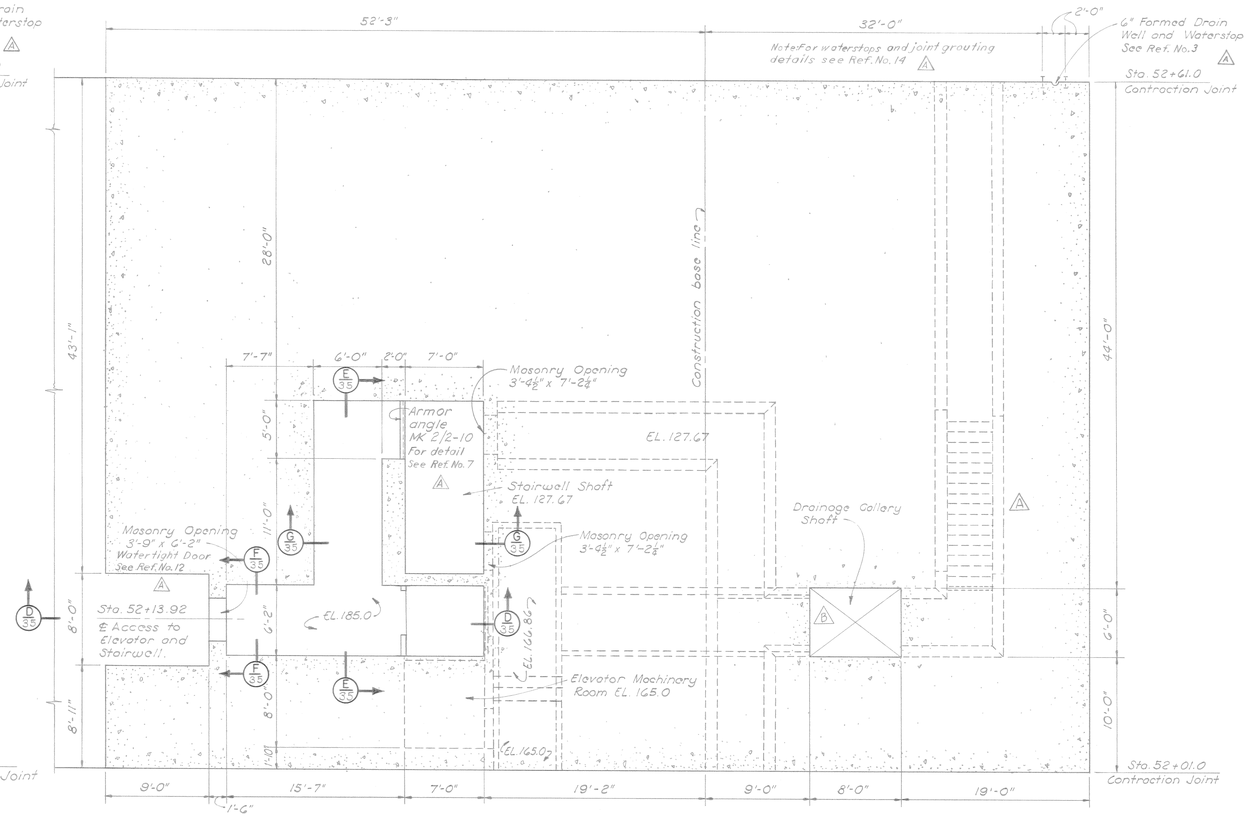

SECTION AT EL. 185.0

NOTES:
1. For General Notes See Dwg. JDD-1-4-2/1
2. Concrete Item (96)
3. Precast Concrete Item (49)
4. Handrail Panel Type Item (109)
5. Cover Plate and Frame Item (121)
6. Armor Angles Item (121)

REFERENCE DRAWINGS:
1. Monolith 3-Elevator and Stairway Building ---------- JDD-1-2-2/2
2. Monoliths 1,2 & 3-General Plan ---------- JDD-1-4-2/1
3. Monolith 1-Drain Well and Waterstop Details ---------- JDD-1-4-2/11
4. Monolith 3-Plan and Details ---------- JDD-1-4-2/27
5. Monolith 3-Deck Plan and Sections ---------- JDD-1-4-2/31
6. Monoliths 1,2 & 3-Stairway and Handrail Details ---------- JDD-1-5-2/1
7. Monoliths 1,2 & 3-Misc. Metal Details ---------- JDD-1-5-2/2
8. Monoliths 1 & 2-Misc. Metal Socket Detail ---------- JDD-1-5-2/6
9. Monoliths 2 & 3-Operating Gallery Removable Handrail ---------- JDD-1-5-2/7
10. Monolith 3-Drainage Gallery Access Shaft Cover & Handrail ---------- JDD-1-5-2/8
11. Monolith 3-Access Shaft Removable Cover and Frame ---------- JDD-1-5-2/11
12. Monolith 3-Watertight Door ---------- JDD-1-5-2/12
13. Monolith 3-Fish Ladder Removable Handrail ---------- JDD-1-5-2/13
14. Nav. Lock and Monolith 3-Joint Grouting Detail ---------- JDN-1-4-2/54
15. Monolith 3-DSQ-1 Substation Room Wiring Diagram
24" O.D. Std. Steel Pipe and Fan Details ---------- JDN-1-6-13/14
16. Monolith 1, 2 & 3 Location of 3"φ 28 Gage Sheet Metal Drain Pipe JDD-1-4-2/5

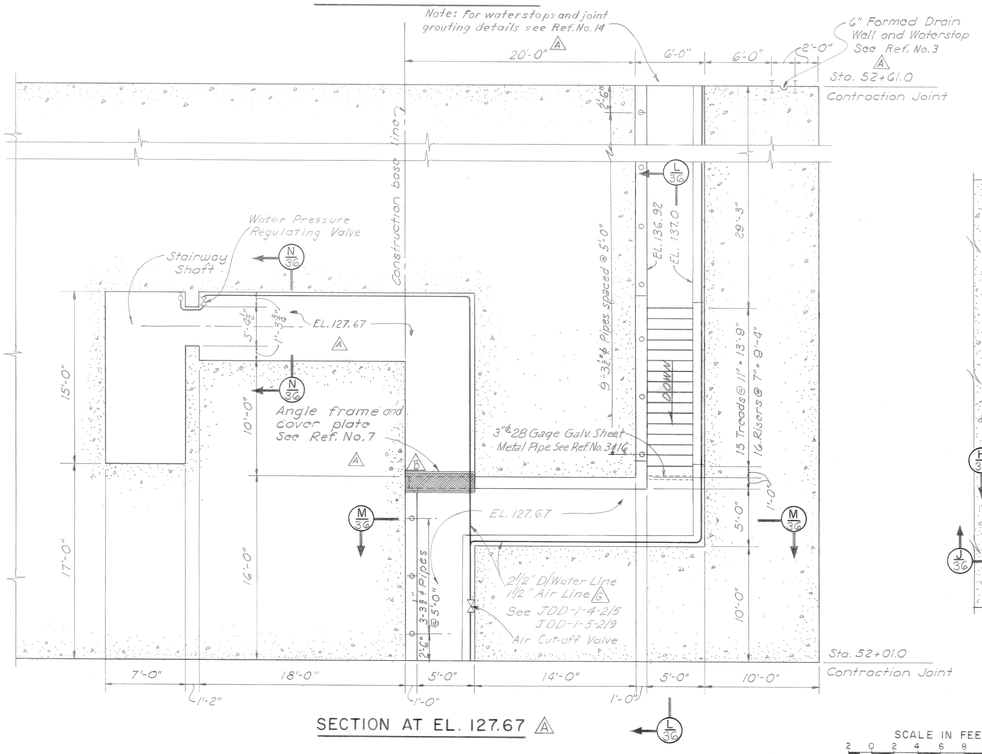

SECTION AT EL. 127.67

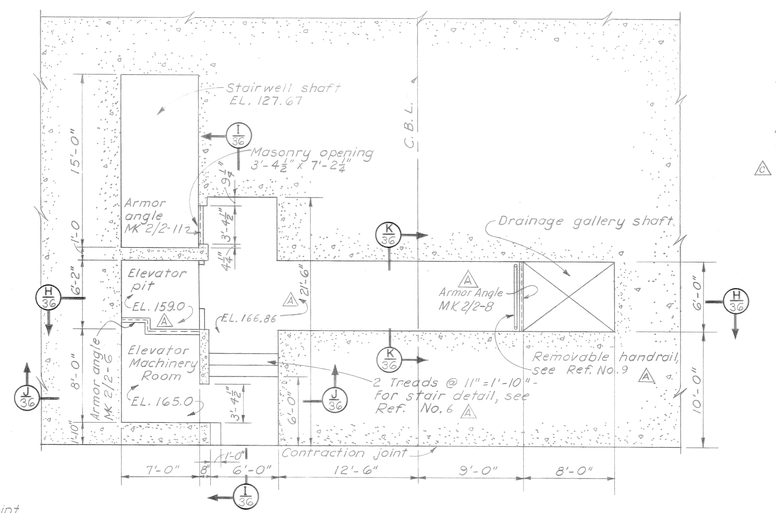

PART SECTION EL. 166.86

SCALE IN FEET
2 0 2 4 6 8 10 12 14

REVISION	DATE	DESCRIPTION	BY
G	23 Mar 81	Added D/Water & Air Lines	R.B.
F	7 Feb 71	Added Emergency Diesel Gen Exhaust Piping	K.W.L.
E	24 SEP 64	AS CONSTRUCTED	EWR
D	20 APR 61	Revised weirs in permanent fish ladder exit	[illegible]
C	12 JAN 60	Revised Drawing References	[illegible]
B	16 Nov 59	Shown Location of Angle Frame on Sect at EL. 127.67	[illegible]
A	16 Oct 59	Added Notes, Ref. Dwgs., Elev. and Weirs, to Sec. at Elev. 262.50 and added Upstream Gutter to Drainage Gallery Sec. at EL. 127.67	[illegible]

U. S. ARMY ENGINEER DISTRICT
WALLA WALLA, WASHINGTON

DESIGNED: Legg
DRAWN: Cummings
CHECKED: W.H.L.
PREPARED: [signature] CHIEF, STRUCT. DES. SECT.

JOHN DAY LOCK AND DAM
COLUMBIA RIVER, OREGON AND WASHINGTON
NORTH NON-OVERFLOW DAM
MONOLITH 3
SECTIONS

SUBMITTED: Otto R. Lemm CHIEF, DESIGN BRANCH
RECOMMENDED: E. C. Frampton CHIEF, ENGINEERING DIVISION
APPROVED: [signature] COLONEL, C. E. DISTRICT ENGINEER
DATE: 31 Aug 59
SCALE AS SHOWN
INV. NO. ENG. C-GO-2
FILE NO. JDD-1-4-2/32
SHEET 40

CORPS OF ENGINEERS

U. S. ARMY

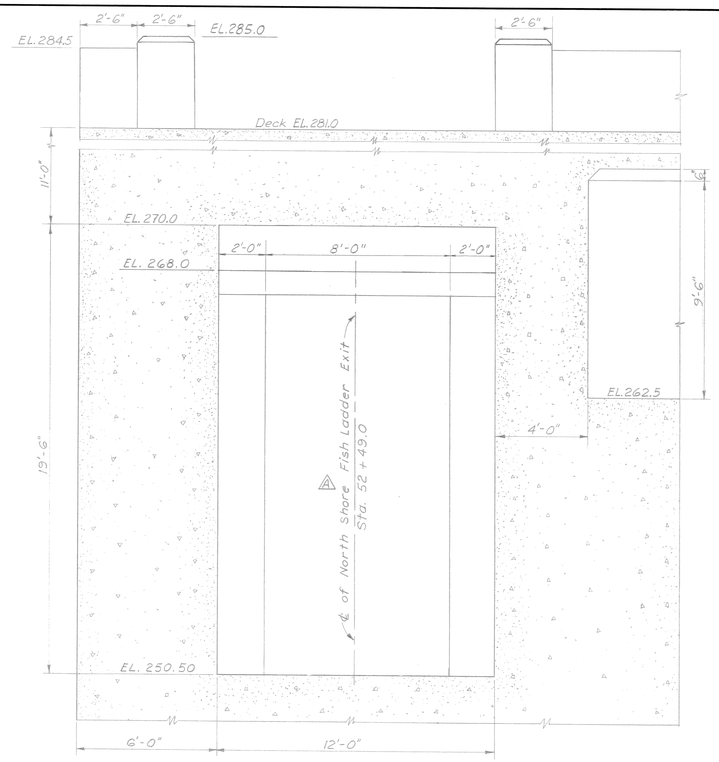

SECTION A

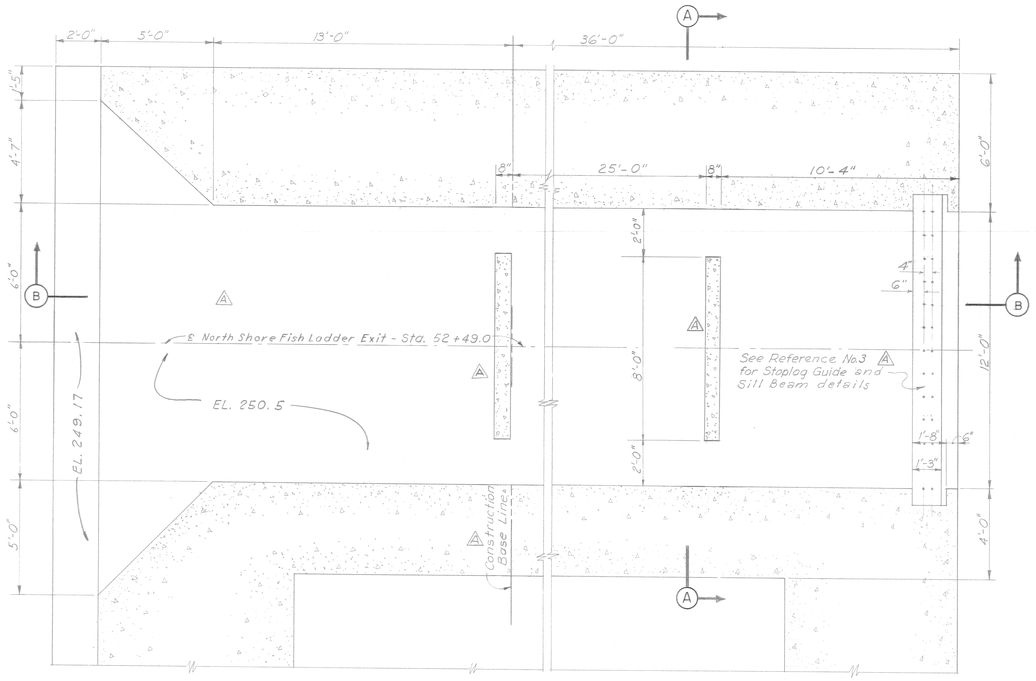

PART PLAN AT EL. 262.5

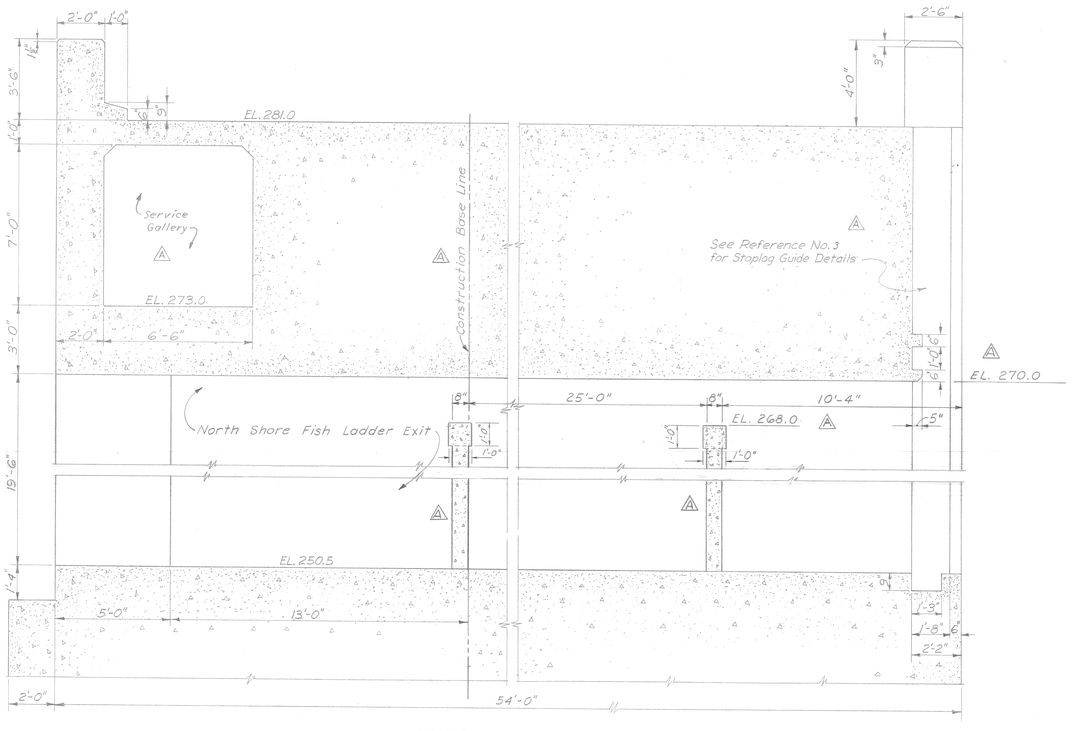

SECTION B

NOTES:

1. For General Notes see Dwg. JDD-1-4-2/1
2. Concrete Item (46)

REFERENCE DRAWINGS:

1. Monoliths 1, 2 & 3 - General Plan ---------- JDD-1-4-2/1
2. Monolith 3 - Plan and Details ---------- JDD-1-4-2/27
3. Monolith 3 - Fish Ladder Stoplog Guide Details ----- JDD-1-5-2/13

SCALE IN FEET

2 0 2 4 6

REVISION	DATE	DESCRIPTION	BY
C	24 SEP 65	AS CONSTRUCTED	EWR
B	20 APR 61	Revised weirs in permanent fish ladder exit	[illegible]
A	16 Oct 59	Added notes, reference drawings and weir to north shore fish ladder exit	[illegible]

U. S. ARMY ENGINEER DISTRICT
WALLA WALLA, WASHINGTON

DESIGNED: Legg
DRAWN: G.D.S.
CHECKED: W.H.L.
PREPARED: [signature] CHIEF, STRUCT. DES. SECT.

JOHN DAY LOCK AND DAM
COLUMBIA RIVER, OREGON AND WASHINGTON
NORTH NON-OVERFLOW DAM
MONOLITH 3
PLANS AND SECTIONS

SUBMITTED: Otto R. Lenow
CHIEF, DESIGN BRANCH

APPROVED: [signature] DATE 31 Aug 59
COLONEL, C. E. DISTRICT ENGINEER

RECOMMENDED: E. C. Tranger
CHIEF, ENGINEERING DIVISION

SCALE AS SHOWN | INV. NO. ENG. C-60-2

SHEET 51 | FILE NO. JDD-1-4-2/34

VOLUME 1 CONTRACT 60-180

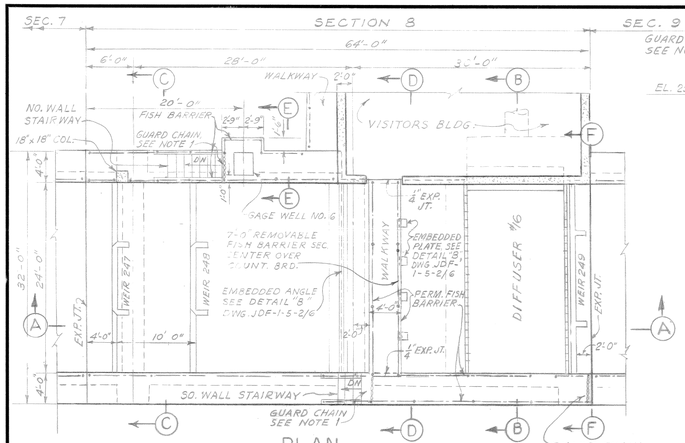

PLAN

SCALE: 1/8" = 1'-0"

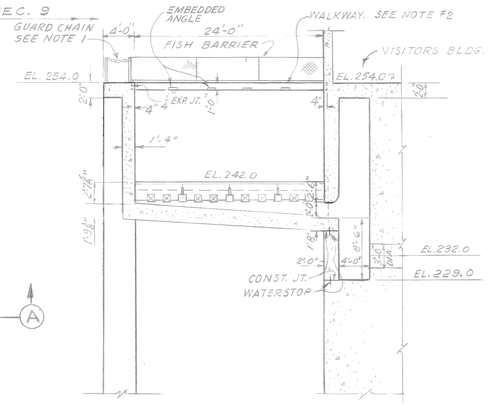

SECTION B

SCALE: 1/8" = 1'-0"

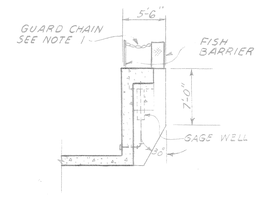

SECTION E

SCALE: 1/8" = 1'-0"

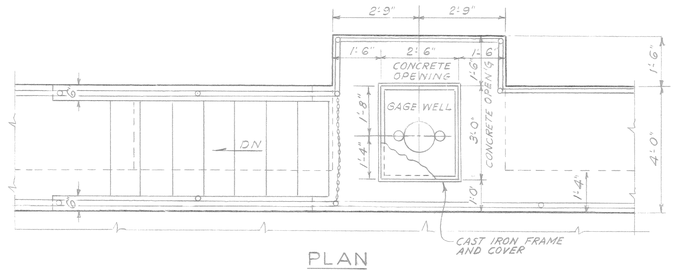

PLAN

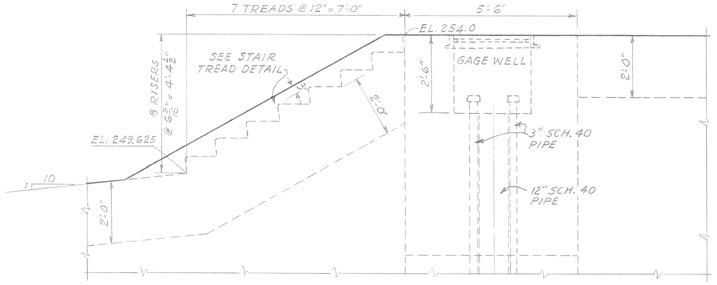

ELEVATION

(FISH BARRIER NOT SHOWN)

NORTH WALL STAIRWAY

SCALE: 1/2" = 1'-0"

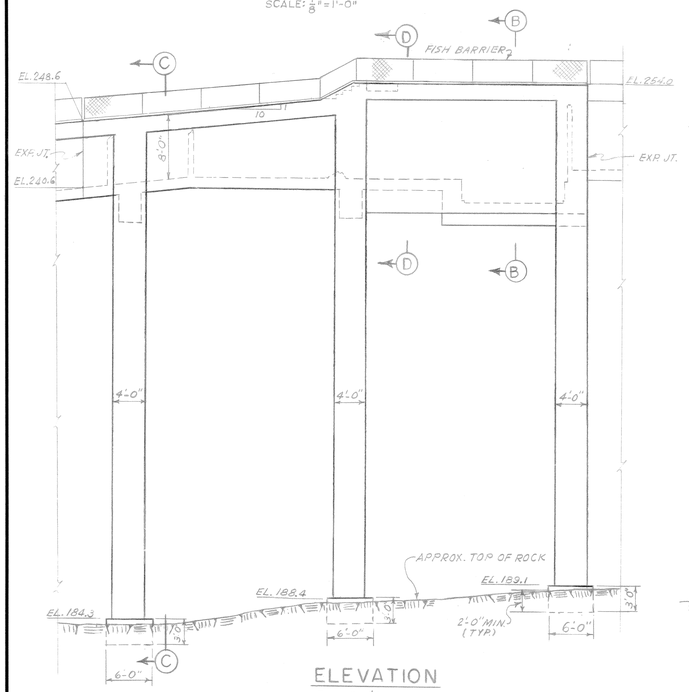

ELEVATION

SCALE: 1/8" = 1'-0"

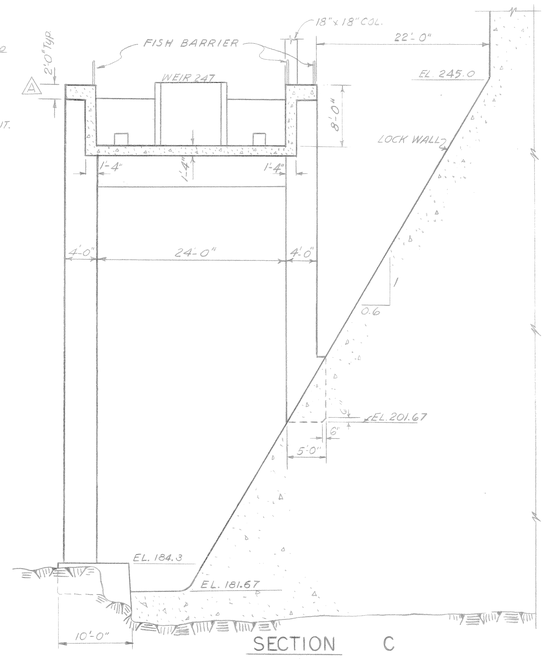

SECTION C

SCALE: 1/8" = 1'-0"

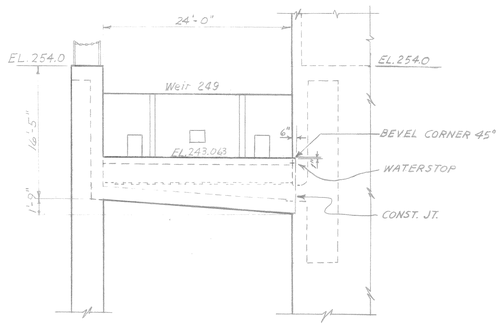

ELEVATION F

SCALE: 1/8" = 1'-0"

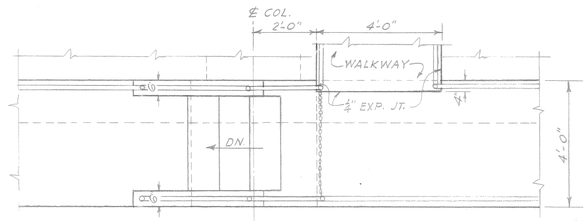

PLAN

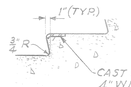

CAST IRON SAFETY TREADS 4" WIDE, 3'-0" LONG BY 3/8" THICK. (TYPICAL) (54)

STAIR TREAD DETAIL

SCALE: 1" = 1'-0"

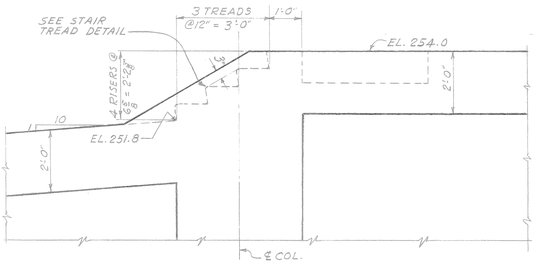

ELEVATION

(FISH BARRIER NOT SHOWN)

SOUTH WALL STAIRWAY

SCALE: 1/2" = 1'-0"

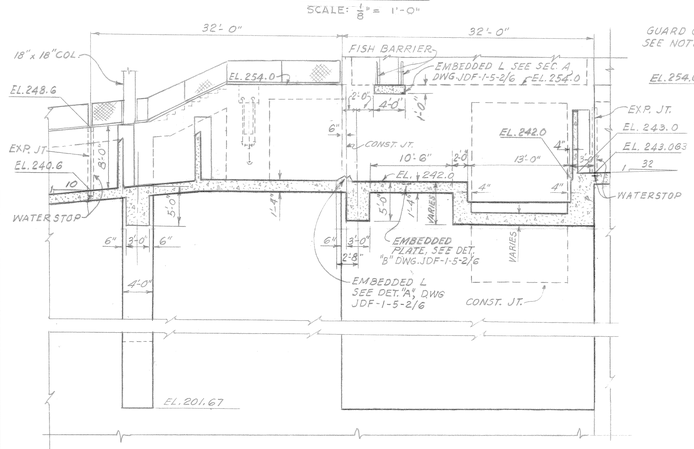

SECTION A

SCALE: 1/8" = 1'-0"

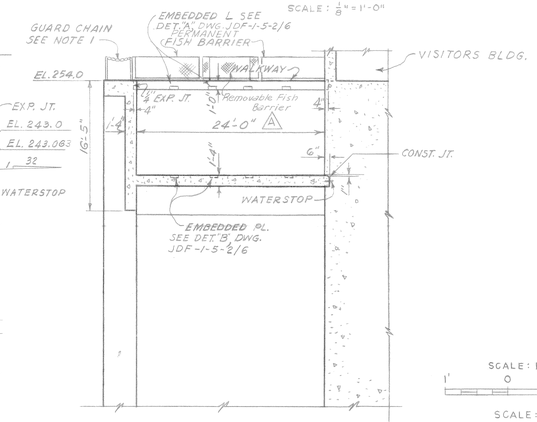

SECTION D

SCALE: 1/8" = 1'-0"

SCALE: 1" = 1'-0"

SCALE: 1 1/2" = 1'-0"

SCALE: 1/8" = 1'-0"

NOTES

1. 1/2" GALV. GUARD CHAIN WITH 5/8" GALV. SWIVEL AND SNAP AT EACH END.
2. CAMBER WALKWAY 1" AT MID-SPAN.
3. FOR GAGE WELL, SEE DWG. JDF-1-3-4/5 VOL. III (A)
4. FOR VISITORS BLDG. DETAILS, SEE DWG. JDN-1-2-15/5
5. FOR FISH COUNTING STATION BULKHEADS AND TRASH RACKS, SEE DWG. JDF-1-5-2/8
6. FOR ADDITIONAL NOTES, SEE DWG. JDF-1-4-2/17.

REVISION	DATE	DESCRIPTION	BY
(A)	2 Feb 65	As Constructed	
(A)	20 Mar 61	Revised sect. 242 on Plan & Elevation F	
(B)	7 Oct 60	Revised diffuser on Plan, Elevation F & Section B	
(A)	16 Oct 59	Revised Fish Barrier on SEC. D & other misc. additions	

U. S. ARMY ENGINEER DISTRICT
WALLA WALLA, WASHINGTON

DESIGNED: E.T.G.
DRAWN: C.O.M. J.A.E.
CHECKED: G.F. T.L.S.
SUPERVISED: KMT Lamey
CHIEF, STRUCT. DES. SEC.

JOHN DAY LOCK AND DAM
COLUMBIA RIVER, OREGON AND WASHINGTON
NORTH SHORE FISH LADDER - I ON 10
SECTION NO. 8
PLAN, ELEVATION & SECTIONS

SUBMITTED: Otto R. Lunn — CHIEF, DESIGN BRANCH
APPROVED: Paul T. Lynch — DATE 1 Sep 59 — COLONEL, C.E. DISTRICT ENGINEER
RECOMMENDED: E. C. Tompkins — CHIEF, ENGINEERING DIVISION
SCALE AS SHOWN — INV. NO. ENG. C-GO-2
FILE NO. JDF-1-4-2/37
SHEET 214

DESIGNED BY U.S. ARMY ENGINEER DISTRICT, SEATTLE
CORPS OF ENGINEERS, SEATTLE, WASHINGTON

PREPARED: Murray Miller — CHIEF, CIVIL WKS. DES. SECTION
ASST. CHIEF, DES. BR., CIVIL WKS.
SUBMITTED: — CHIEF, DESIGN BRANCH
RECOMMENDED: Carroll A. Bradley — CHIEF, ENGINEERING DIVISION
APPROVED: R P Young — DATE 1 AUG 1959 — COLONEL, C.E., DISTRICT ENGINEER

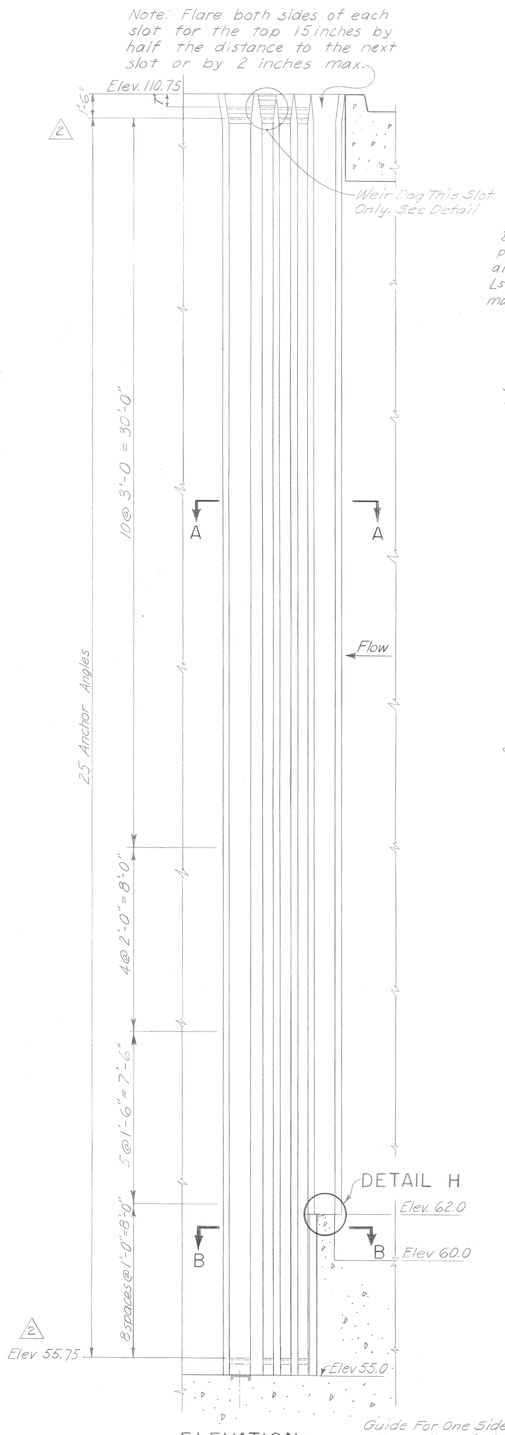

ELEVATION

Scale $\frac{3}{8}$" = 1'-0"

Guide For One Side Of Opening Shown. Other Side Similar And Opposite Hand. Guides Required For Three Openings.

Structural Steel Type II (2)

GUIDES FOR ENTRANCE WEIRS AND STOPLOGS

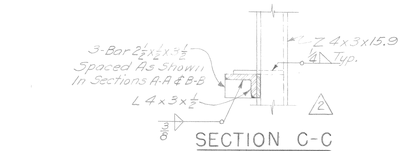

SECTION C-C

Scale 1½" = 1'-0"

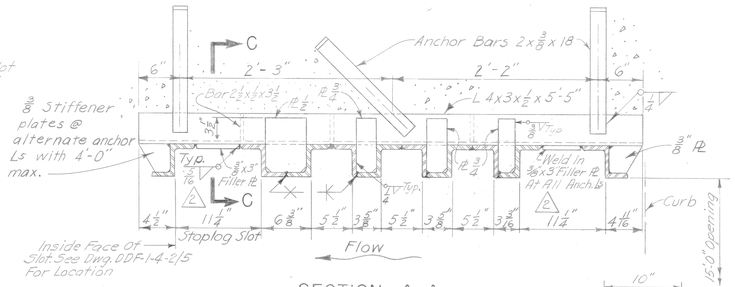

SECTION A-A

Scale 1½" = 1'-0"

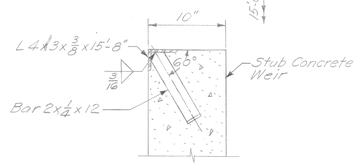

DETAIL H

Scale: 1½" = 1'-0"

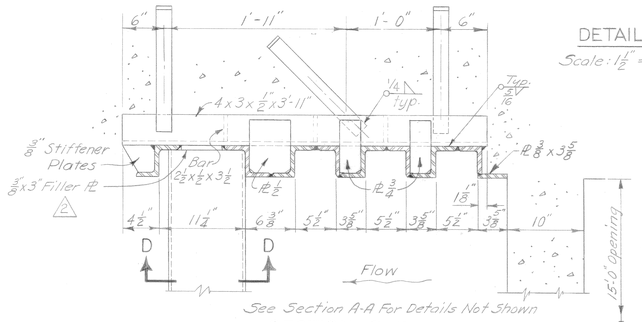

See Section A-A For Details Not Shown

SECTION B-B

Scale 1½" = 1'-0"

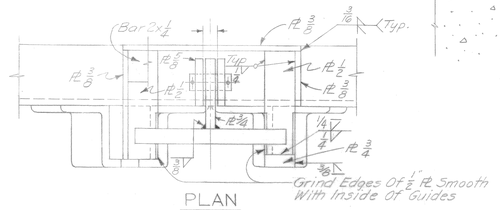

PLAN

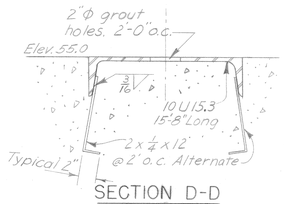

SECTION D-D

Scale 3" = 1'-0"

Note: All Z Bars are 4x3x15.9 All Ls 4x3x½ Unless Shown Otherwise

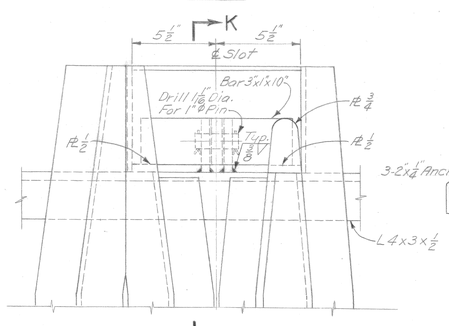

ELEVATION

WEIR DOG DETAIL

Scale: 3" = 1'-0"

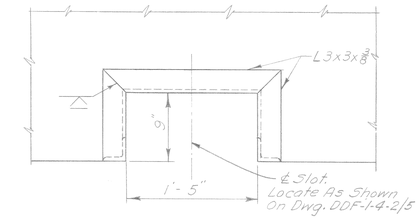

PLAN

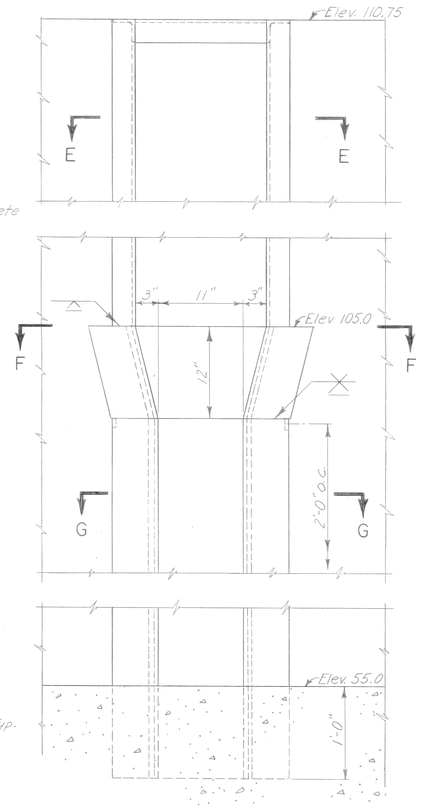

ELEVATION

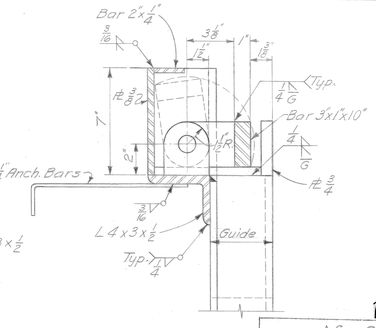

SECTION K-K

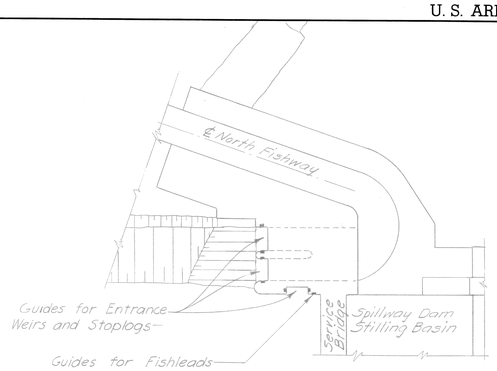

KEY PLAN

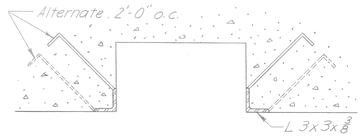

SECTION E-E

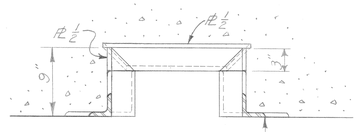

SECTION F-F

50'-0" ± ¼" to opposite guide placed under previous contract. (1)

Note: All anchor bars are 1½x¼x12 spaced @ 2'-0" o.c. except as shown.

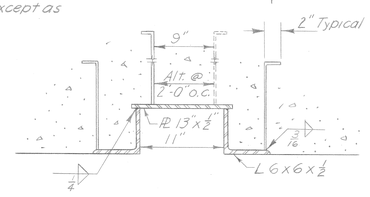

SECTION G-G

Structural Steel Type I One Req'd.

GUIDES FOR FISHLEADS

Scale 1½" = 1'-0"

Notes:

For Structural Steel Notes See Dwg. ——— DDF-1-4-2/29
For Entrance Weirs See Dwg. ——— DDF-1-4-2/36
For Entrance Stoplogs See Dwg. ——— DDF-1-4-2/39
Metal In Guides ——— Item (31)

REVISION	DATE	DESCRIPTION	BY
2	8-5-54	Revised Sec. A, B, C and Elevation	
1	7-16-54	Located fishlead guide in Sec F-F	

CORPS OF ENGINEERS, U. S. ARMY
OFFICE OF THE DISTRICT ENGINEER, PORTLAND, OREGON

DESIGNED: N.T.
DRAWN: V.A.J.
CHECKED: H.E.H.
REVIEWED:
CHIEF, SAFETY BRANCH
SUPERVISED:
CHIEF, STRUCTURES DESIGN SECTION
SUBMITTED:
CHIEF, DESIGN BRANCH
RECOMMENDED:
CHIEF, ENGINEERING DIVISION

THE DALLES DAM
COLUMBIA RIVER — WASHINGTON-OREGON
NORTH FISHWAY
GUIDES AT ENTRANCE

APPROVED: DATE: 2-22-54
COLONEL, C. E. DISTRICT ENGINEER
SCALE AS SHOWN — SPEC. NO.
SHEET 241 OF — DDF-1-4-2/38

DDFS0833.CIT

AS CONSTRUCTED
CONTRACT NO. DA-35 026 eng-20928
CONTRACTOR: Atkinson Construction Co.
DATE OF RECEIPT OF NOTICE TO PROCEED: 24 SEPT. 1954
DATE OF COMPLETION OF CONTRACT: 20 MARCH 1957
DATE OF ACCEPTANCE: 20 MARCH 1957

ARMY—KILHAM STATIONERY & PRINTING CO., PORTLAND, ORE. BRUNING BRUTEX NO. 379W 194237 200 1-53

MICROFILMED Sep 1962

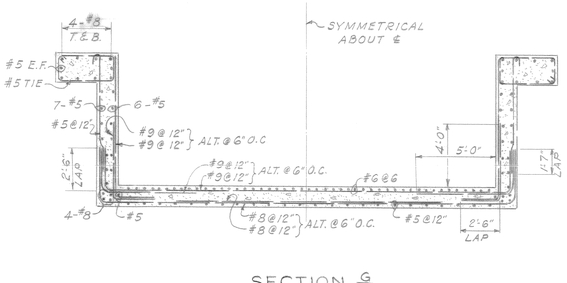

SECTION G/38

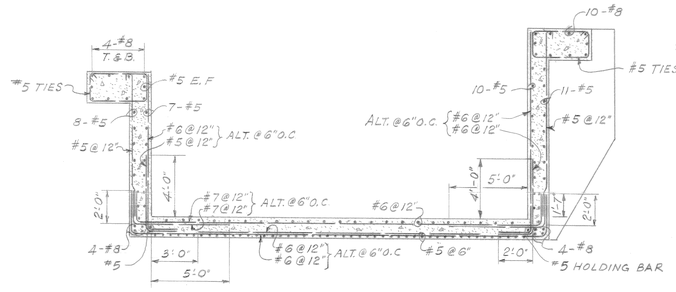

SECTION J/38

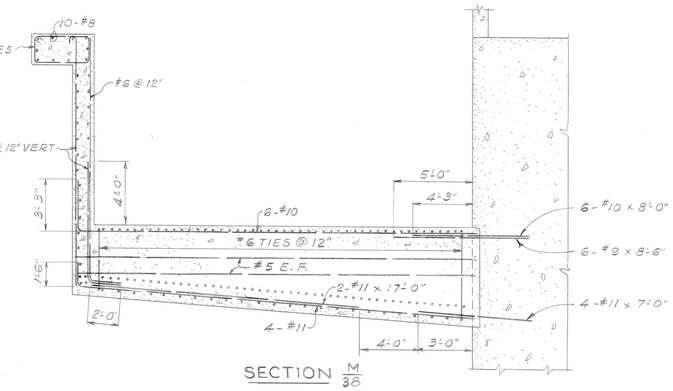

SECTION M/38

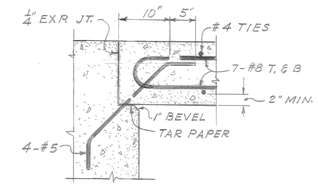

DETAIL "A"
SCALE: 1"=1'-0"

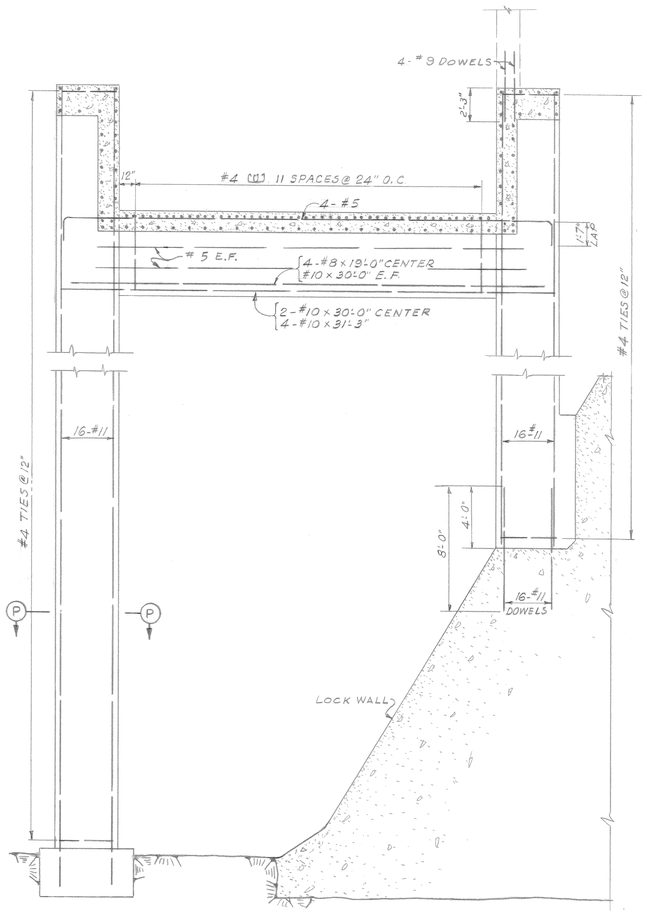

SECTION H/38

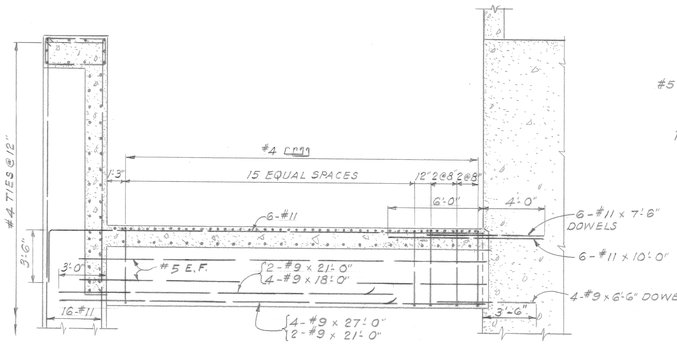

SECTION K/38

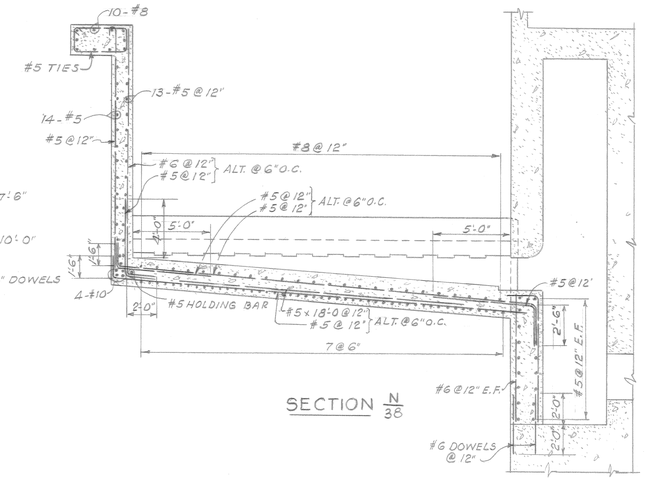

SECTION N/38

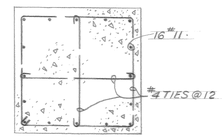

SECTION P/38
SCALE: 1/2"=1'-0"

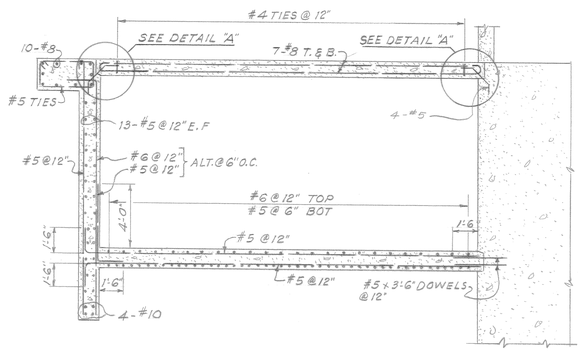

SECTION L/38

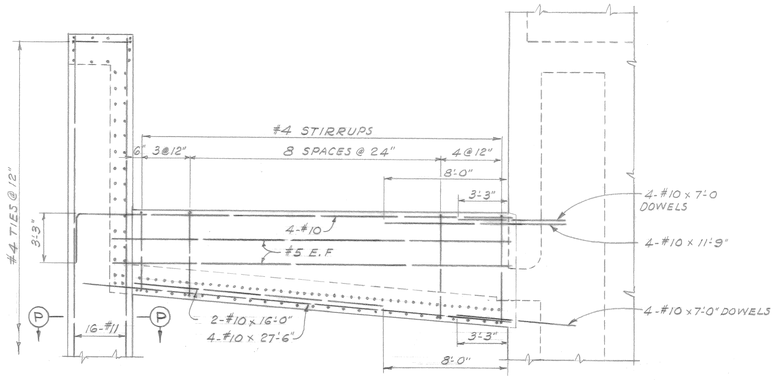

ELEVATION O/38

REVISION	DATE	DESCRIPTION	BY
2	2 Feb 65	As Constructed	EWP
1	7 OCT 60	Revised diffuser floor in Section J/38 & Elevation O/38	EWP

U. S. ARMY ENGINEER DISTRICT
WALLA WALLA, WASHINGTON

DESIGNED: E.T.G.
DRAWN: J.C.G., V.E.C., E.G.B.E.
CHECKED: D.A.S., E.T.I.S.
SUPERVISED: H.W.K. Chief, Struct. Des. Sec.

JOHN DAY LOCK AND DAM
COLUMBIA RIVER, OREGON AND WASHINGTON
NORTH SHORE FISH LADDER—1 ON 10
SECTION NO. 8
REINFORCEMENT II

SUBMITTED: Otto R. Rinn, CHIEF, DESIGN BRANCH
APPROVED: Paul Hammond, COLONEL, C.E. DISTRICT ENGINEER, DATE 1 Sep 59
RECOMMENDED: E. C. Hanzen, CHIEF, ENGINEERING DIVISION
SCALE AS SHOWN
INV. NO. ENG. C-60-2
FILE NO.
SHEET 216
JDF-1-4-2/38

DESIGNED BY U.S. ARMY ENGINEER DISTRICT, SEATTLE
CORPS OF ENGINEERS, SEATTLE, WASHINGTON

PREPARED: Harvey Miller, CHIEF, CIVIL WKS. DES. SECTION
Frank Lauk, ASST. CHIEF, DES. BR., CIVIL WKS.
SUBMITTED: Andrew Steinbrenner, CHIEF, DESIGN BRANCH
RECOMMENDED: Rowe C. Bowling, CHIEF, ENGINEERING DIVISION
APPROVED: R P Young, COLONEL, C.E., DISTRICT ENGINEER, DATE 1 AUG 1959

Filmed VOLUME I CONTRACT 60-150

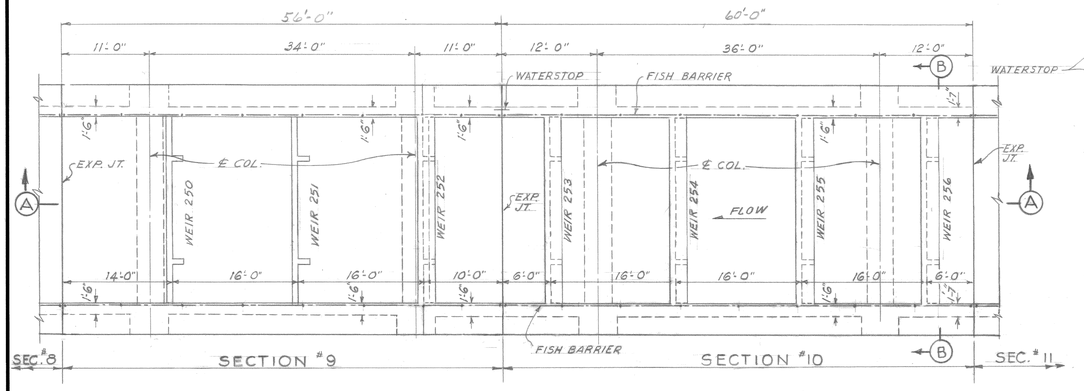

PLAN
SCALE: 1/8" = 1'-0"

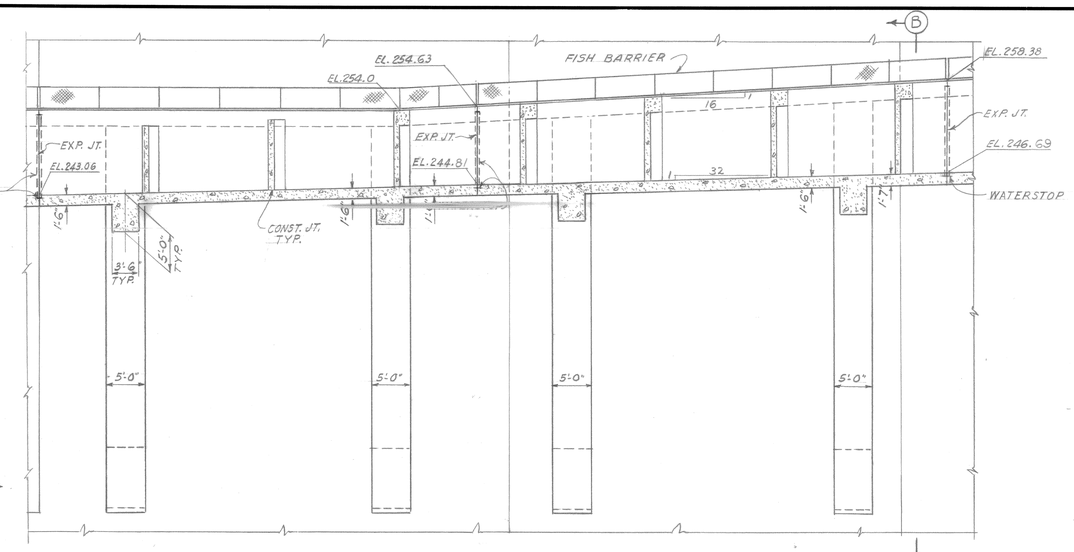

SECTION A
SCALE: 1/8" = 1'-0"

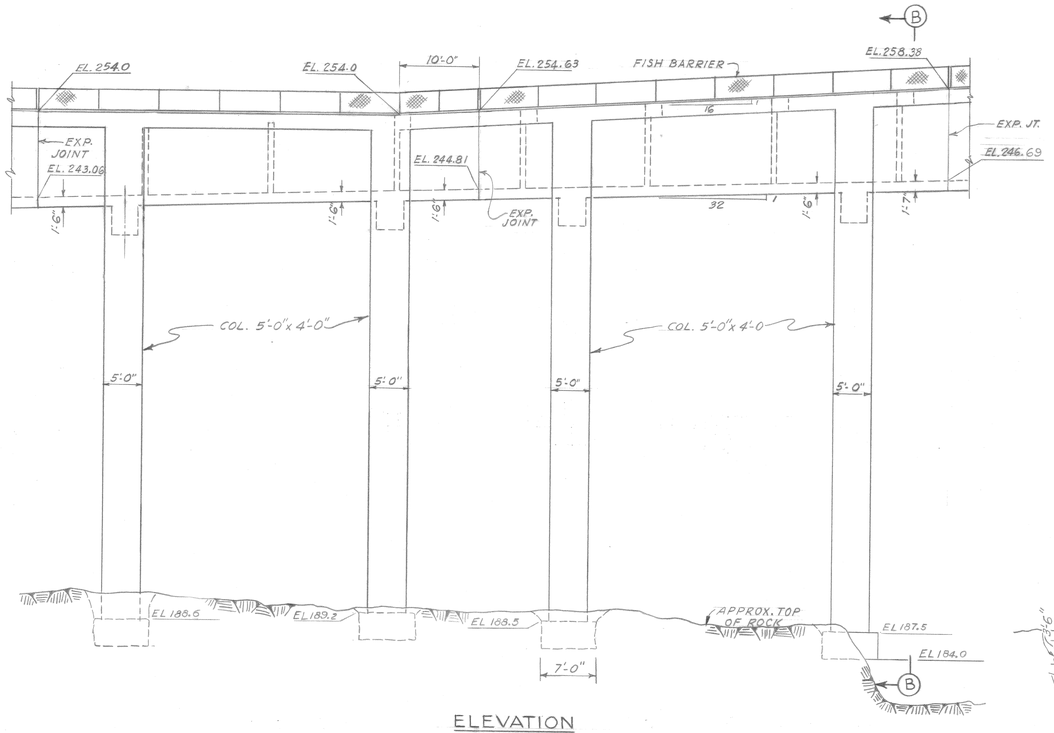

ELEVATION
SCALE: 1/8" = 1'-0"

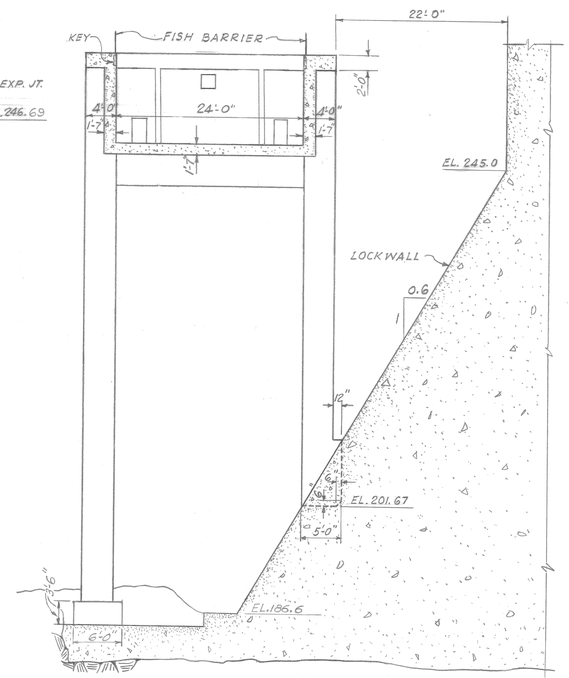

SECTION B
SCALE: 1/8" = 1'-0"

NOTE:
FOR NOTES SEE DWG. JDF-1-4-2/17

SCALE: 1/8" = 1'-0"
5' 0' 5' 10' 15'

REVISION	DATE	DESCRIPTION	BY
2	2 Feb 65	As Constructed	EWP
1	20 APR 61	Revised weirs in Plan & Section B	CHP

U. S. ARMY ENGINEER DISTRICT
WALLA WALLA, WASHINGTON

DESIGNED: E.T.G. G.L.W.
DRAWN: J.A.E.
CHECKED: G.F. T.L.S.
SUPERVISED: CHIEF, STRUCT. DES. SEC.

JOHN DAY LOCK AND DAM
COLUMBIA RIVER, OREGON AND WASHINGTON
NORTH SHORE FISH LADDER-1 ON 10
SECTIONS NOS. 9 & 10
PLAN, ELEVATION & SECTIONS

DESIGNED BY U.S. ARMY ENGINEER DISTRICT, SEATTLE
CORPS OF ENGINEERS, SEATTLE, WASHINGTON

PREPARED: Harvey Miller, CHIEF, CIVIL WKS. DES. SECTION; Frank Lund, ASST. CHIEF, DES. BR., CIVIL WKS.
SUBMITTED: Sydney Stenborn, CHIEF, DESIGN BRANCH
RECOMMENDED: Norris A. Borley, CHIEF, ENGINEERING DIVISION
APPROVED: R P Lyning, COLONEL, C.E., DISTRICT ENGINEER — DATE 1 AUG 1959

SUBMITTED: Otto R. Lunn, CHIEF, DESIGN BRANCH
RECOMMENDED: E. C. Franzen, CHIEF, ENGINEERING DIVISION
APPROVED: Paul H. Lombard, COLONEL, C.E. DISTRICT ENGINEER — DATE 1 Sep 59
SCALE AS SHOWN — INV. NO. ENG. C-60-2
SHEET 217 — FILE NO. JDF-1-4-2/40

Filmed VOLUME 1 CONTRACT 60-150

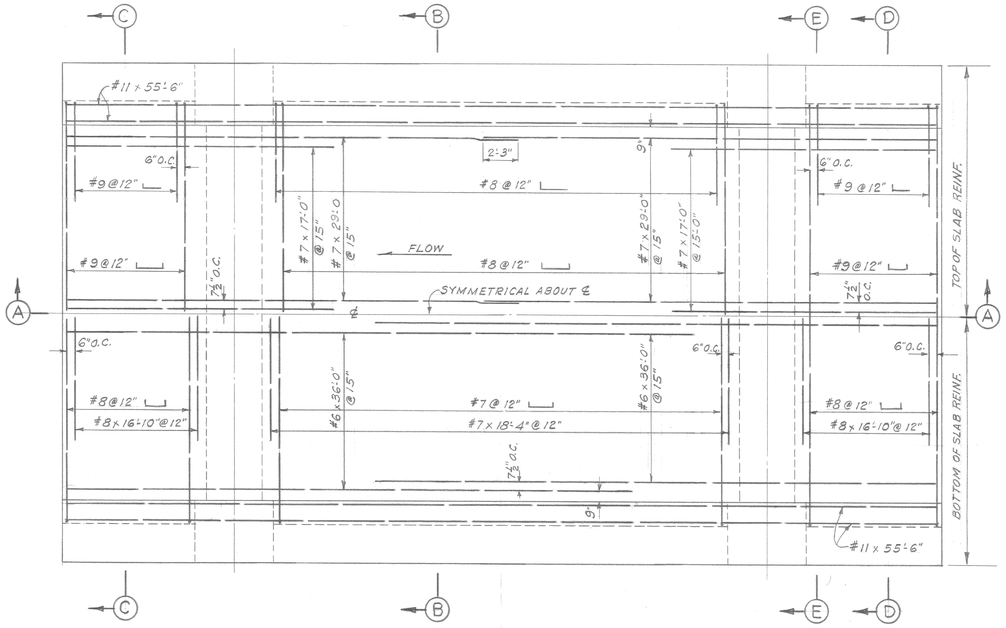

PLAN

SCALE: ¼"=1'-0"

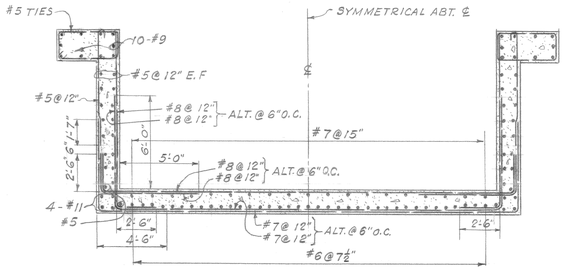

SECTION B

SCALE: ¼"=1'-0"

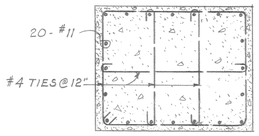

SECTION F

SCALE: ½"=1'-0"

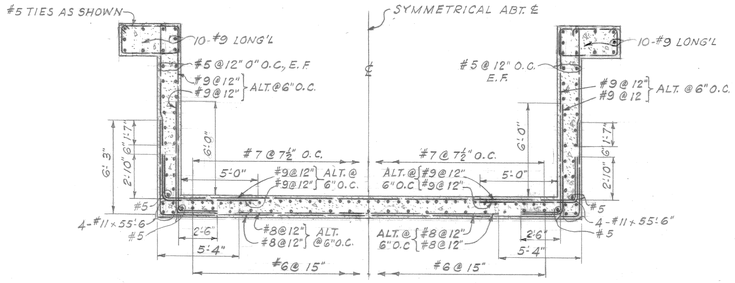

HALF SECTION C HALF SECTION D

SCALE: ¼"=1'-0"

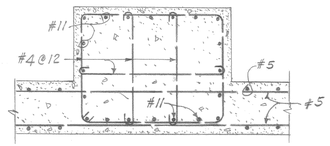

SECTION G

SCALE: ½"=1'-0"

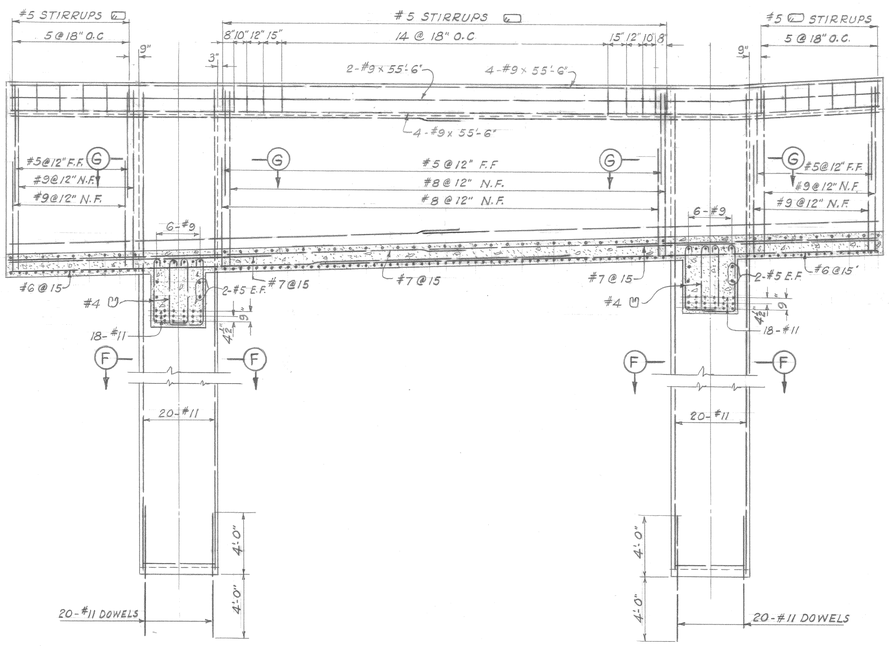

SECTION A

SCALE: ¼"=1'-0"

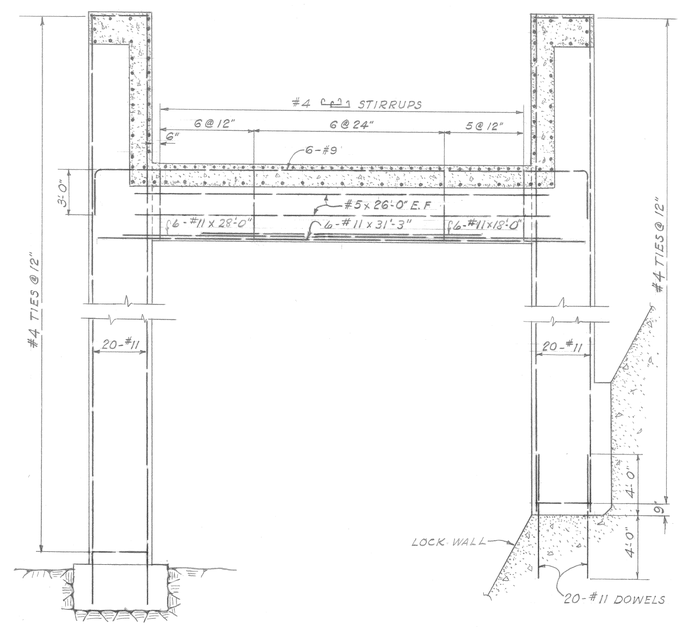

SECTION E

SCALE: ¼"=1'-0"

NOTES:

1. FOR GENERAL NOTES SEE DWG. JDF-1-0-2/1
2. FOR WEIR REINFORCEMENT SEE DWG. JDF-1-4-2/53

SCALE: ¼"=1'-0"

SCALE: ½"=1'-0"

DESIGNED BY U.S. ARMY ENGINEER DISTRICT, SEATTLE
CORPS OF ENGINEERS, SEATTLE, WASHINGTON

PREPARED: Warren Gillis — CHIEF, CIVIL WKS. DES. SECTION
Frank Sanders — ASST. CHIEF, DES. BR., CIVIL WKS.
SUBMITTED: Sydney Steinberg — CHIEF, DESIGN BRANCH
RECOMMENDED: Jerry A. Barsby — CHIEF, ENGINEERING DIVISION
APPROVED: DATE 1 AUG 1959
RP Young — COLONEL, C.E., DISTRICT ENGINEER

REVISION	DATE	DESCRIPTION	BY
2	2 Feb 65	As Constructed	EJR

U.S. ARMY ENGINEER DISTRICT
WALLA WALLA, WASHINGTON

DESIGNED: E.T.G.
DRAWN: E.T.G. J.A.E.
CHECKED: J.C.G. T.L.S.
SUPERVISED: CHIEF, STRUCT. DES. SEC.

JOHN DAY LOCK AND DAM
COLUMBIA RIVER, OREGON AND WASHINGTON
NORTH SHORE FISH LADDER—1 ON 10
SECTION NO. 9
REINFORCEMENT

SUBMITTED: Otto R. Lunn — CHIEF, DESIGN BRANCH
APPROVED: 15 Sep 59 — COLONEL, C.E. DISTRICT ENGINEER
RECOMMENDED: E. C. Dempsey — CHIEF, ENGINEERING DIVISION
SCALE AS SHOWN
INV. NO. ENG. C-G-2-2
SHEET 218
FILE NO. JDF-1-4-2/41

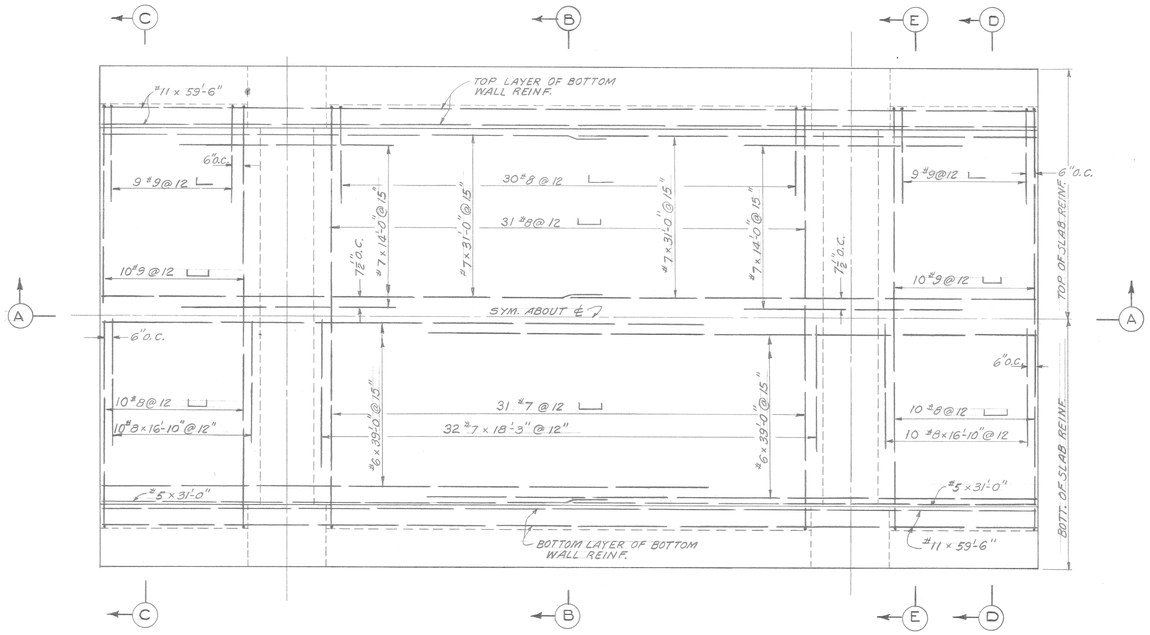

PLAN

SCALE: 1/4" = 1'-0"

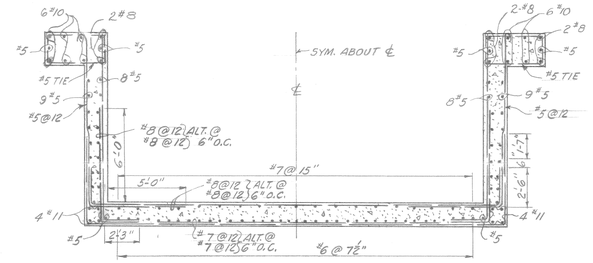

SECTION B

SCALE: 1/4" = 1'-0"

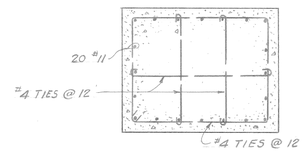

SECTION F

SCALE: 1/2" = 1'-0"

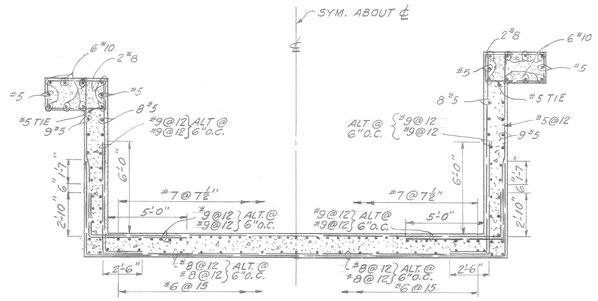

HALF SECTION C HALF SECTION D

SCALE: 1/4" = 1'-0"

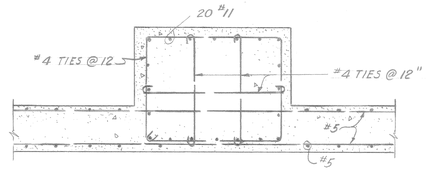

SECTION G

SCALE: 1/2" = 1'-0"

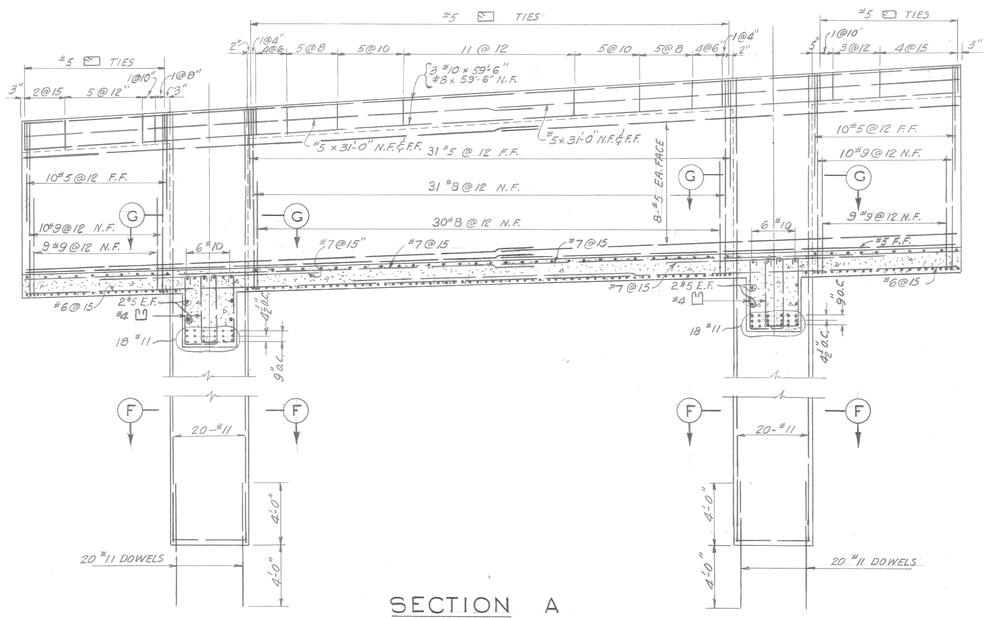

SECTION A

SCALE: 1/4" = 1'-0"

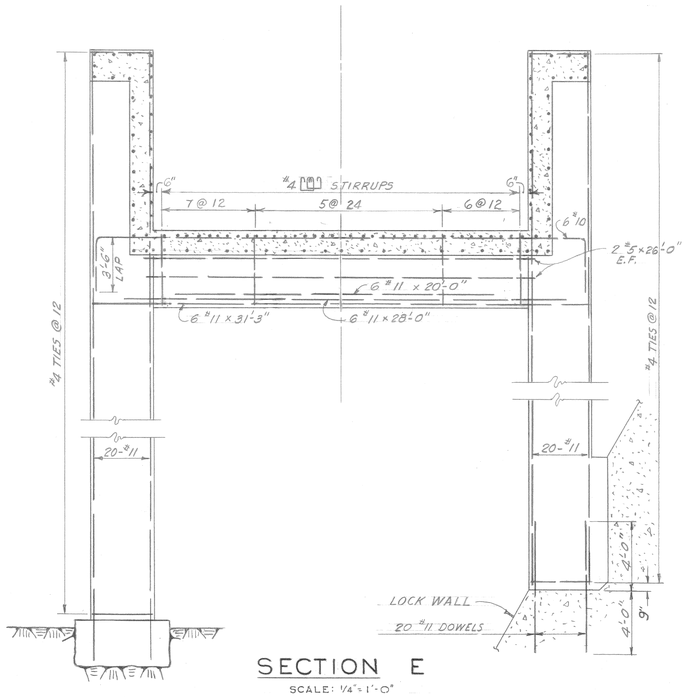

SECTION E

SCALE: 1/4" = 1'-0"

SCALE: 1/4" = 1'-0"

SCALE: 1/2" = 1'-0"

NOTE:
1. FOR GENERAL NOTES SEE DWG. JDF-1-0-2/1
2. FOR WEIR REINFORCEMENT SEE DWG. JDF-1-4-2/53

REVISION	DATE	DESCRIPTION	BY
1	2 Feb 65	As Constructed	EWR

DESIGNED BY U.S. ARMY ENGINEER DISTRICT, SEATTLE
CORPS OF ENGINEERS, SEATTLE, WASHINGTON

PREPARED: Harvey Miller — CHIEF, CIVIL WKS. DES. SECTION
Frank Louk — ASST. CHIEF, DES. BR., CIVIL WKS.
SUBMITTED: Gordon Henderson — CHIEF, DESIGN BRANCH
RECOMMENDED: Norma Bowley — CHIEF, ENGINEERING DIVISION
APPROVED: DATE 1 AUG 1959
R P Young — COLONEL, C.E. DISTRICT ENGINEER

U. S. ARMY ENGINEER DISTRICT
WALLA WALLA, WASHINGTON

DESIGNED: D. L. W.
DRAWN: D.L.W.-C.M.
CHECKED: D.A.S. T.L.S.
SUPERVISED: CHIEF, STRUCT. DES. SEC.

JOHN DAY LOCK AND DAM
COLUMBIA RIVER, OREGON AND WASHINGTON
NORTH SHORE FISH LADDER - 1 ON 10
SECTION NO. 10
REINFORCEMENT

SUBMITTED: Otto R. Lemm — CHIEF, DESIGN BRANCH
APPROVED: Paul H. Wendel — COLONEL, C. E. DISTRICT ENGINEER — DATE 1 Sep 59
RECOMMENDED: E. C. Hansen — CHIEF, ENGINEERING DIVISION
SCALE AS SHOWN — INV. NO. ENG. C-60-2
SHEET 219 — FILE NO. JDF-1-4-2/42

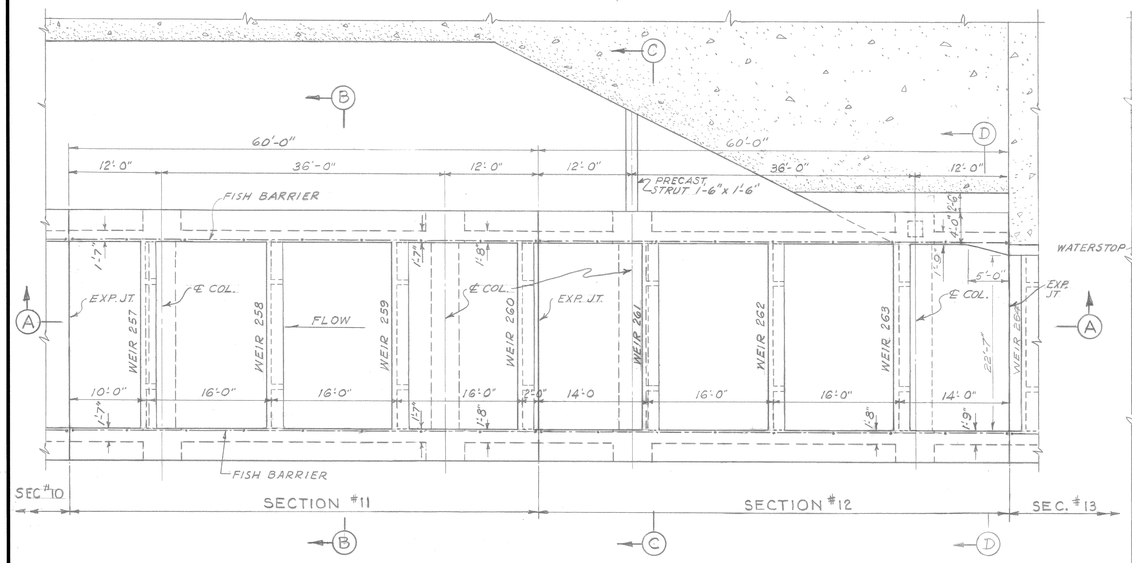

PLAN

SCALE: 1/8" = 1'-0"

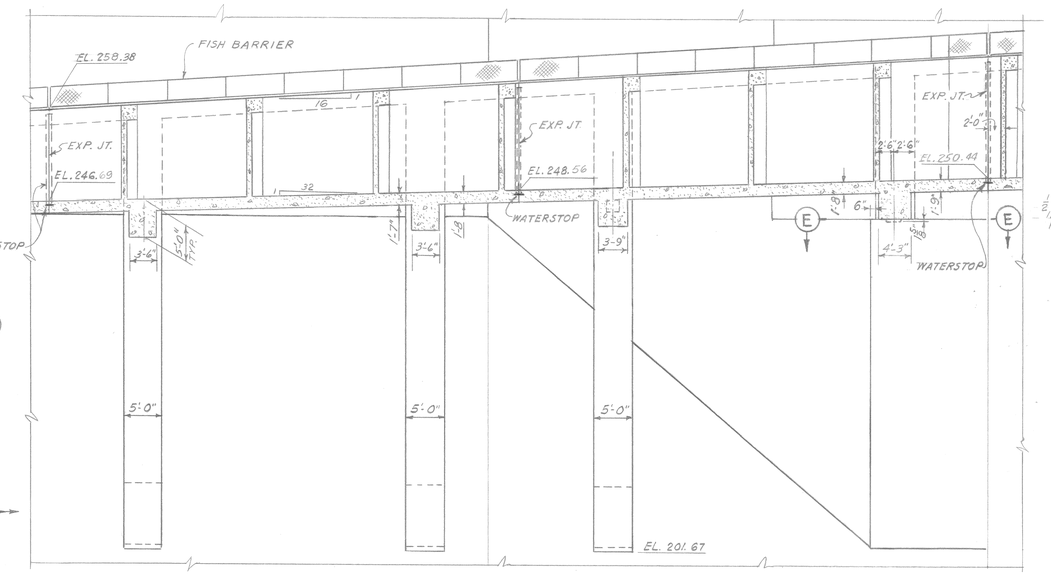

SECTION A

SCALE: 1/8" = 1'-0"

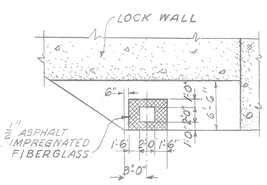

SECTION E-E

SCALE: 1/8" = 1'-0"

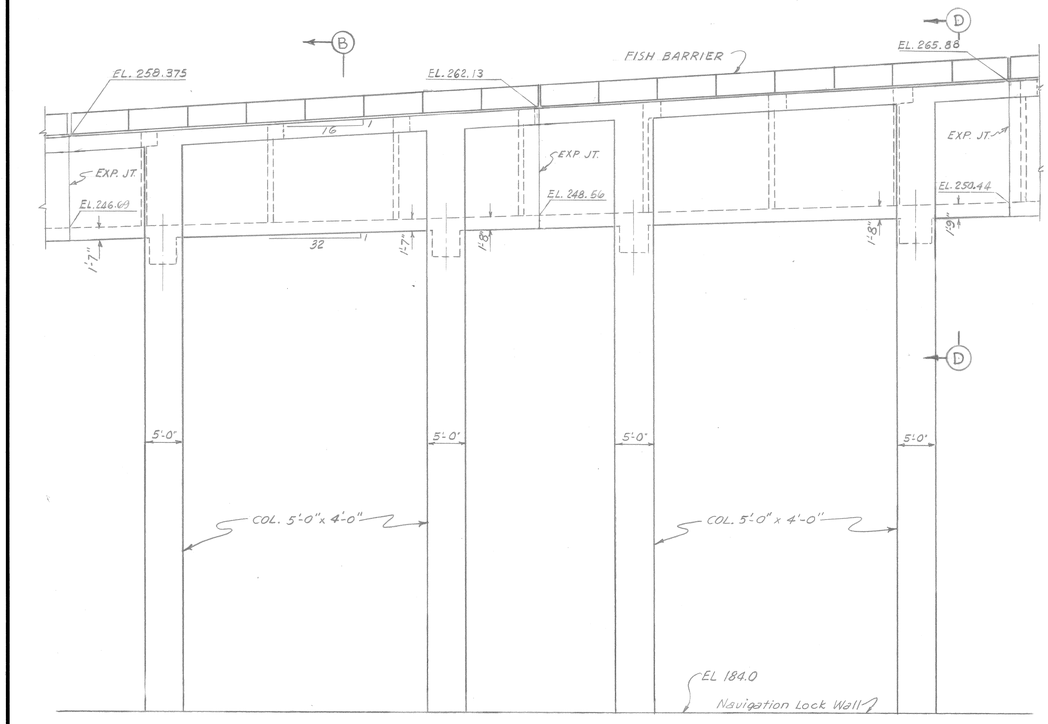

ELEVATION

SCALE: 1/8" = 1'-0"

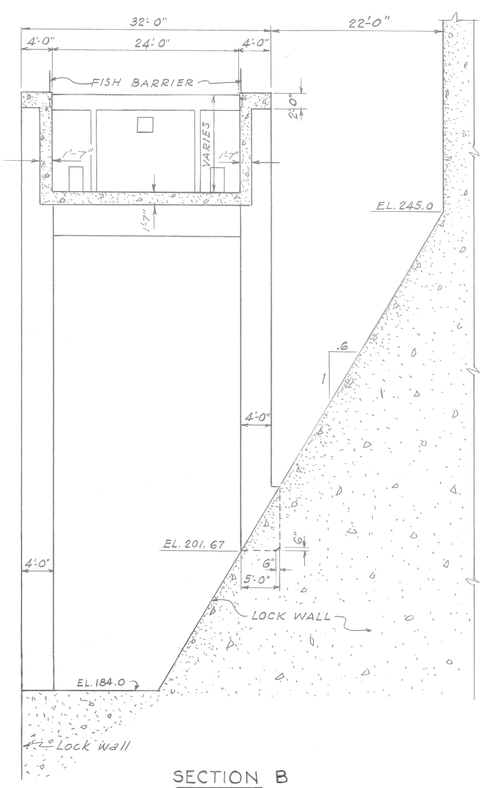

SECTION B

SCALE: 1/8" = 1'-0"

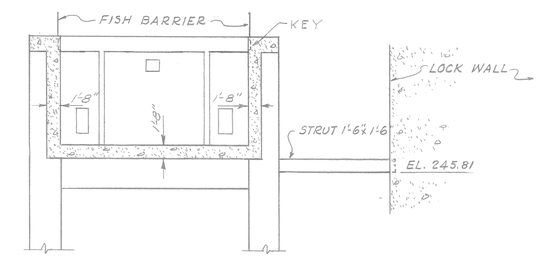

SECTION C

SCALE: 1/8" = 1'-0"

NOTE: FOR REFERENCE DRAWINGS SEE DWG. JDF-1-4-2/17

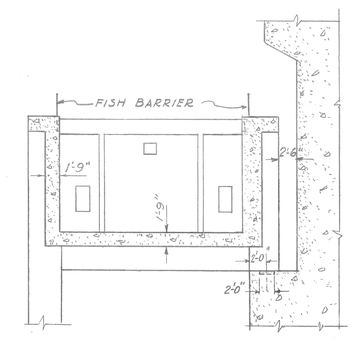

SECTION D

SCALE: 1/8" = 1'-0"

SCALE: 1/8" = 1'-0"

0 5' 10' 15' 20'

REVISION	DATE	DESCRIPTION	BY
C	2 FEB 60	As Constructed	
B	20 APR 61	Revised weirs in Plan & Sections B, C & D	
A	16 Oct 59	Revised note	

DESIGNED BY U.S. ARMY ENGINEER DISTRICT, SEATTLE
CORPS OF ENGINEERS, SEATTLE, WASHINGTON

PREPARED: CHIEF, CIVIL WKS. DES. SECTION — ASST. CHIEF, DES. BR., CIVIL WKS.
SUBMITTED: CHIEF, DESIGN BRANCH
RECOMMENDED: CHIEF, ENGINEERING DIVISION
APPROVED: DATE 1 AUG 1959 — COLONEL, C.E., DISTRICT ENGINEER

U. S. ARMY ENGINEER DISTRICT
WALLA WALLA, WASHINGTON

DESIGNED: E.T.G. J.C.G.
DRAWN: J.A.E.
CHECKED: G.F. T.L.S.
SUPERVISED: CHIEF, STRUCT. DES. SEC.

JOHN DAY LOCK AND DAM
COLUMBIA RIVER, OREGON AND WASHINGTON
NORTH SHORE FISH LADDER - 1 ON 10
SECTIONS NOS. 11 & 12
PLAN, ELEVATION & SECTIONS

SUBMITTED: CHIEF, DESIGN BRANCH
RECOMMENDED: CHIEF, ENGINEERING DIVISION
APPROVED: COLONEL, C.E. DISTRICT ENGINEER — DATE 1 Sep 59
SCALE AS SHOWN — INV. NO. ENG. C-60 2
SHEET 220 — FILE NO. JDF-1-4-2/43

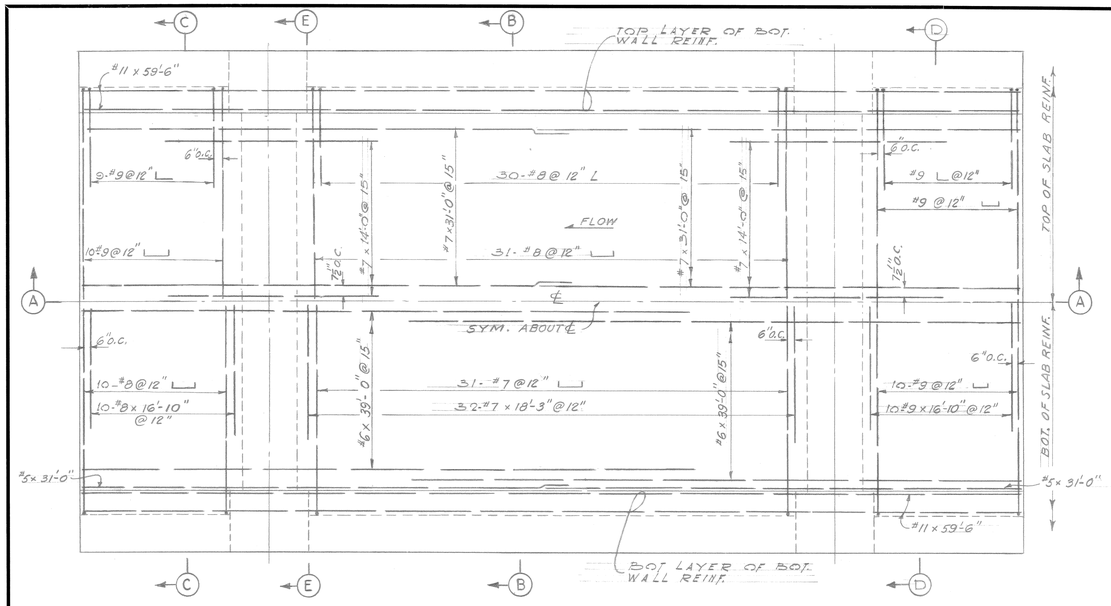

PLAN
SCALE: $\frac{1}{4}$"=1'-0"

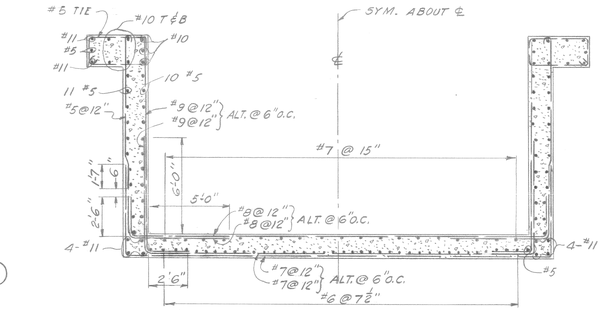

SECTION B
SCALE: $\frac{1}{4}$"=1'-0"

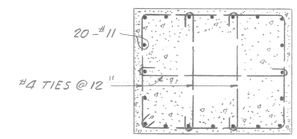

SECTION F
SCALE: $\frac{1}{2}$"=1'-0"

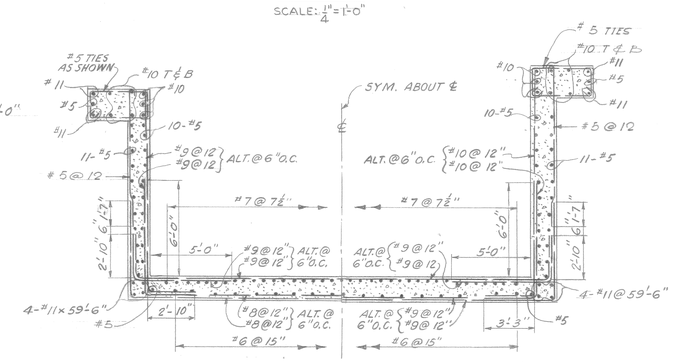

HALF SECTION C HALF SECTION D
SCALE: $\frac{1}{4}$"=1'-0"

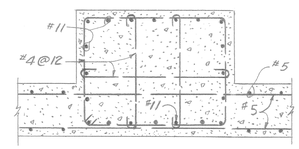

SECTION G
SCALE: $\frac{1}{2}$"=1'-0"

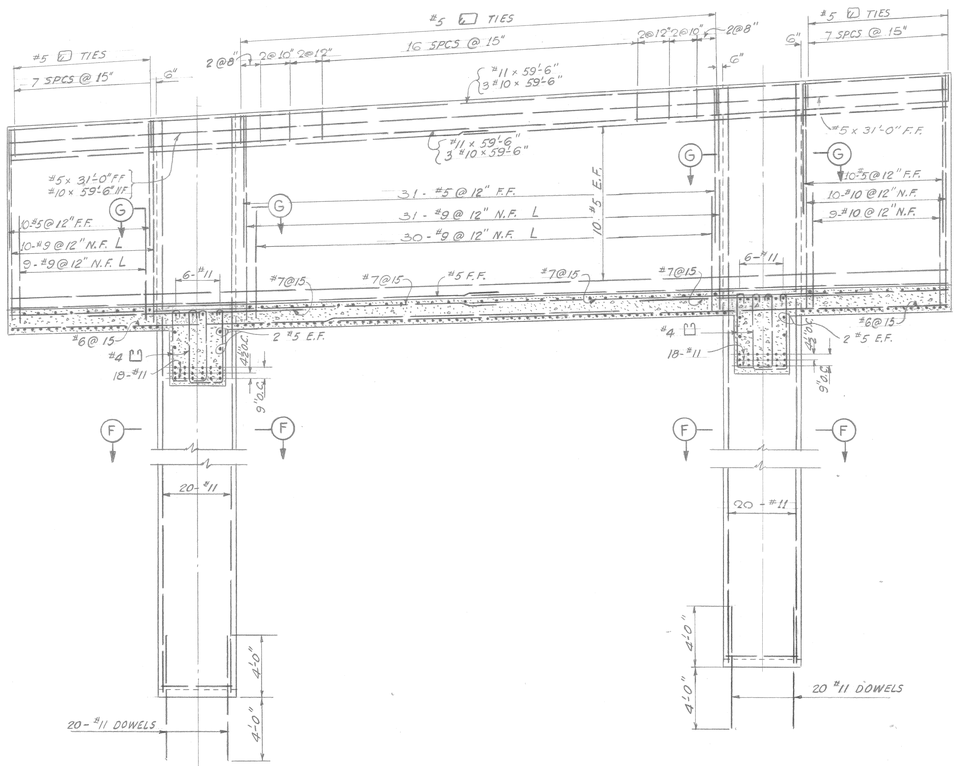

SECTION A
SCALE: $\frac{1}{4}$"=1'-0"

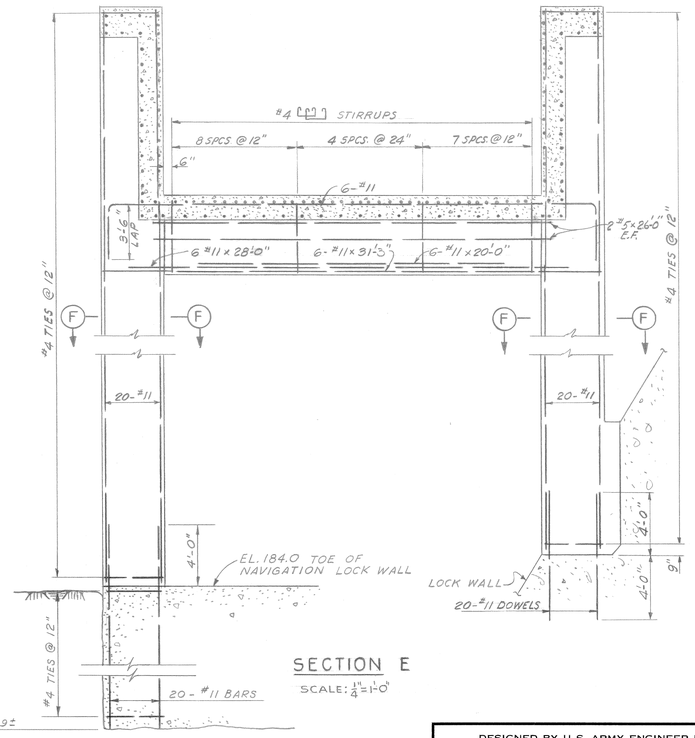

SECTION E
SCALE: $\frac{1}{4}$"=1'-0"

SCALE: $\frac{1}{2}$"=1'-0"

SCALE: $\frac{1}{4}$"=1'-0"

NOTE:
1. FOR GENERAL NOTES SEE DWG. JDF-1-0-2/1
2. FOR WEIR REINFORCEMENT SEE DWG. JDF-1-4-2/53

REVISION	DATE	DESCRIPTION	BY
2	2 Feb 65	As Constructed	EWR

U. S. ARMY ENGINEER DISTRICT
WALLA WALLA, WASHINGTON

DESIGNED: E.T.G.
DRAWN: E.T.G. C.M.
CHECKED: J.C.G. T.L.S.
SUPERVISED: CHIEF, STRUCT. DES. SEC.

JOHN DAY LOCK AND DAM
COLUMBIA RIVER, OREGON AND WASHINGTON
NORTH SHORE FISH LADDER - 1 ON 10
SECTION NO. 11
REINFORCEMENT

SUBMITTED: CHIEF, DESIGN BRANCH
APPROVED: COLONEL, C.E. DISTRICT ENGINEER — DATE 1 Sep 59
RECOMMENDED: CHIEF, ENGINEERING DIVISION
SCALE AS SHOWN
INV. NO. ENG. C-GO-2
FILE NO. JDF-1-4-2/44
SHEET 221

DESIGNED BY U.S. ARMY ENGINEER DISTRICT, SEATTLE
CORPS OF ENGINEERS, SEATTLE, WASHINGTON

PREPARED: CHIEF, CIVIL WKS. DES. SECTION
ASST. CHIEF, DES. BR., CIVIL WKS.
SUBMITTED: CHIEF, DESIGN BRANCH
RECOMMENDED: CHIEF, ENGINEERING DIVISION
APPROVED: DATE 1 AUG 1959
COLONEL, C.E., DISTRICT ENGINEER

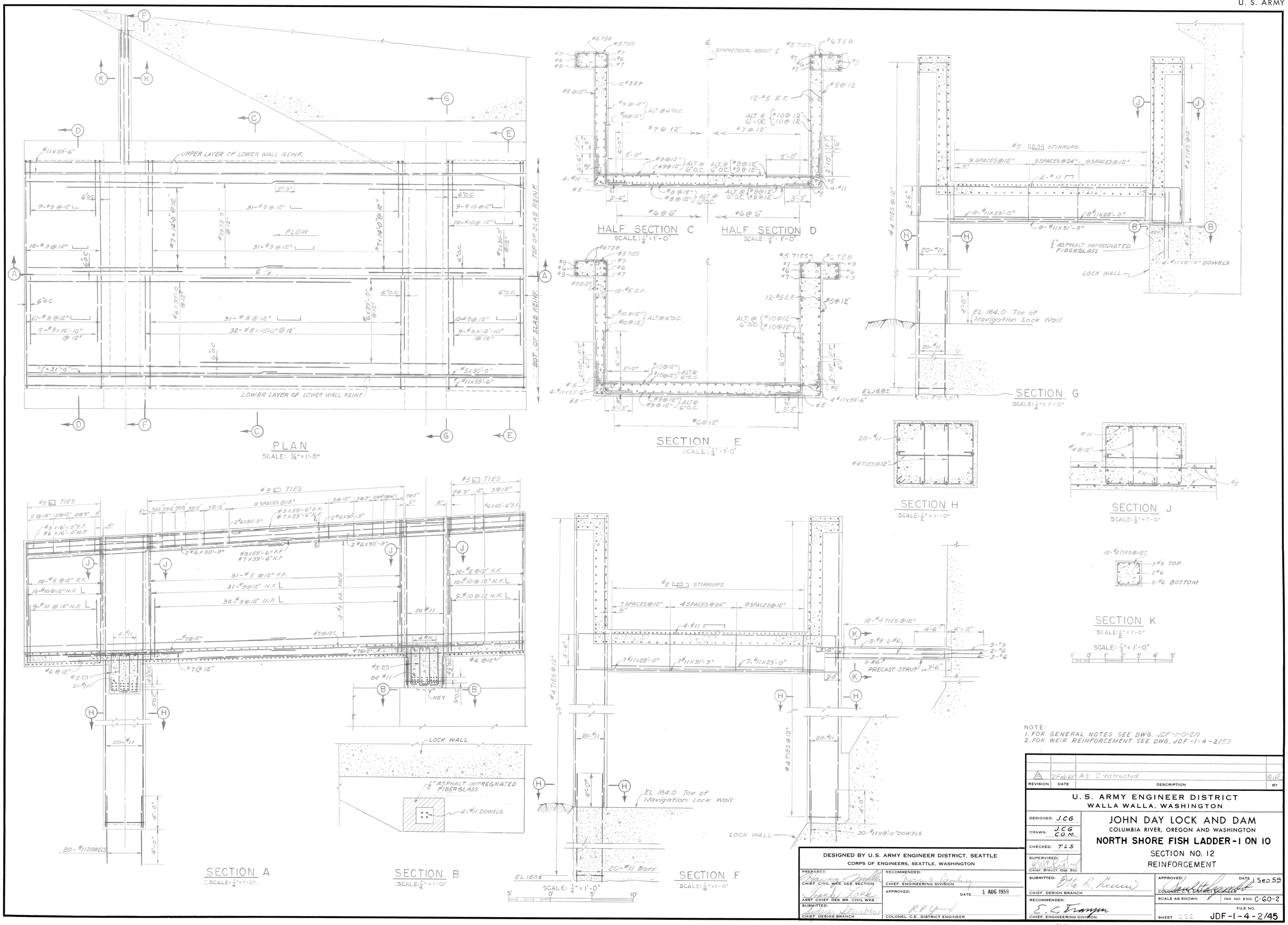

NOTE:
1. FOR GENERAL NOTES SEE DWG. JDF-1-0-2/1
2. FOR WEIR REINFORCEMENT SEE DWG. JDF-1-4-2/53

REVISION	DATE	DESCRIPTION	BY
A	2 Feb 65	As Constructed	

U. S. ARMY ENGINEER DISTRICT
WALLA WALLA, WASHINGTON

DESIGNED: J.C.G.
DRAWN: J.C.G. C.O.M.
CHECKED: T.L.S.
SUPERVISED: H.W. Eliston, CHIEF, STRUCT. DES. SEC.

JOHN DAY LOCK AND DAM
COLUMBIA RIVER, OREGON AND WASHINGTON
NORTH SHORE FISH LADDER - 1 ON 10
SECTION NO. 12
REINFORCEMENT

SUBMITTED: Otto R. Lunn, CHIEF, DESIGN BRANCH
APPROVED: Paul H. Lynch, COLONEL, C.E. DISTRICT ENGINEER, DATE 1 Sep 59
RECOMMENDED: E. C. Franzen, CHIEF, ENGINEERING DIVISION
SCALE AS SHOWN
INV. NO. ENG. C-60-2
SHEET 222
FILE NO. JDF-1-4-2/45

DESIGNED BY U.S. ARMY ENGINEER DISTRICT, SEATTLE
CORPS OF ENGINEERS, SEATTLE, WASHINGTON

PREPARED: Harvey Miller, CHIEF, CIVIL WKS. DES. SECTION; Frank Kaul, ASST. CHIEF, DES. BR., CIVIL WKS.
RECOMMENDED: Norman A. Bailey, CHIEF, ENGINEERING DIVISION
APPROVED: DATE 1 AUG 1959
SUBMITTED: Sydney Steinberg, CHIEF, DESIGN BRANCH; R P Young, COLONEL, C.E., DISTRICT ENGINEER

Filmed VOLUME 1 CONTRACT 60-150

CORPS OF ENGINEERS

U. S. ARMY

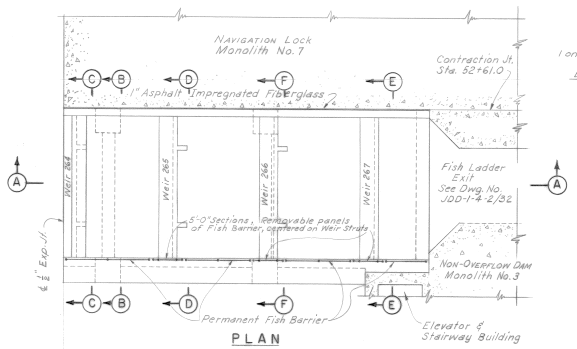

PLAN

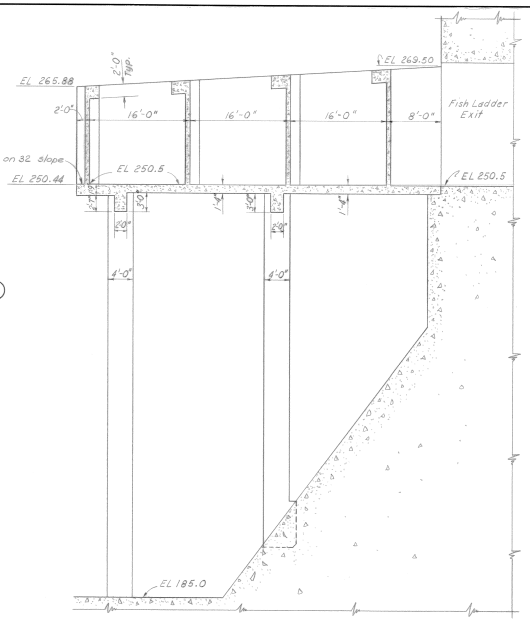

SECTION A

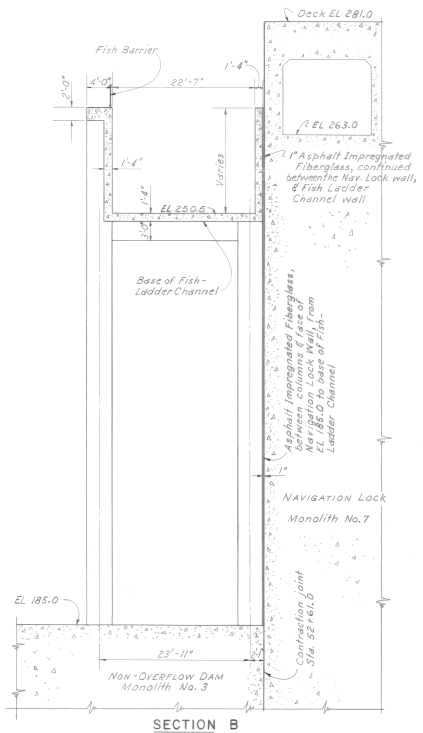

SECTION B

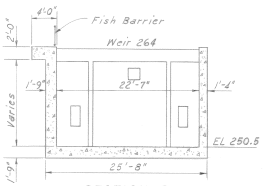

SECTION C

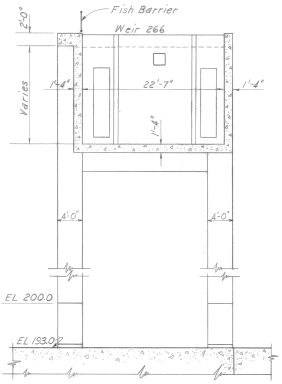

SECTION F

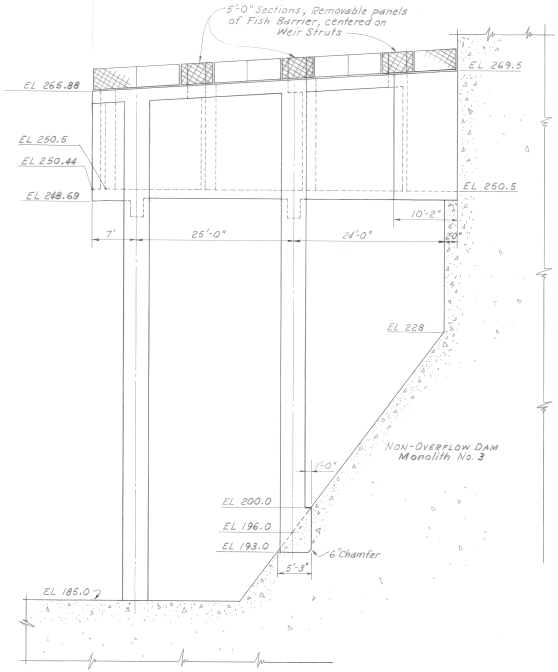

ELEVATION

SCALE IN FEET

8 0 8 16 24

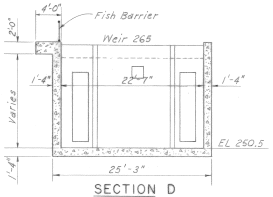

SECTION D

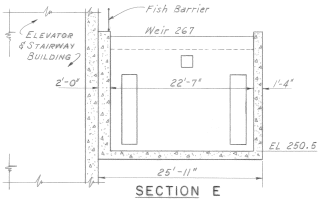

SECTION E

SECTIONS A THRU F

SCALE IN FEET

8 0 8 16 24

REFERENCE DRAWINGS:

General Notes, Concrete and Reinforcement Notes, Structural Steel Notes and Legend — — — — — — — — — JDF-1-0-2/1
Weir — — — — — — — — — — — — — — — JDF-1-4-2/34
Waterstops — — — — — — — — — — — — JDF-1-4-2/36
Handrail and Fish Barrier — — — — — — JDF-1-5-2/10

REVISION	DATE	DESCRIPTION	BY
2	2 FEB 65	AS CONSTRUCTED	
1	20 APR 61	Revised welds	

U. S. ARMY ENGINEER DISTRICT
WALLA WALLA, WASHINGTON

JOHN DAY LOCK AND DAM
COLUMBIA RIVER, OREGON AND WASHINGTON
NORTH SHORE FISH LADDER-1 ON 10
SECTION NO. 13
CONCRETE OUTLINE
PLAN, ELVATIONS AND SECTIONS

DESIGNED: PERKINS
DRAWN: T. R. Jr.
CHECKED: EYESTONE
PREPARED: CHIEF, STRUCT. DES. SECT.
SUBMITTED: CHIEF, DESIGN BRANCH
RECOMMENDED: CHIEF, ENGINEERING DIVISION
APPROVED: COLONEL, C. E. DISTRICT ENGINEER
DATE: SEP. 55
SCALE AS SHOWN
INV. NO. ENG. C-GO-2
SHEET 223
FILE NO. JDF-1-4-2/46

Filmed VOLUME 1 CONTRACT 60-150

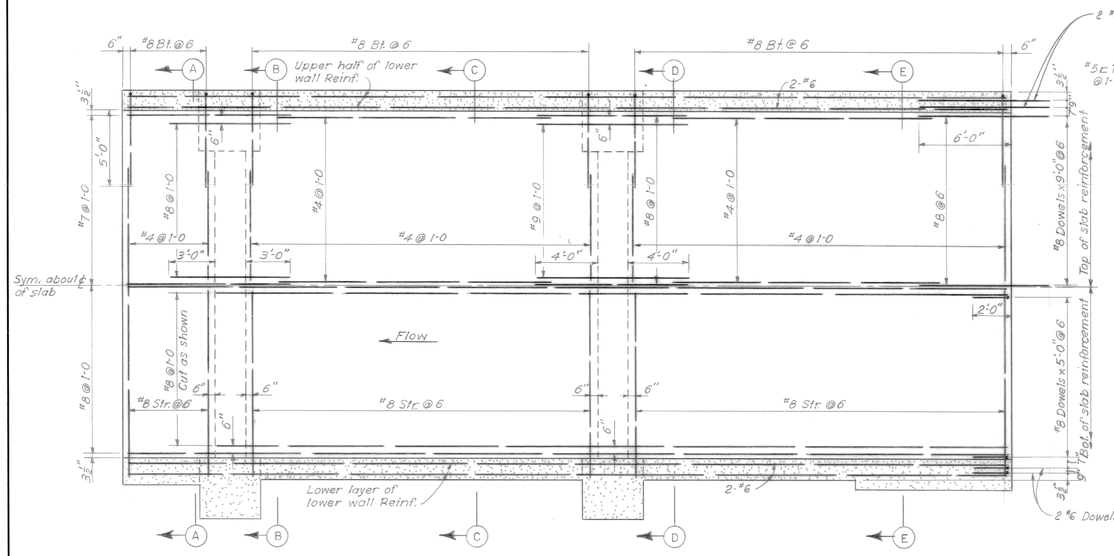

PLAN – TOP OF CHANNEL SLAB

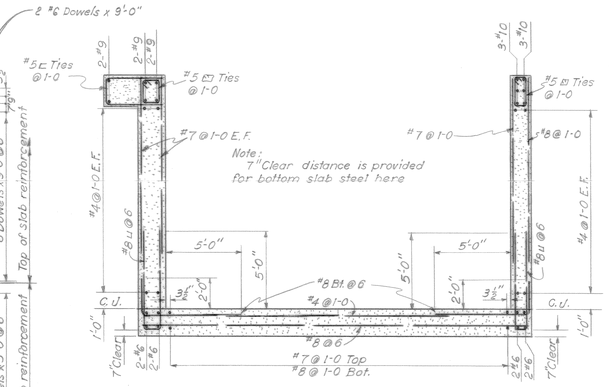

SECTION A

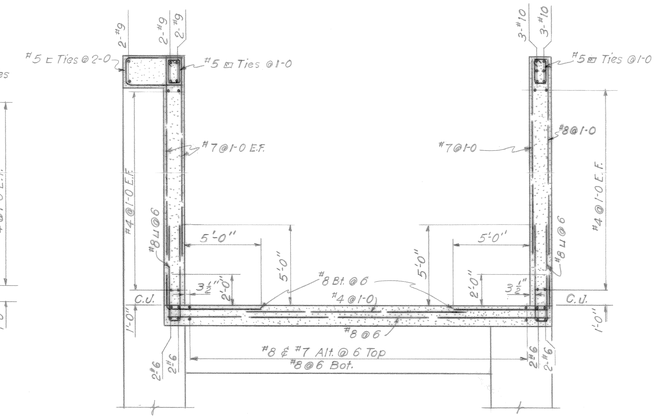

SECTION B

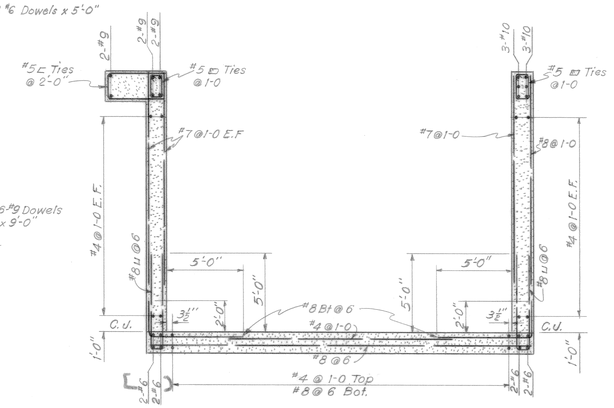

SECTION C

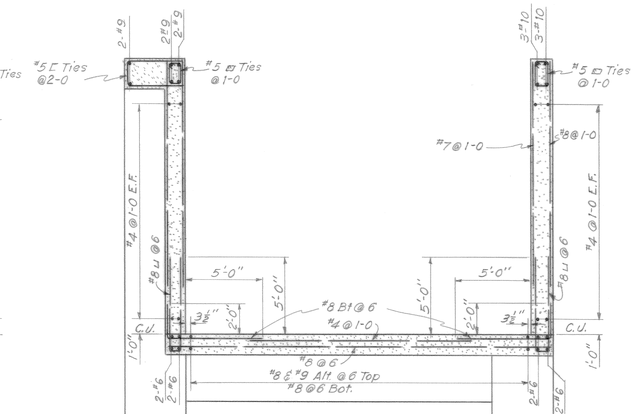

SECTION D

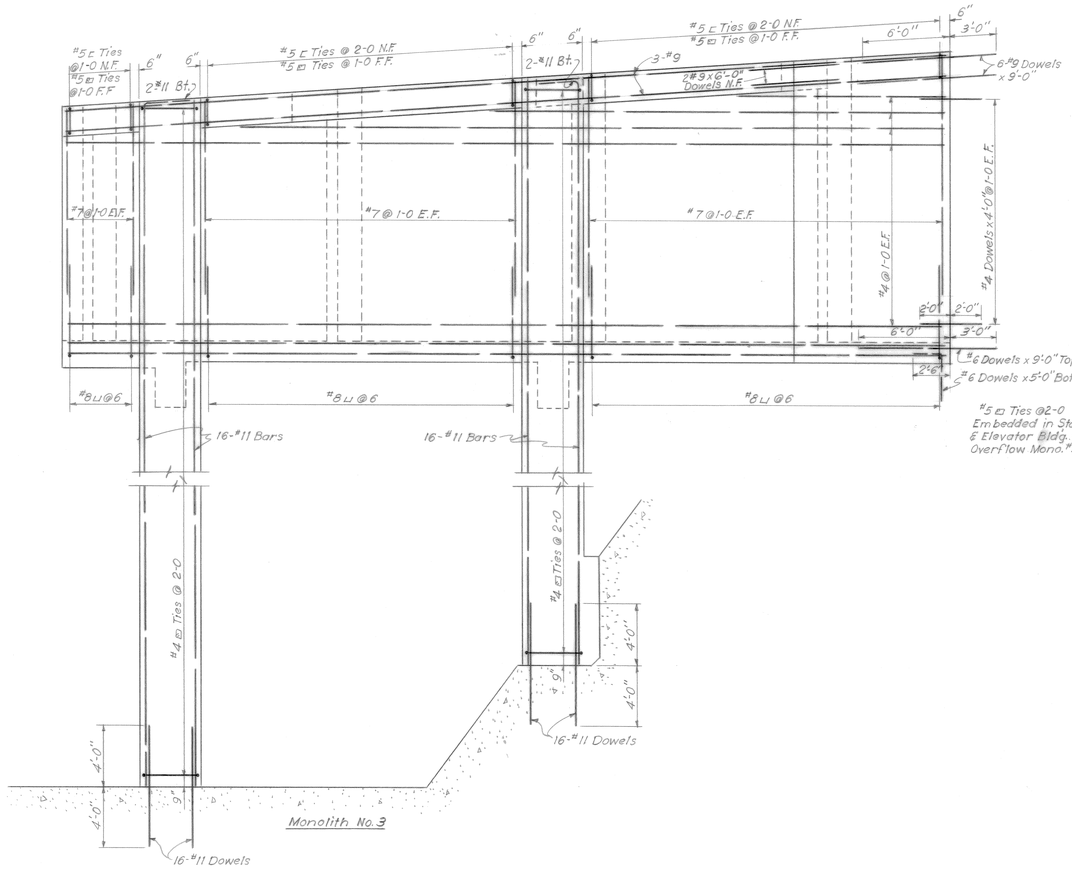

ELEVATION

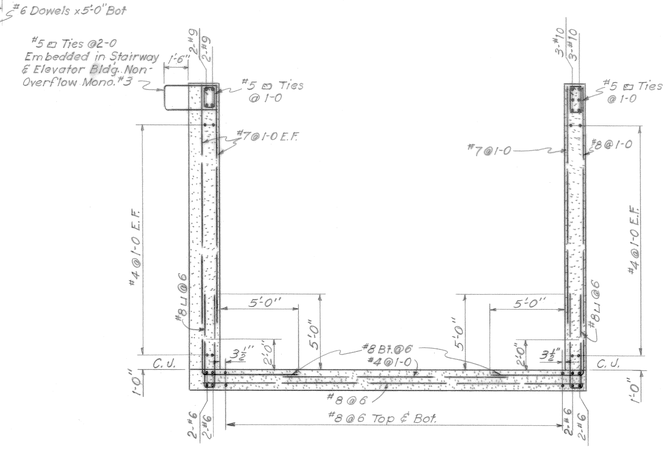

SECTION E

REFERENCE DRAWING

General Notes, Concrete Notes, Reinforcement Notes, Structural Steel Notes and Legend ---UDF-1-0-2/1

SCALE IN FEET 4 0 4 8 12

REVISION	DATE	DESCRIPTION	BY
2	2 Feb 65	AS CONSTRUCTED	
1	20 APR 61	Revised reinforcement	

U. S. ARMY ENGINEER DISTRICT
WALLA WALLA, WASHINGTON

DESIGNED: J. Perkins
DRAWN: E. Sarns
CHECKED: R. Eyestone
PREPARED: CHIEF, STRUCT. DES. SECT.

JOHN DAY LOCK AND DAM
COLUMBIA RIVER, OREGON AND WASHINGTON
NORTH SHORE FISH LADDER I ON 10
SECTION NO. 13
REINFORCEMENT I

SUBMITTED: CHIEF, DESIGN BRANCH
RECOMMENDED: CHIEF, ENGINEERING DIVISION
APPROVED: COLONEL, C. E. DISTRICT ENGINEER
DATE 1 Sep 59
SCALE AS SHOWN
INV. NO. ENG. C-20-2
FILE NO.
SHEET 224
JDF-1-4-2/47

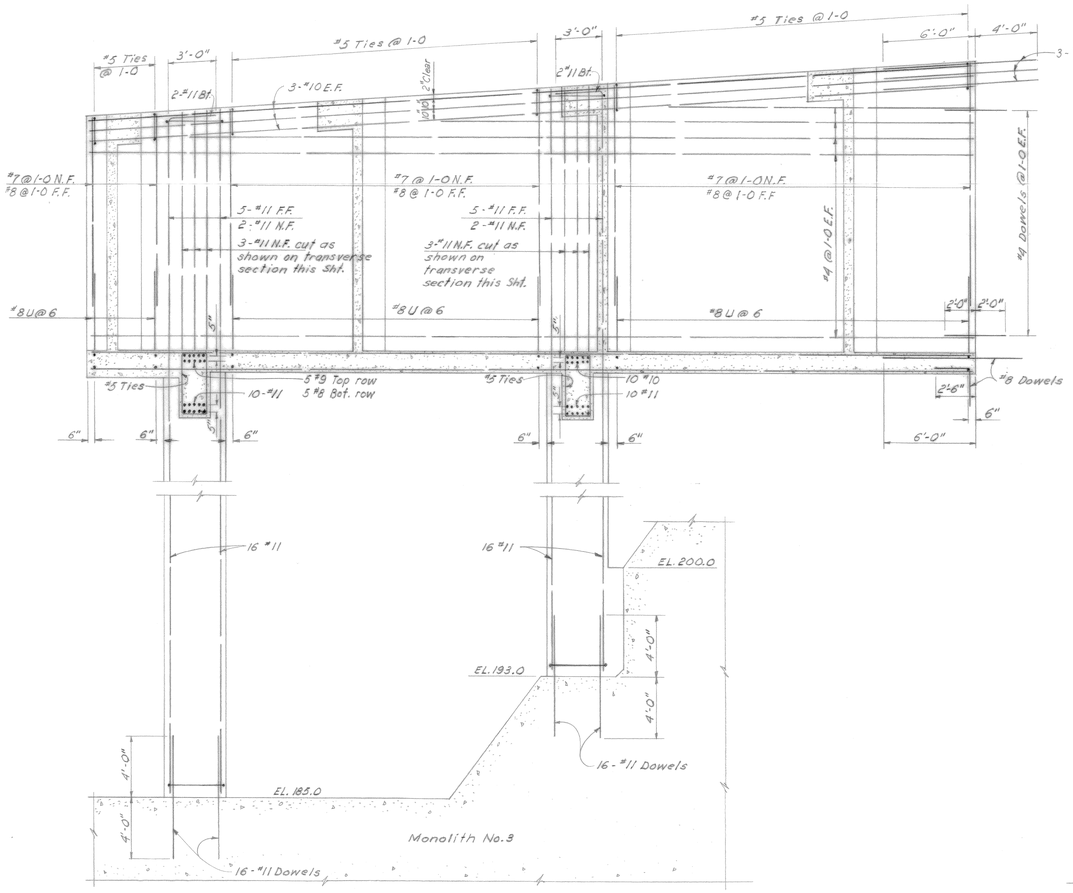

LONGITUDINAL SECTION

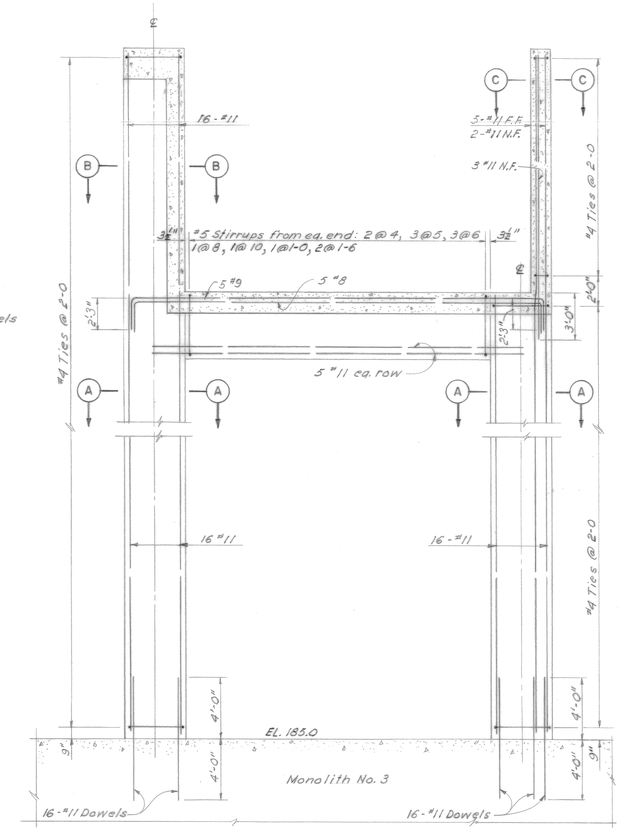

TRANSVERSE SECTION

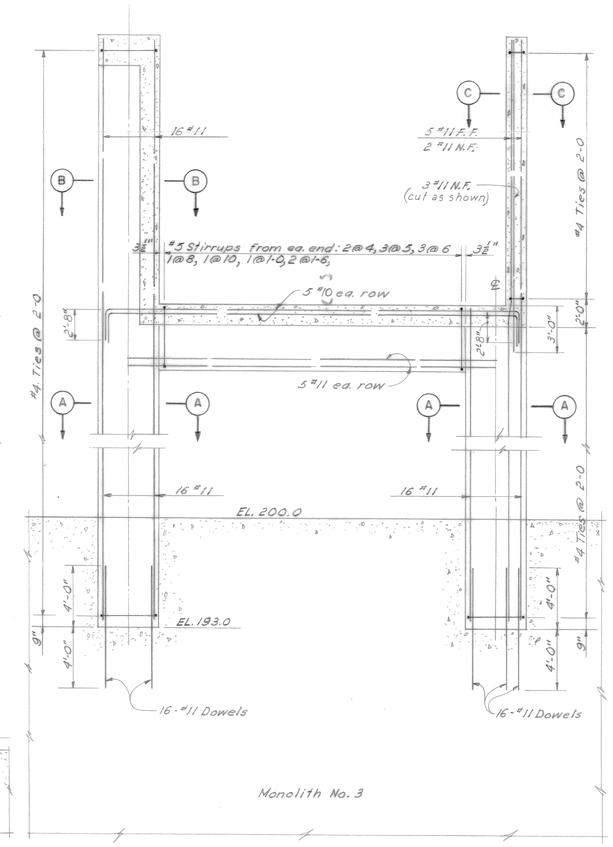

TRANSVERSE SECTION

SCALE IN FEET

4 0 4 8 12

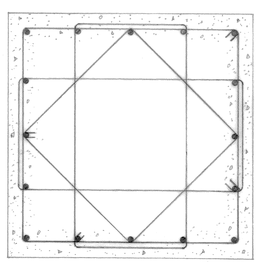

16-#11 Bars w/ #4 ties @ 2-0

SECTION A

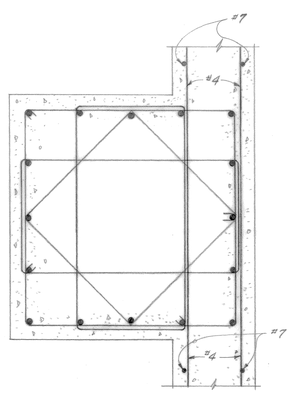

16-#11 Bars W/ #4 Ties @ 2'-0"

SECTION B

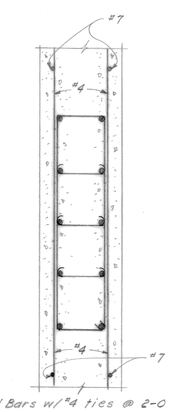

10-#11 Bars w/ #4 ties @ 2-0

SECTION C

SCALE IN FEET

1 0 1 2 3

REVISION	DATE	DESCRIPTION	BY
B	2Feb65	AS CONSTRUCTED	
A	20APR61	Revised reinf. in long. & trans. sections	

U. S. ARMY ENGINEER DISTRICT
WALLA WALLA, WASHINGTON

DESIGNED: Perkins
DRAWN: R. J. J.
CHECKED: Eyestone
PREPARED: CHIEF, STRUCT. DES. SEC.

JOHN DAY LOCK AND DAM
COLUMBIA RIVER, OREGON AND WASHINGTON
NORTH SHORE FISH LADDER-1 ON 10
SECTION NO. 13
REINFORCEMENT II

SUBMITTED: Otto R. Lewis
CHIEF, DESIGN BRANCH

APPROVED: Paul H. Symbol
COLONEL, C. E. DISTRICT ENGINEER
DATE 1 Sep 59

RECOMMENDED: E. C. Tranyer
CHIEF, ENGINEERING DIVISION

SCALE AS SHOWN
INV. NO. ENG. C-60-2
FILE NO.
SHEET 225
JDF-1-4-2/48

CORPS OF ENGINEERS

U. S. ARMY

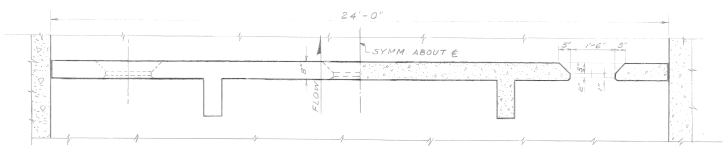

HALF PLAN

HALF SEC. A

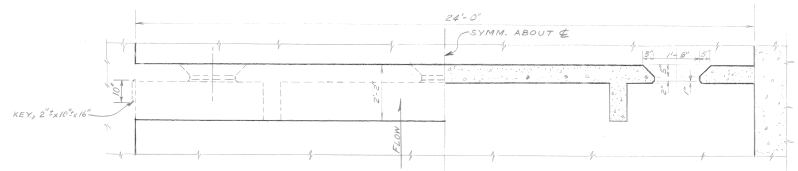

HALF PLAN

HALF SEC. C

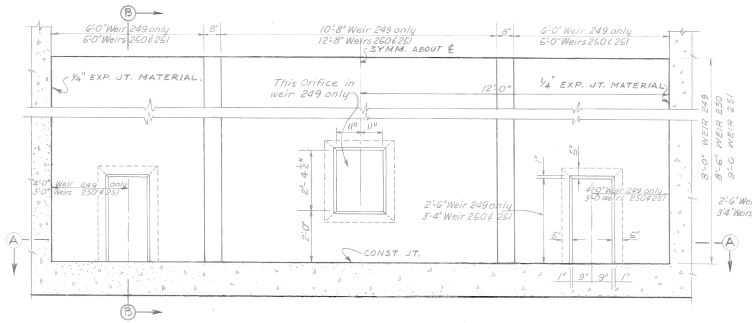

ELEVATION

WEIRS 249, 250 & 251

For elevations of center orifices in weirs 250 and 251, see Detail this sheet.

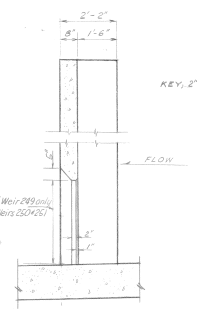

SECTION B

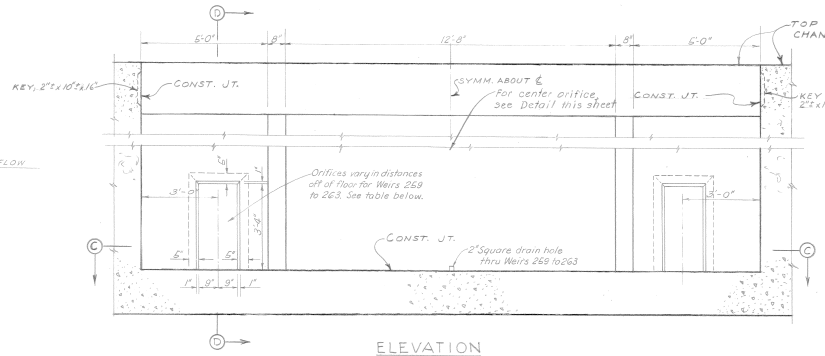

ELEVATION

WEIRS 252 TO 263

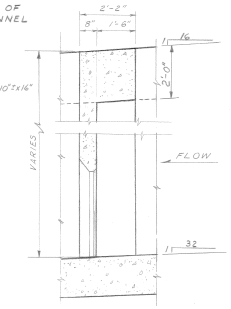

SECTION D

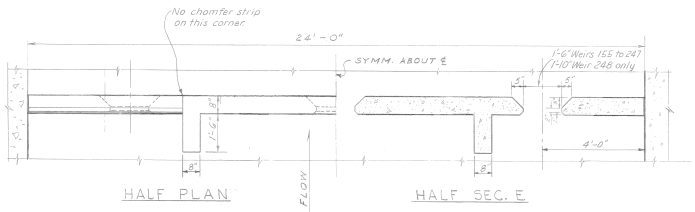

HALF PLAN

HALF SEC. E

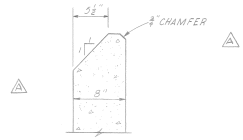

DETAIL A

SCALE: 1 1/2" = 1'-0"

WEIR NO.	SIDE ORIFICES ELEVATION OF ORIFICE INVERT	SIDE ORIFICES DISTANCE ABOVE FLOOR TO ORIFICE INVERT	CENTER ORIFICES ELEVATION OF ORIFICE INVERT	CENTER ORIFICES DISTANCE ABOVE FLOOR TO ORIFICE INVERT
252	At floor	—	249.5	5'-0"
253	"	—	250.5	5'-6"
254	"	—	251.5	6'-0"
255	"	—	252.5	6'-6"
256	"	—	253.5	7'-0"
257	"	—	254.5	7'-6"
258	"	—	255.5	8'-0"
259	248.67	8"	256.5	8'-6"
260	249.67	1'-2"	257.5	9'-0"
261	250.67	1'-8"	258.5	9'-6"
262	251.67	2'-2"	259.5	10'-0"
263	252.67	2'-8"	260.5	10'-6"

NOTE:

Bottom of all orifices not on the floor are to be beveled same as sides and tops.

NOTE

1. CONCRETE FOR WEIRS SHALL NOT BE PLACED UNTIL ALL FALSEWORK FOR SUPPORTING STRUCTURE HAS BEEN REMOVED.
2. FOR WATERSTOP DETAILS, SEE DWG. JDF 1-4-2/56

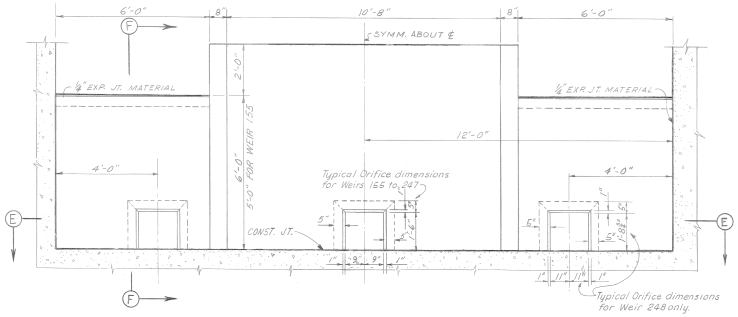

ELEVATION

WEIRS 155 TO 248

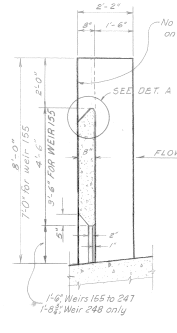

SECTION F

WEIRS 155, 158, 159, 160, 163, 164, 165, 168, 169, 170 & 172 TO 248

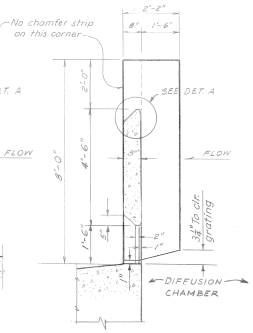

SECTION F

WEIRS 156, 157, 161, 162, 166, 167 & 171

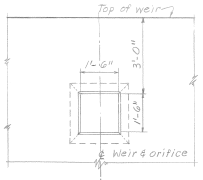

ELEVATION OF CENTER ORIFICE

WEIRS 250 THRU 263

SCALE: 1/2" = 1'-0"

SCALE: 1 1/2" = 1'-0"

WEIR DETAILS

SCALE: 1/2" = 1'-0"

REVISION	DATE	DESCRIPTION	BY
4	2 Feb 65	AS CONSTRUCTED	
3	26 Oct 61	Added center orifice to weirs 249 thru 263	
2	20 APR 61	Revised Weir Orifices and Fins.	
1	27 DEC 60	Revised weirs 155 to 248	
0	6 Oct 59	Revised DETAIL A & added bid item number to embedded angle	

DESIGNED BY U. S. ARMY ENGINEER DISTRICT, SEATTLE
CORPS OF ENGINEERS, SEATTLE, WASHINGTON

PREPARED: CHIEF, CIVIL WKS. DES. SECTION; ASST. CHIEF DES. BR. CIVIL WKS; SUBMITTED: CHIEF, DESIGN BRANCH

RECOMMENDED: CHIEF, ENGINEERING DIVISION

APPROVED: DATE 1 AUG 1959; COLONEL, C.E. DISTRICT ENGINEER

U. S. ARMY ENGINEER DISTRICT
WALLA WALLA, WASHINGTON

DESIGNED: V.E.C.
DRAWN: V.E.C. & D.C.B.
CHECKED: J.C.G. & T.L.S.
SUPERVISED: CHIEF, STRUCT. DES. SEC.

JOHN DAY LOCK AND DAM
COLUMBIA RIVER, OREGON AND WASHINGTON
NORTH SHORE FISH LADDER - 1 ON 10
WEIRS 155 TO 263
CONCRETE OUTLINE

SUBMITTED: CHIEF, DESIGN BRANCH; RECOMMENDED: CHIEF, ENGINEERING DIVISION

APPROVED: COLONEL, C.E. DISTRICT ENGINEER; DATE 1 Sep 59

SCALE AS SHOWN; INV. NO. ENG. C-GO-2

SHEET 229; FILE NO. JDF-1-4-2/52

Filmed VOLUME 1 CONTRACT

5/32. 4.60-(150) (1)

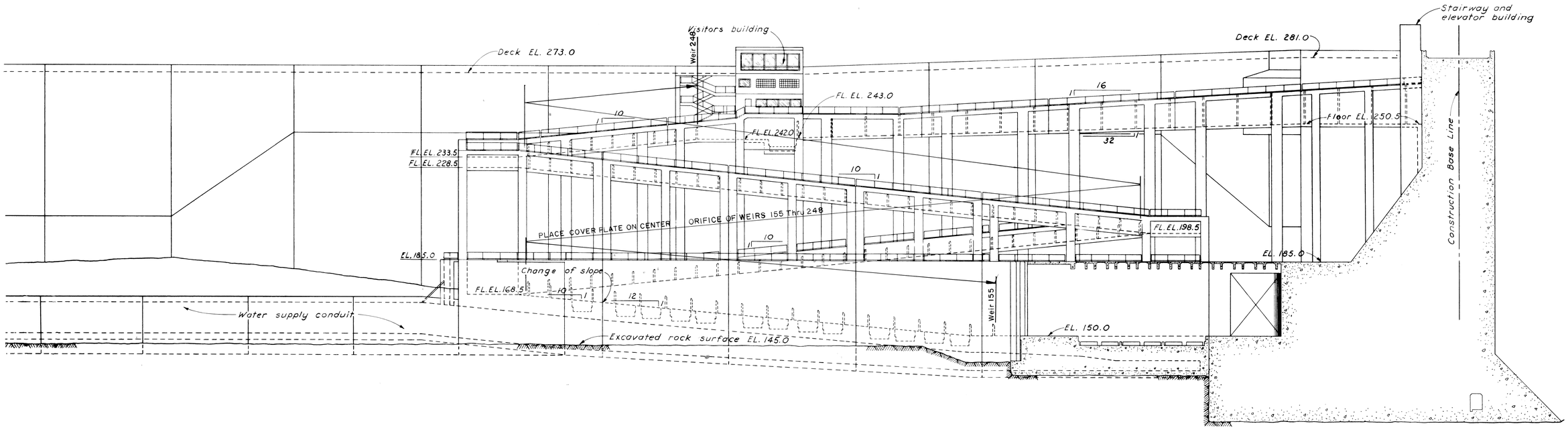

ELEVATION

SCALE IN FEET
20 0 20 40 60

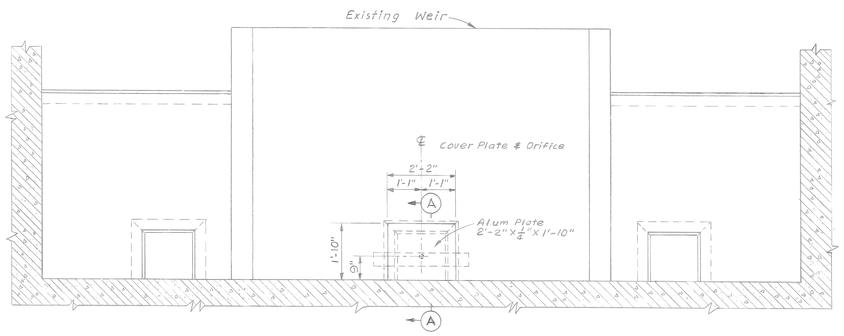

ELEVATION — WEIRS 155 THRU 248

SCALE IN FEET
2 0 2 4 6

Note:
Install cover plates as detailed at center orifice only of weirs 155 thru 248. 94 cover plates required.

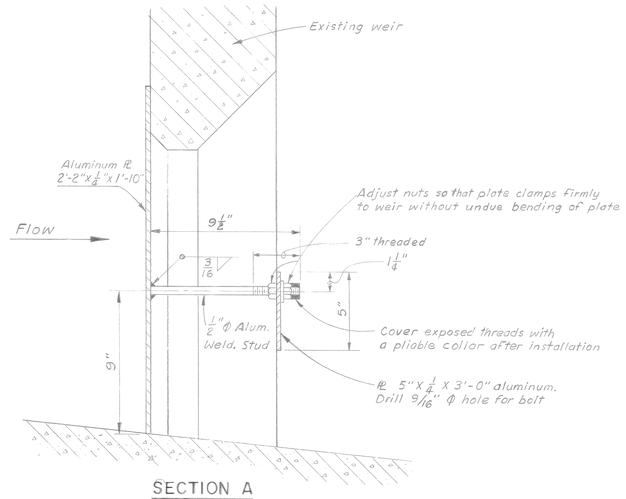

SECTION A

SCALE IN FEET
0 3" 6" 9" 12"

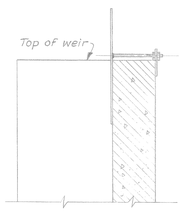

SECTION Thru WEIR
COVER PLATE IN STORED POSITION

For information of contracting officer only

SCALE IN FEET
1' 9" 6" 0 1'

Notes:

1. Aluminum plates and rod shall be QQ3276 alloy; fasteners shall be 2024 T4 alloy; and weld shall be made with 4043 alloy
2. Aluminum shall not be flame or arc cut.
3. Approximate weight = 20 1/2 lbs. each
4. Orifice cover plates as detailed on this drawing will be paid for at Contract Unit Price Item 273

REVISION	DATE	DESCRIPTION	BY
A	69 Jul 43	AS CONSTRUCTED	CDA

U. S. ARMY ENGINEER DISTRICT
WALLA WALLA, WASHINGTON

DESIGNED: MORRISSON
DRAWN: S.A.D.
CHECKED: EVESTONE
PREPARED: CHIEF, STRUCT. DES. SEC

JOHN DAY LOCK AND DAM
COLUMBIA RIVER, OREGON AND WASHINGTON
NORTH SHORE FISH LADDER
CENTER ORIFICE COVER PLATE
FOR WEIRS 155 Thru 248

SUBMITTED: CHIEF, DESIGN BRANCH
RECOMMENDED: CHIEF, ENGINEERING DIVISION
APPROVED: COLONEL, C.E. DISTRICT ENGINEER
DATE: 3 May 1963
SCALE AS SHOWN
INV. NO. ENG. 63-57
SHEET 180
FILE NO. JDF-1-4-2/58

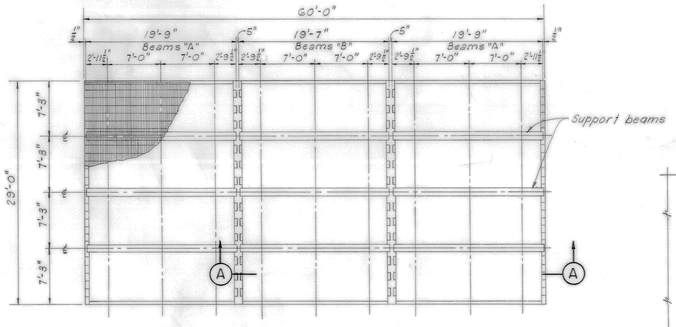

PLAN-DIFFUSER NO. 1

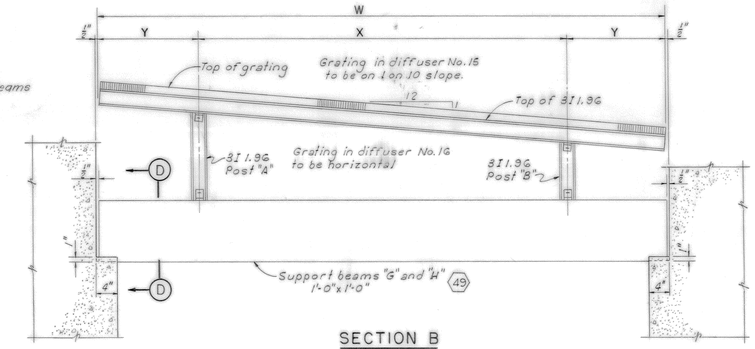

SECTION B

SCALE IN FEET

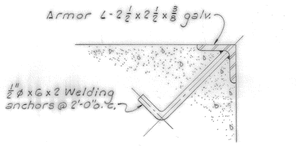

ARMOR ANGLE DETAIL 121

SCALE IN INCHES

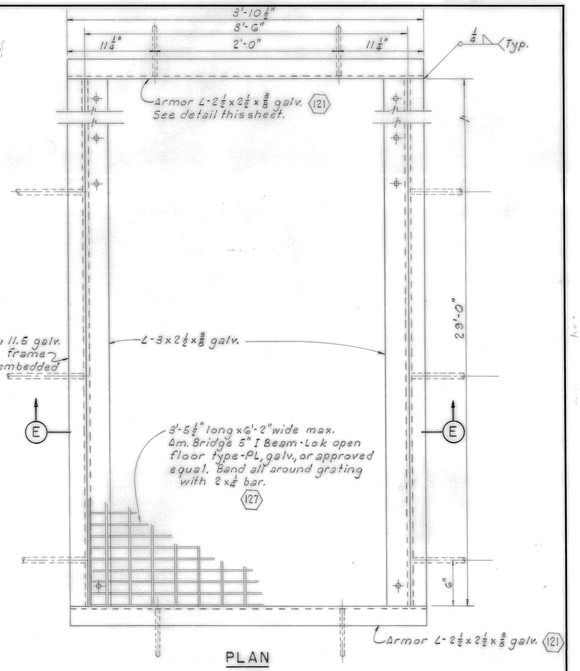

PLAN

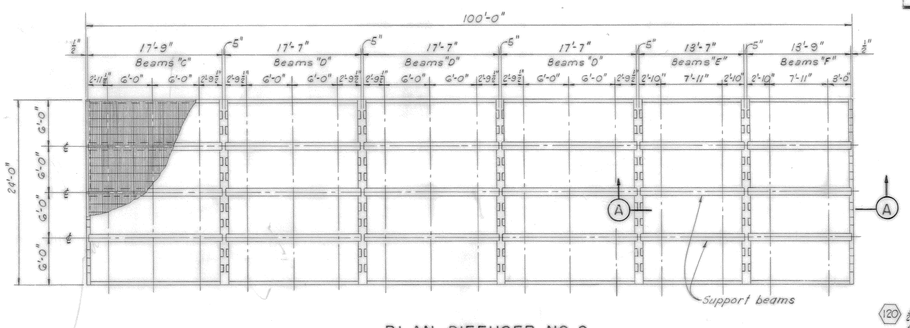

PLAN-DIFFUSER NO. 2

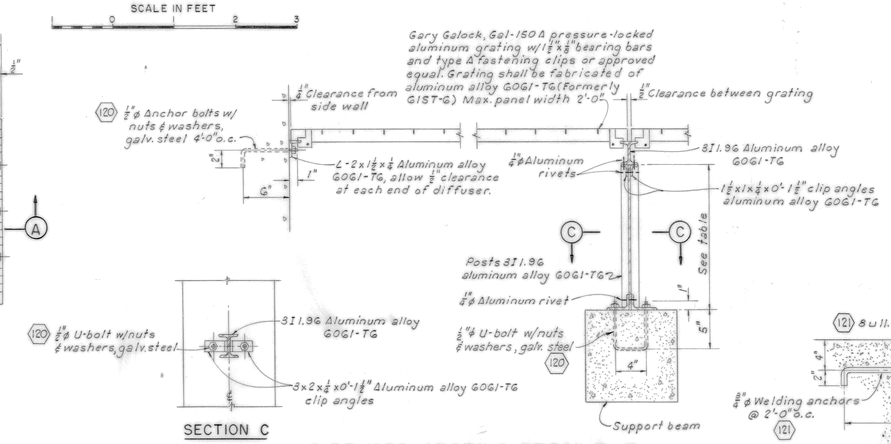

DIFFUSER GRATING DETAILS 126

SCALE IN FEET

SECTION C

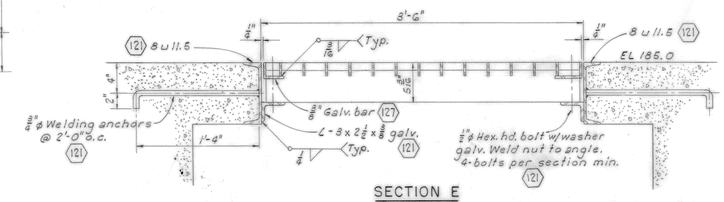

SECTION E

TYPICAL DECK GRATING OVER DIFFUSER NO. 1

SCALE IN FEET

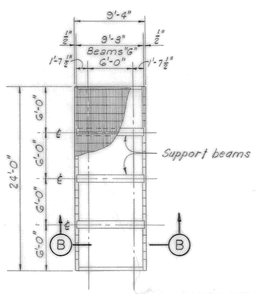

PLAN-DIFFUSERS NO. 3 THRU 15

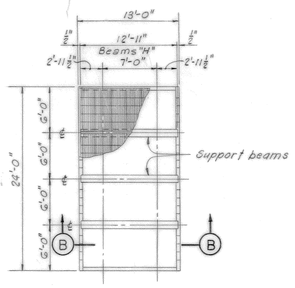

PLAN-DIFFUSER NO. 16

SCALE IN FEET

DIFFUSER BEAM TABLE

SUPPORT BEAMS	BEAM LENGTH	W	X	Y	POST "A" LENGTH	POST "B" LENGTH	NO. REQ'D.
A	19'-9"	19'-11"	7'-0"	2'-11½"	1'-1⅛"		6
B	19'-7"	19'-11"	7'-0"	2'-11½"	1'-1⅛"		3
C	17'-9"	17'-11"	6'-0"	2'-11½"	1'-1⅛"		3
D	17'-7"	17'-11"	6'-0"	2'-11½"	1'-1⅛"		9
E	18'-7"	18'-11"	7'-11"	3'-0"	1'-1⅛"		3
F	18'-9"	18'-11"	7'-11"	3'-0"	1'-1⅛"		3
G (Diff. 3, 4, 7, 8, 11 & 12)	9'-3"	9'-3"	6'-0"	1'-7½"	1'-6"	11"	18
G (Diff. 5, 6, 9, 10, 13 & 14)	9'-3"	9'-3"	6'-0"	1'-7½"	1'-7"	1'-1"	18
G (Diff. 15)	9'-3"	9'-3"	6'-0"	1'-7½"	1'-6 3/4"	11½"	3
H	12'-11"	12'-11"	7'-0"	2'-11½"	1'-1⅛"	1'-1⅛"	3
BUBBLER BEAMS							
A	19'-9"	—	—	—	—	—	24
B	19'-7"	—	—	—	—	—	12
C	17'-9"	—	—	—	—	—	8
D	17'-7"	—	—	—	—	—	24
E	13'-7"	—	—	—	—	—	8
F	13'-9"	—	—	—	—	—	8
G	9'-3"	—	—	—	—	—	104
H	12'-11"	—	—	—	—	—	8

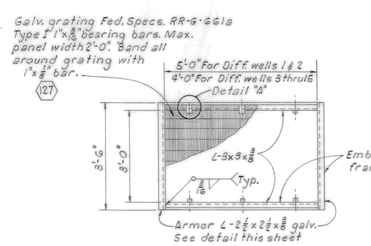

PLAN

SCALE IN FEET

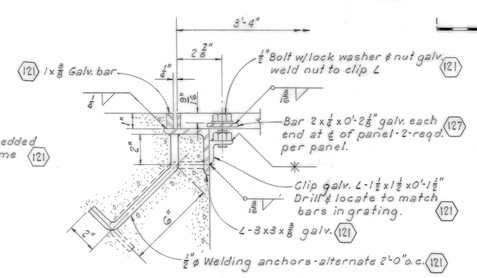

DETAIL "A"

TYPICAL DECK GRATING FOR DIFFUSER WELLS 1 THRU 15

SCALE IN INCHES

NOTES:

1. For General Notes, Concrete and Reinforcement Notes, Structural Steel Notes and Legend, see Drawing JDF-1-0-2/1
2. All steel on this drawing, except welding anchors and concrete reinforcement shall be galvanized in accordance with the specifications.
3. All aluminum surfaces coming in contact with concrete shall be painted with a heavy coat of alkali-resistant bituminous paint equal to that called for in MIL-P-6883.
4. Aluminum shall not be flame or arc cut.
5. Support beams are shown on Plan for diffusers. Place bubbler beams in each diffuser as shown on sheets 179, 180 & 232.

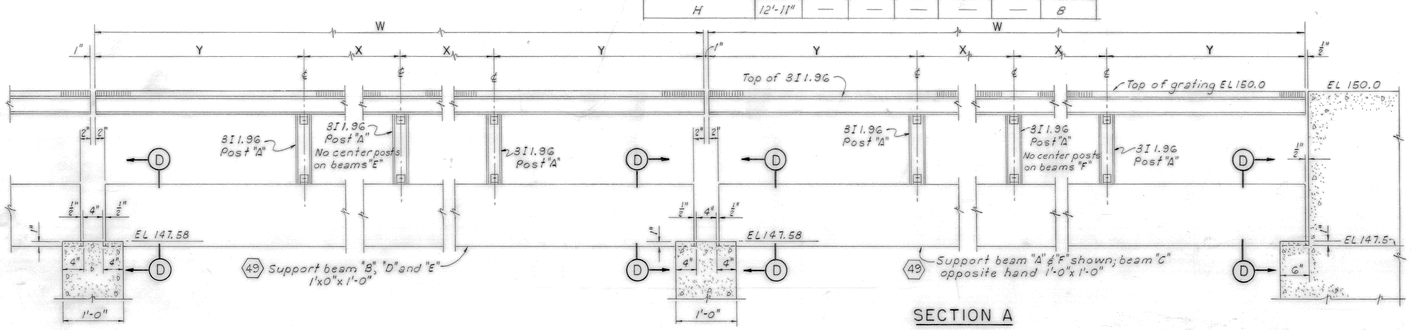

SECTION A

SCALE IN FEET

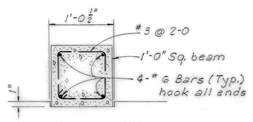

SECTION D

Note:
Bubbler beams are similar to support beams except they do not have anchor bolts for grating supports

REVISION	DATE	DESCRIPTION	BY
C	2 Feb 65	As Constructed	EWR
B	12 OCT 60	Added bubbler beam note	LCA
A	7 OCT 60	Revised diffuser beam table, added note 5 & noted beams	DJJ

U. S. ARMY ENGINEER DISTRICT
WALLA WALLA, WASHINGTON

JOHN DAY LOCK AND DAM
COLUMBIA RIVER, OREGON AND WASHINGTON

NORTH SHORE FISH LADDER

DIFFUSER AND DECK GRATING DETAILS

DESIGNED: MORRISSON
DRAWN: L. E. A.
CHECKED: EVESTONE
PREPARED: CHIEF, STRUCT. DES. SECT.
SUBMITTED: Otto R. Lunn CHIEF, DESIGN BRANCH
RECOMMENDED: E. C. Tromgin CHIEF, ENGINEERING DIVISION
APPROVED: Paul H. Gemmel COL. C. E. DISTRICT ENGINEER
DATE: 1 Sep 59
SCALE AS SHOWN
INV. NO. ENG. C-60-2
FILE NO. JDF-1-5-2/9
SHEET 242

CORPS OF ENGINEERS

U. S. ARMY

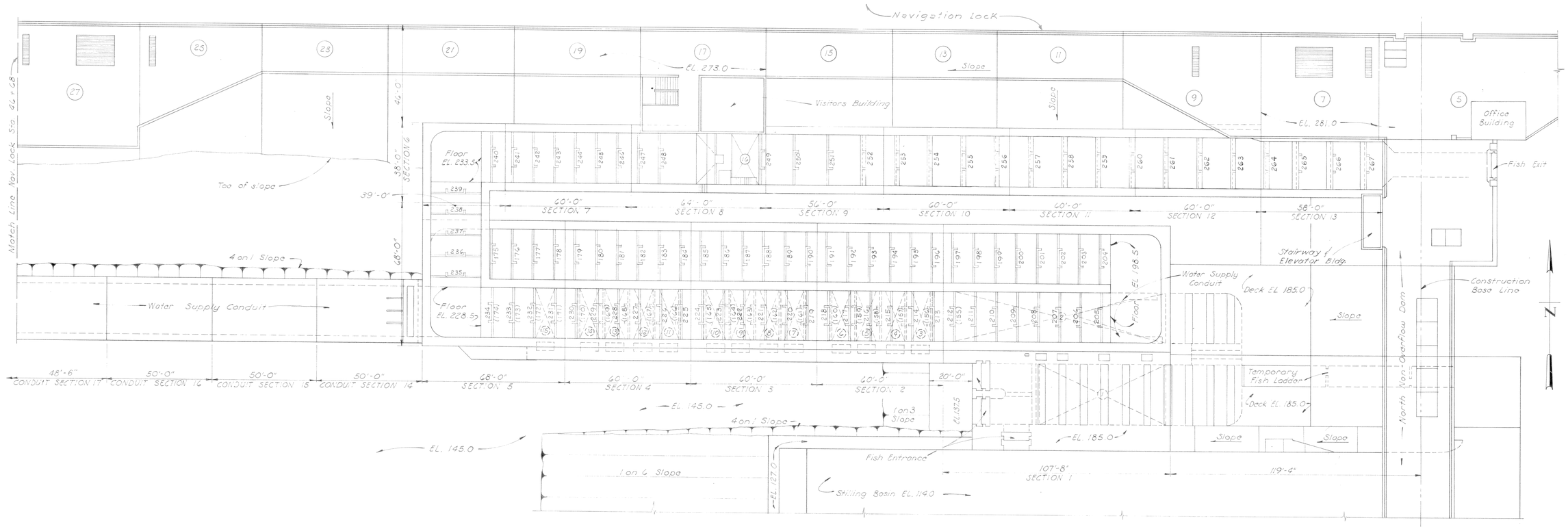

PLAN

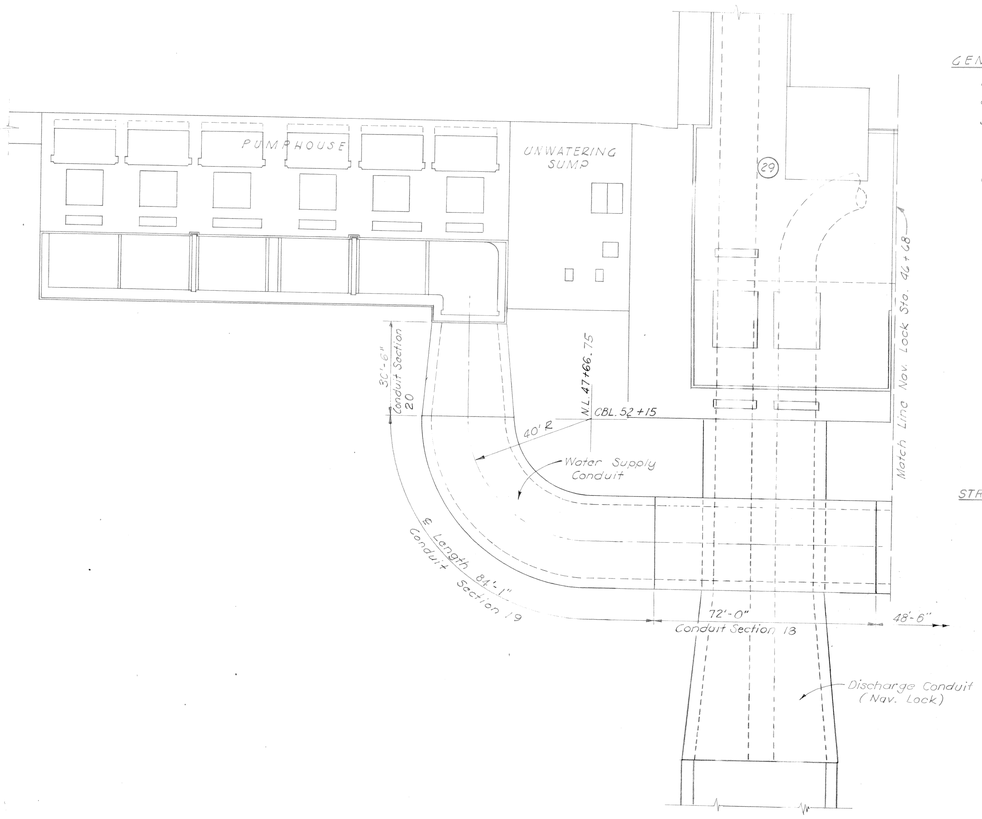

GENERAL NOTES (North Shore Fish Ladder)

1. Elevations are in feet and refer to Mean Sea Level Datum.
2. Coordinates shown are local grid unless otherwise indicated.
3. Elevations of ground and rock surfaces are based upon topography and boring data as shown on drawings of foundation explorations, and actual elevations may vary from those indicated.
4. Sections not shown on the same drawing on which they are taken are designated by fractions ($\frac{A}{12}$), the numerator (A) of which is the section reference and the denominator (12), the sheet number on which the section is shown.
5. Additional notes and exceptions will be found on individual drawings where applicable.
6. Stations indicated on the drawings by C.B.L. are Construction Base Line Stations and those indicated by N.L. are Navigation Lock Stations.
7. The weir numbers refer to the crest elevation of the weir except the tops of weirs 249 thru 267 are 2 feet higher than the weir number.
8. Sheets 3 to 9 are existing North Shore Fish Ladder drawings to be modified and shts. 10 to 30 are New Construction to be performed in accordance with the drawings and specifications.
9. Lumber other than plywood shall be No. 1 common, or better grade, of Douglas Fir S4S.

STRUCTURAL STEEL NOTES (North Shore Fish Ladder)

1. All welding shall be in accordance with standard specifications for "Welded Highway and Railway Bridges" of D2.0 - 69 of the American Welding Society.
2. All metal shall be steel unless otherwise shown and shall confirm ASTM A-36 and galvanize in accordance with contract specifications with exceptions as shown on drawings. Repair damaged galvanizing using System No. 12.
3. All welds shall be $\frac{3}{16}$" fillets or full penetration bevel welds unless otherwise noted.
4. All refererence to anchor bolts on these drawings to be $\frac{5}{8}$"ø x 6" lg. grouted in place with epoxy grout unless otherwise noted.

LEGEND

Lg -- Long or Length
@ -- Spacing center to center
⟷ -- Direction in which bars extend
←→ -- Limits of area covered by bars
T&B -- Top and Bottom
Bt -- Bent bar
St -- Straight bar
Hk -- Hooked bar
Bot -- Bottom
Stir -- Stirrup
CT -- Column tie
Stag -- Staggered
IF -- Inside face
NF -- Near face
FF -- Far face
EF -- Each face
EW -- Each way

SCALE IN FEET
20 0 20 40 60

REVISION	DATE	DESCRIPTION	BY
B	73 June 8	As constructed	
A	71 Dec 01	Revised and Added Notes	

U. S. ARMY ENGINEER DISTRICT
WALLA WALLA, WASHINGTON

DESIGNED: SARVE
DRAWN: S.A.D.
CHECKED: S.D.S.
SUPERVISED: Paul Snowbs, CHIEF, STRUCT. DES. SECT.

JOHN DAY LOCK AND DAM
(LAKE UMATILLA)
COLUMBIA RIVER, OREGON AND WASHINGTON
NORTH SHORE FISH LADDER
EXISTING GENERAL LAYOUT
PLANS

SUBMITTED: R. E. Buckler, CHIEF, DESIGN BRANCH
RECOMMENDED: [signature], CHIEF, ENGINEERING DIVISION
APPROVED: Richard M. Connell, COLONEL, C. E. DISTRICT ENGINEER
DATE 71 Nov. 11
SCALE AS SHOWN
INV. NO. 72-B-29
FILE NO.
SHEET 3
JDF-1-5-2/12

CONT. NO. 72-C-94
VOL. NO.

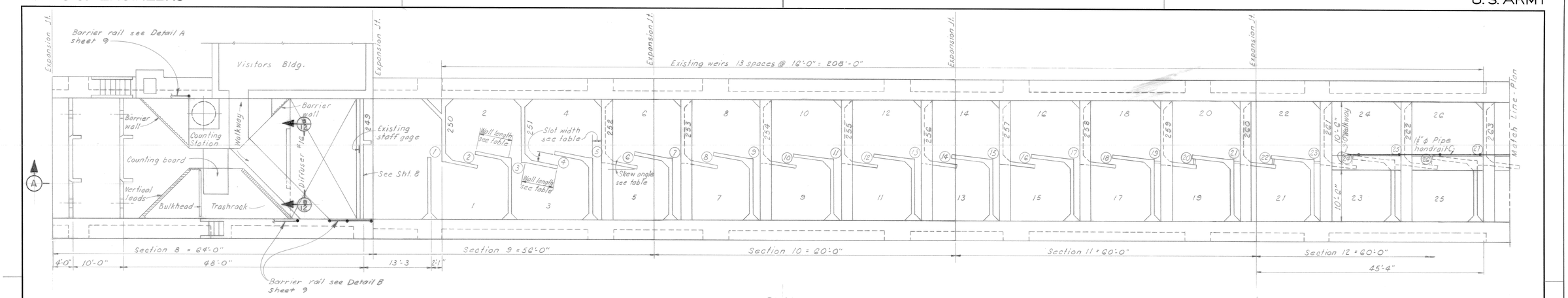

PLAN

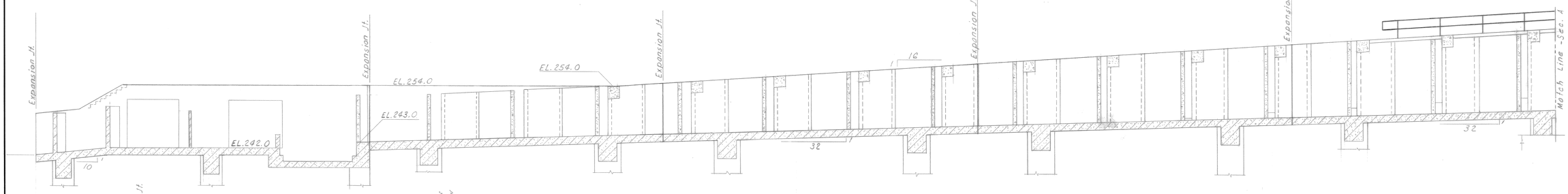

SECTION - A

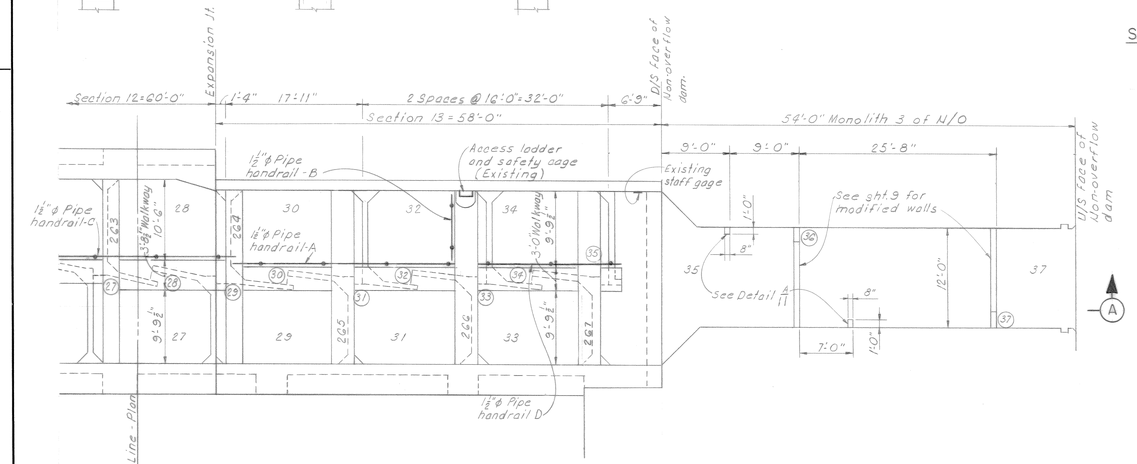

PLAN

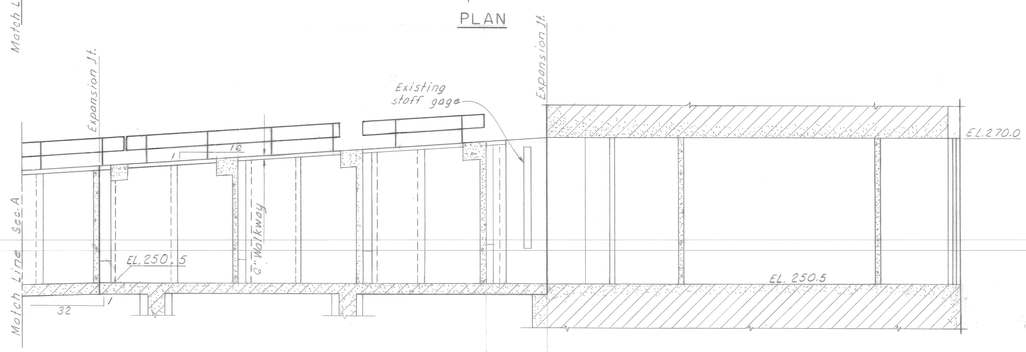

SECTION-A

SCALE IN FEET

8 0 8 16 24

WEIR AND POOL TABLE							
EXISTING WEIR NO.	MODIFIED WALL NO. See Note 4	FLOOR ELEVATION AT WALL See Note 5	ELEVATION TOP OF WALL See Note 5	ELEVATION AT TOP OF SILL	SLOT WIDTH IN FEET	WALL LENGTH IN FEET See Note 1	SKEW ANGLE
	1	243.41	251.83		2.08		
250	2	243.5	252.0		2.00	6.5	10°37'
	3	243.92	252.84		1.92	7.47	
251	4	244.0	253.0		1.83	6.5	9°45'
	5	244.43	253.85		1.79	7.57	
252	6	244.5	254.0		1.71	6.5	9°06'
	7	244.93	254.85		1.67	7.67	
253	8	245.0	255.0		1.62	6.5	8°37'
	9	245.43	255.86		1.54	7.78	
254	10	245.5	256.0		1.50	6.5	8°01'
	11	245.93	256.87		1.46	7.84	
255	12	246.0	257.0		1.42	6.5	7°37'
	13	246.44	257.87		1.38	7.91	
256	14	246.5	258.0		1.33	6.5	7°12'
	15	246.94	258.88		1.29	7.98	
257	16	247.0	259.0		1.29	6.5	6°59
	17	247.44	259.88		1.25	8.02	
258	18	247.5	260.0		1.25	6.5	6°48'
	19	247.94	260.88	248.30	1.25	8.01	
259	20	248.0	261.0	248.70	1.25	6.5	6°48'
	21	248.44	261.88	249.30	1.25	8.01	
260	22	248.5	262.0	249.70	1.25	6.5	6°48'
	23	248.94	262.88	250.20	1.25	8.01	
261	24	249.0	263.0	250.80	1.25	6.5	6°48'
	25	249.44	263.88	251.30	1.25	8.01	
262	26	249.5	264.0	251.90	1.25	6.5	6°48'
	27	249.94	264.88	252.50	1.25	8.01	
263	28	250.0	265.0	252.80	1.25	6.5	9°51'
	29	250.44	265.88	253.30	1.25	8.12	
264	30	250.5	266.0	254.25	1.25	7.75	6°13'
265	31	250.5	267.0	254.40	1.25	8.01	
	32	250.5	267.12	255.20	1.25	6.5	6°48'
266	33	250.5	268.0	255.00	1.25	8.01	
	34	250.5	268.12	256.00	1.25	6.5	6°48'
267	35	250.5	269.0	256.00	1.25	8.01	
	35 U/S	250.5	269.13		1.25		
	30 C/L 37 (at slot)	250.5	269.0		1.25		

Note: Sills for pools Nos. 19 thru 23 are fixed and 24 thru 35 are movable.

NOTES:

1. Dimension 6'-0" typical for all walls exiting from even numeral pools (2, 4, 6, ---- 34) with the exception of pool 30.
2. All orifices in existing weirs 250 thru 267 will be plugged flush with concrete surface. Weir 249 will be plugged and modified as shown. See sheets 8 and 9 for details.
3. See sheet 12 for concrete and reinforcement for wall baffle downstream of diffuser #16.
4. Wall numbers are taken as downstream of their respective slot numbers except as noted.
5. Floor and top of wall elevation of modified walls are taken as the upstream face of the wall perpendicular to the channel.
6. Clean the surface between existing concrete at floors, walls and weirs, and new concrete to be poured.
7. Contractor is to exert special care not to damage porcelain enamel finish on staff gages in diffuser #16 and in pool 33. If staff gage is damaged during contract, Contracting Officer will direct repairs at contractors expense.
8. All dowel bars and anchor bolts embedded in concrete to be grouted with 209C Edoco Epoxy Grout or approved equal.

REVISION	DATE	DESCRIPTION	BY
B	73 June 8	As constructed	
A	71 Dec. 01	Added Barrier Rails, Revise walls.	

U. S. ARMY ENGINEER DISTRICT
WALLA WALLA, WASHINGTON

DESIGNED: Sarve
DRAWN: J. L.
CHECKED: S.D.S.
SUPERVISED: CHIEF, STRUCT. DES. SEC.

JOHN DAY LOCK AND DAM
(LAKE UMATILLA)
COLUMBIA RIVER OREGON AND WASHINGTON

NORTH SHORE FISH LADDER
MODIFIED SECTIONS 10-14
PLAN, SECTION AND TABLE

SUBMITTED: R. E. Buckler — CHIEF, DESIGN BRANCH
RECOMMENDED: CHIEF, ENGINEERING DIVISION
APPROVED: COLONEL, C. E. DISTRICT ENGINEER — DATE 71 Nov 11
SCALE AS SHOWN
INV. NO. 72-B-29
SHEET 10
FILE NO. JDF-1-5-2/19

CONT. NO. 72-C-94 VOL. NO.

CORPS OF ENGINEERS

U. S. ARMY

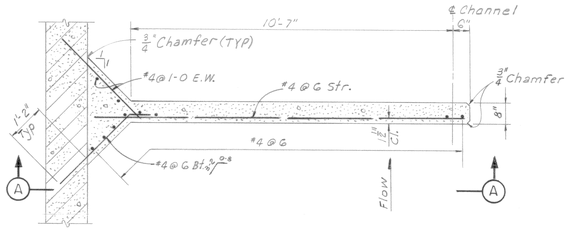

SECTIONAL PLAN B

WALL 1

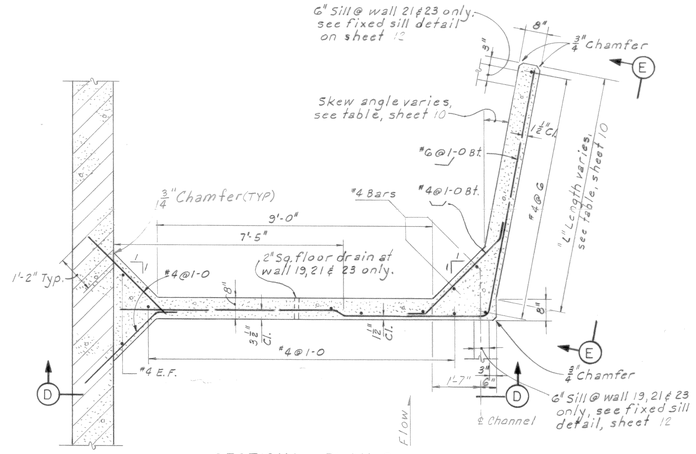

SECTIONAL PLAN C

WALL 3,5,7,9,11,13,15,17,19,21 & 23

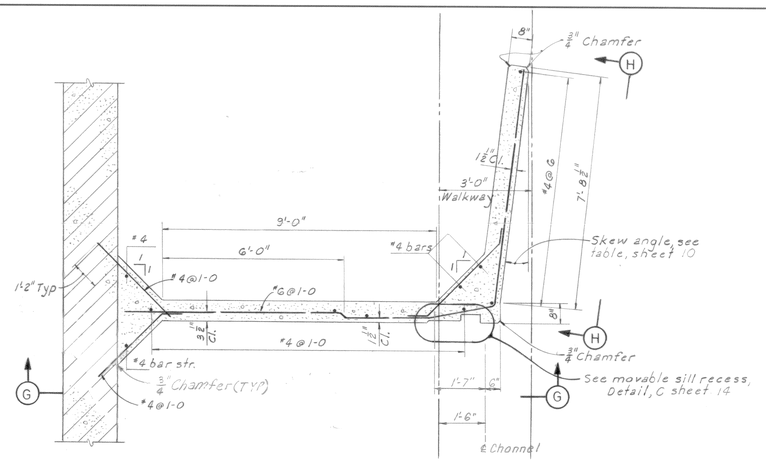

SECTIONAL PLAN F

WALL 25,27

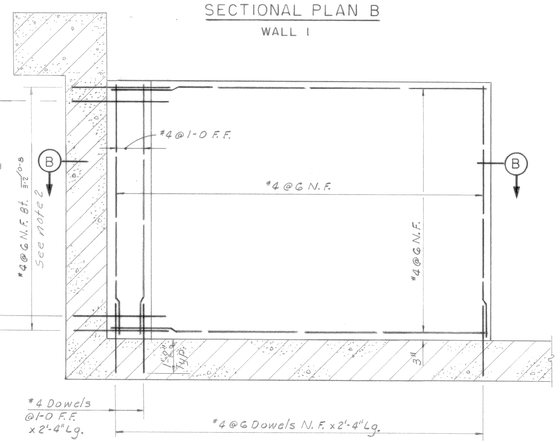

SECTION A

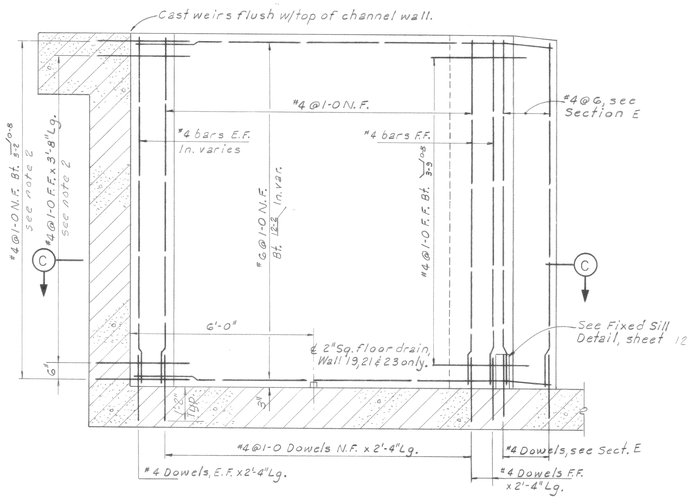

SECTION D

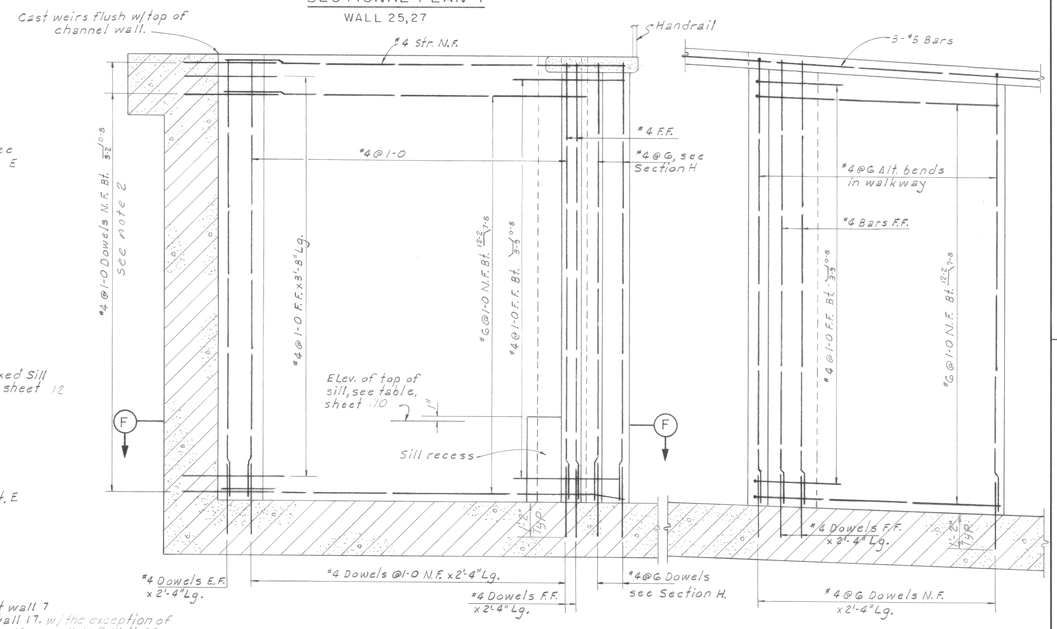

SECTION G

SECTION H

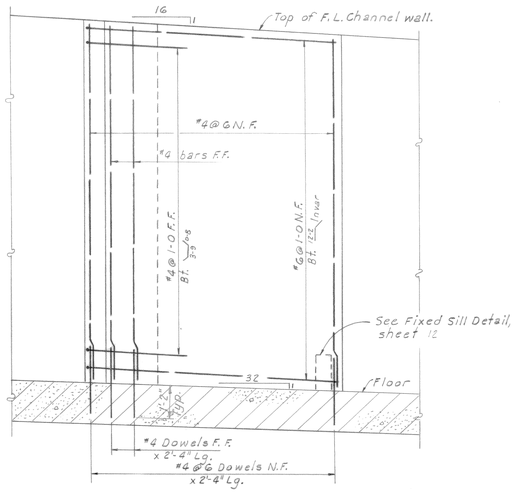

SECTION E

SEE SECTION E' FOR WALL 7 & 15

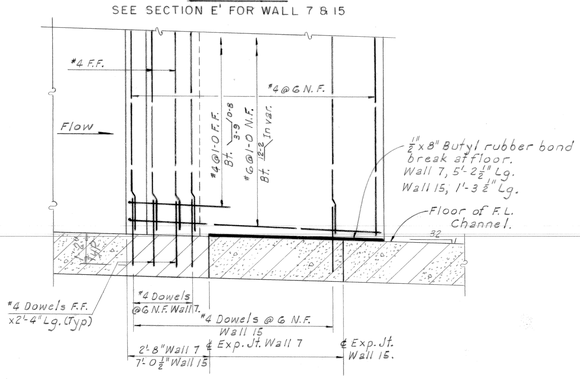

SECTION E'

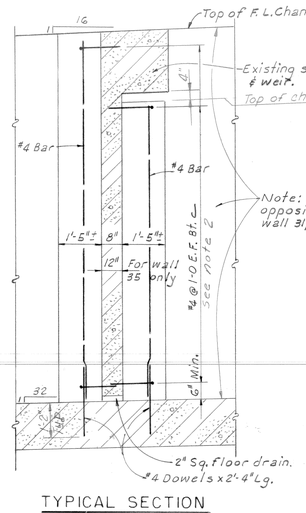

TYPICAL SECTION

WALL 8,10,12,14,16,18,20,22,24,26, 28,30,31,33 & 35

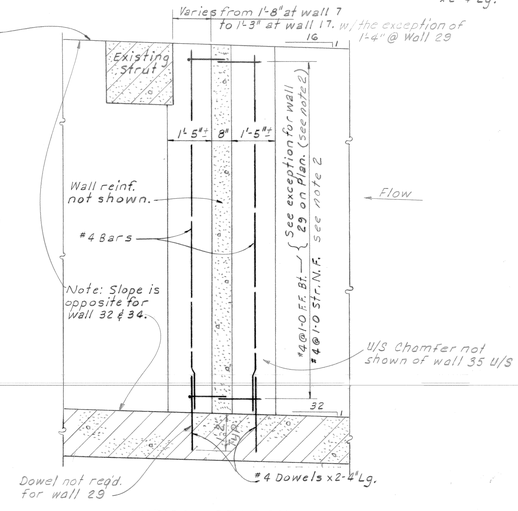

TYPICAL SECTION

WALL 7,9,11,13,15,17,19,21,23,25, 27,29,32,34 & 35 U/S

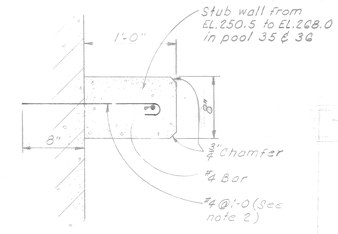

DETAIL A/10

NOT TO SCALE

SCALE IN FEET

2 0 2 4 6

NOTES:

1. Wall numbers are taken as downstream of their respective slot number except as noted.
2. Incline horiz. dowel bar holes at a 4 on 1 slope to retain epoxy grout.
3. Relocate dowel holes if there is interference from resteel in existing concrete. Typical for sheets 11 thru 14

REVISION	DATE	DESCRIPTION	BY
B	73 June 8	As constructed	
A	71 Dec. 01	Revised Note 3.	

U. S. ARMY ENGINEER DISTRICT
WALLA WALLA, WASHINGTON

JOHN DAY LOCK AND DAM
(LAKE UMATILLA)
COLUMBIA RIVER OREGON AND WASHINGTON
NORTH SHORE FISH LADDER
MODIFIED WALLS
PLANS AND SECTIONS I

DESIGNED: S.A.R.V.E.
DRAWN: S.A.D.
CHECKED: S.D.S.
SUPERVISED: CHIEF, STRUCT. DES. SEC.
SUBMITTED: CHIEF, DESIGN BRANCH
RECOMMENDED: CHIEF, ENGINEERING DIVISION
APPROVED: COLONEL, C.E. DISTRICT ENGINEER
DATE 71 Nov. 11
SCALE AS SHOWN
INV. NO. 72-B-29
SHEET 11
FILE NO. JDF-1-E-2/20

CONT. NO. 72-C-94

VOL. NO.

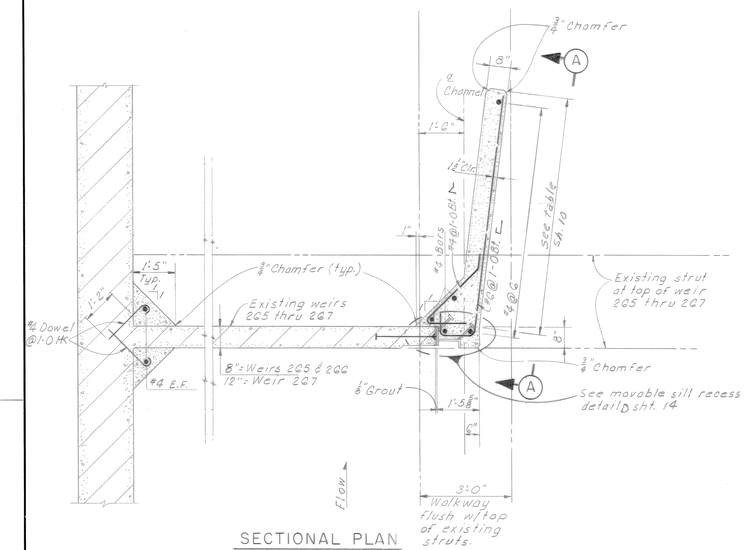

SECTIONAL PLAN
WALL 31, 33 & 35

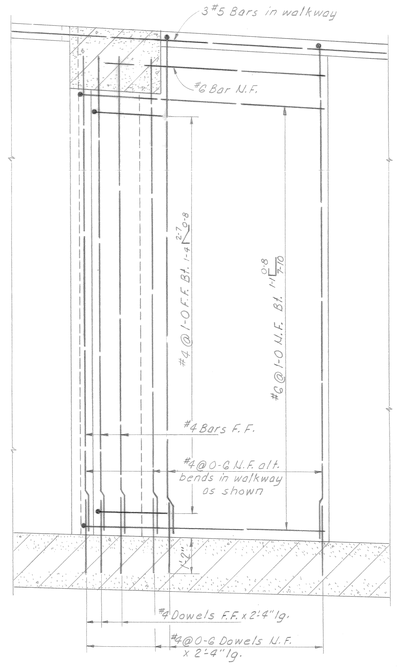

SECTION A

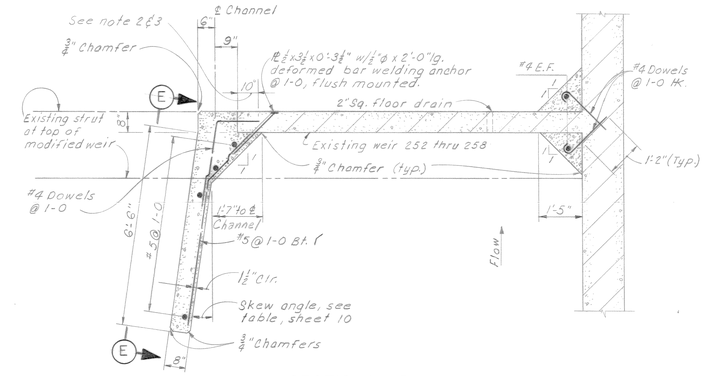

SECTIONAL PLAN
WALL 6, 8, 10, 12, 14, 16 & 18

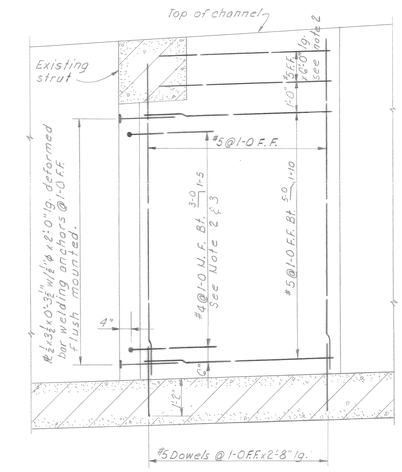

SECTION-E

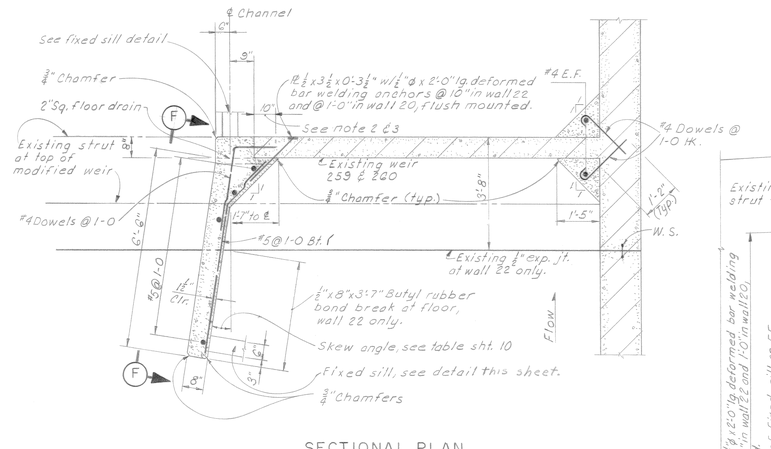

SECTIONAL PLAN
WALL 20 & 22

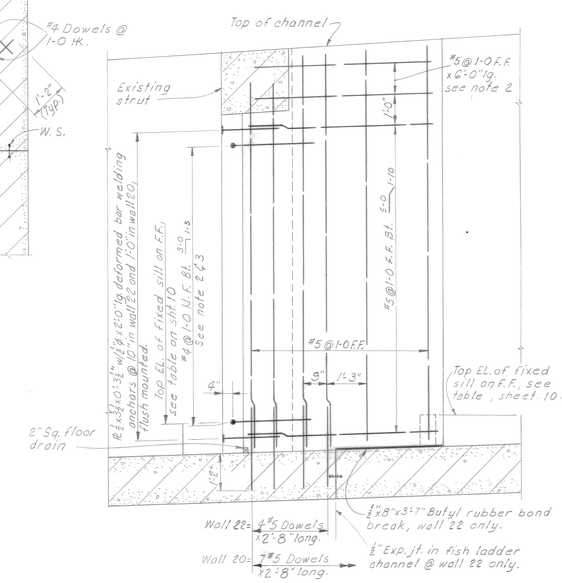

SECTION-F

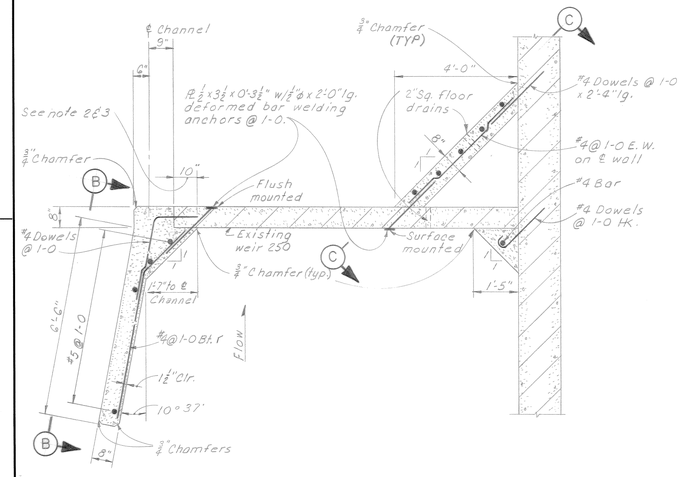

SECTIONAL PLAN
WALL 2

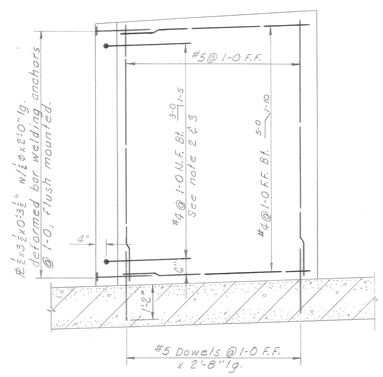

SECTION B & D

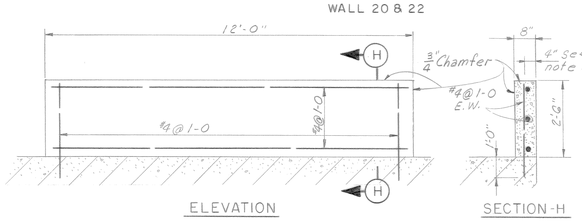

ELEVATION

SECTION-H

SECTION B/10

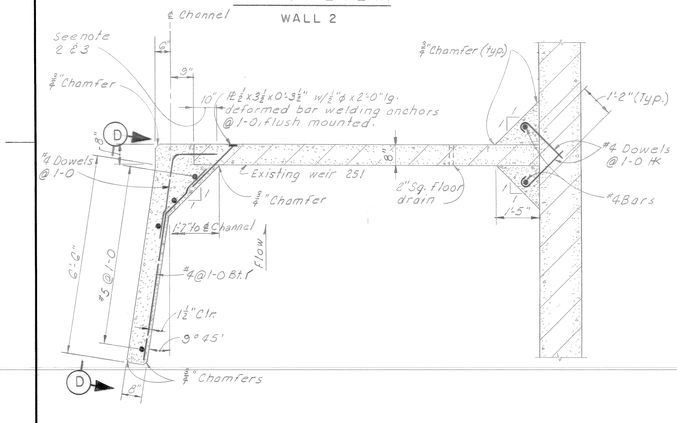

SECTIONAL PLAN
WALL 4

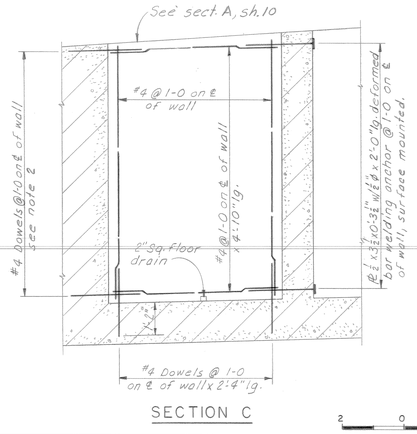

SECTION C

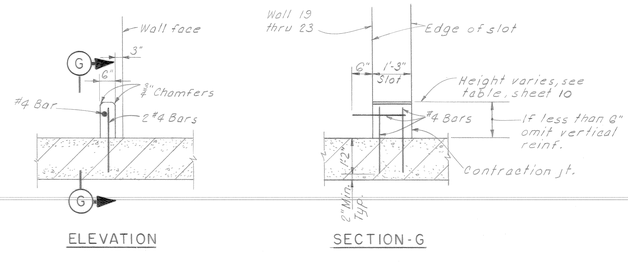

ELEVATION

SECTION-G

FIXED SILL DETAIL

NOTES:

1. Walls numbered on sectional plans are downstream of their respective slot numbers.
2. Incline horizontal dowel bar holes at a 4 on 1 slope to retain epoxy grout.
3. Use ½"ø Rotary hole drilled into existing wall and floor where indicated, also all dowel bar holes within 1'-0" of expansion joints.
4. Galvanize after welding deformed bar welding anchor to ⅛" plate.

REVISION	DATE	DESCRIPTION	BY
C	73 June 8	As constructed	
B	72 May 14	Changed note for clarification as per amendment #1	
A	71 Dec. 01	Added Note 4.	

U. S. ARMY ENGINEER DISTRICT
WALLA WALLA, WASHINGTON

JOHN DAY LOCK AND DAM
(LAKE UMATILLA)
COLUMBIA RIVER, OREGON AND WASHINGTON

NORTH SHORE FISH LADDER

MODIFIED WALLS
PLANS AND SECTIONS II

DESIGNED: Sarve
DRAWN: J. L.
CHECKED: S. D. S.
SUPERVISED: CHIEF, STRUCT. DES. SEC.
SUBMITTED: R. E. Leuckler CHIEF, DESIGN BRANCH
RECOMMENDED: CHIEF, ENGINEERING DIVISION
APPROVED: Richard M. Connell COLONEL, C. E. DISTRICT ENGINEER
DATE 71 Nov. 11
SCALE AS SHOWN
INV. NO. 72-B-29
FILE NO.
SHEET 12
JDF-1-5-2/21

SCALE IN FEET 2 0 2 4 6

CONT. NO. 72-C-94 VOL. NO.

05903 (434)

CORPS OF ENGINEERS

U. S. ARMY

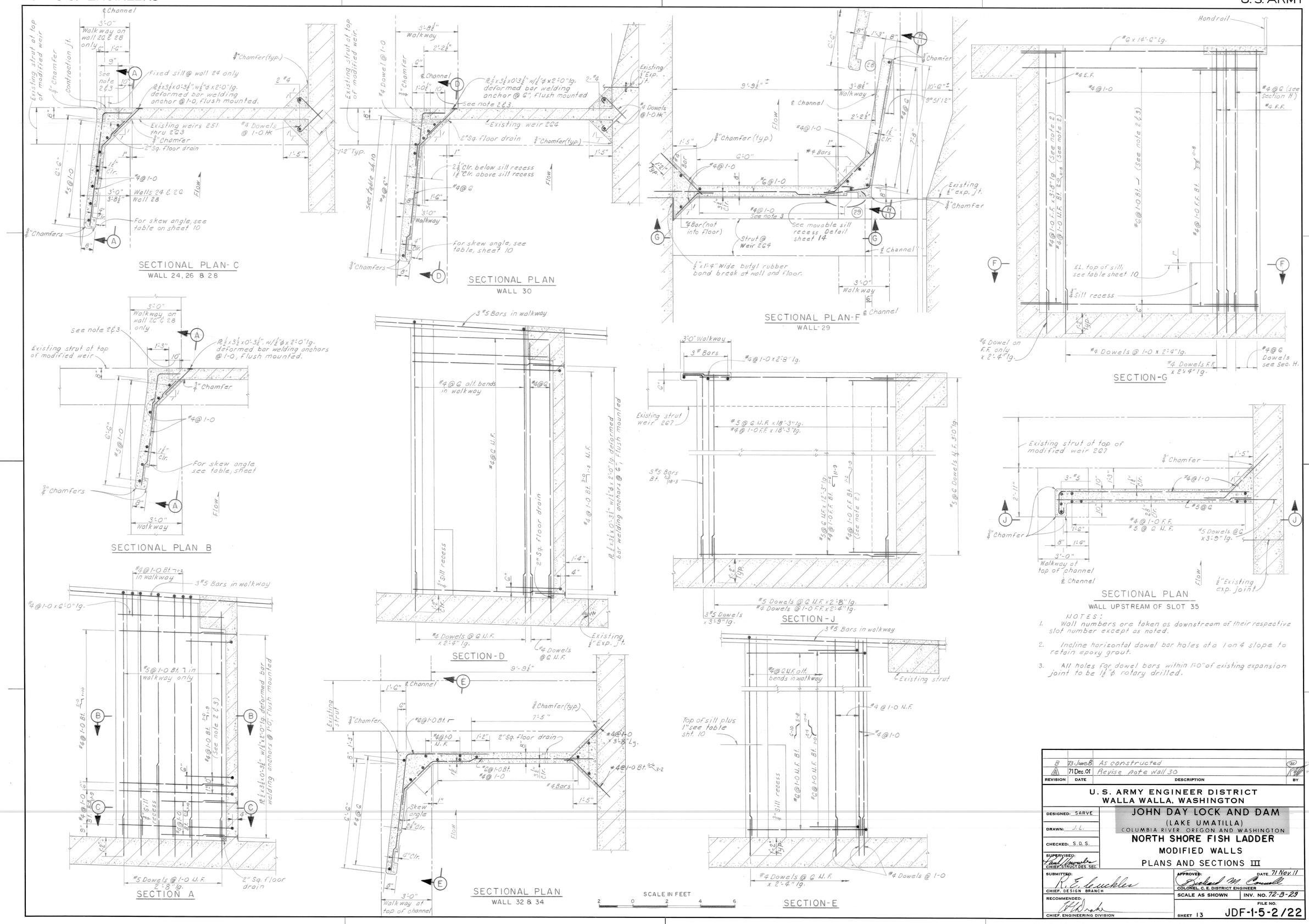

NOTES:

1. Wall numbers are taken as downstream of their respective slot number except as noted.
2. Incline horizontal dowel bar holes at a 1 on 4 slope to retain epoxy grout.
3. All holes for dowel bars within 1'-0" of existing expansion joint to be 1½" ϕ rotary drilled.

REVISION	DATE	DESCRIPTION	BY
B	73 June 8	As constructed	
A	71 Dec. 01	Revise note wall 30	

U. S. ARMY ENGINEER DISTRICT
WALLA WALLA, WASHINGTON

JOHN DAY LOCK AND DAM
(LAKE UMATILLA)
COLUMBIA RIVER OREGON AND WASHINGTON

NORTH SHORE FISH LADDER
MODIFIED WALLS
PLANS AND SECTIONS III

DESIGNED: SARVE
DRAWN: J.L.
CHECKED: S.D.S.
SUPERVISED: CHIEF, STRUCT. DES. SEC.
SUBMITTED: R. E. Buckler, CHIEF, DESIGN BRANCH
RECOMMENDED: CHIEF, ENGINEERING DIVISION
APPROVED: Richard M. Connell, COLONEL, C. E. DISTRICT ENGINEER — DATE 71 Nov. 11
SCALE AS SHOWN — INV. NO. 72-B-29
SHEET 13 — FILE NO. JDF-1-5-2/22

CONT. NO. 72-C-94 VOL. NO.

054043
343

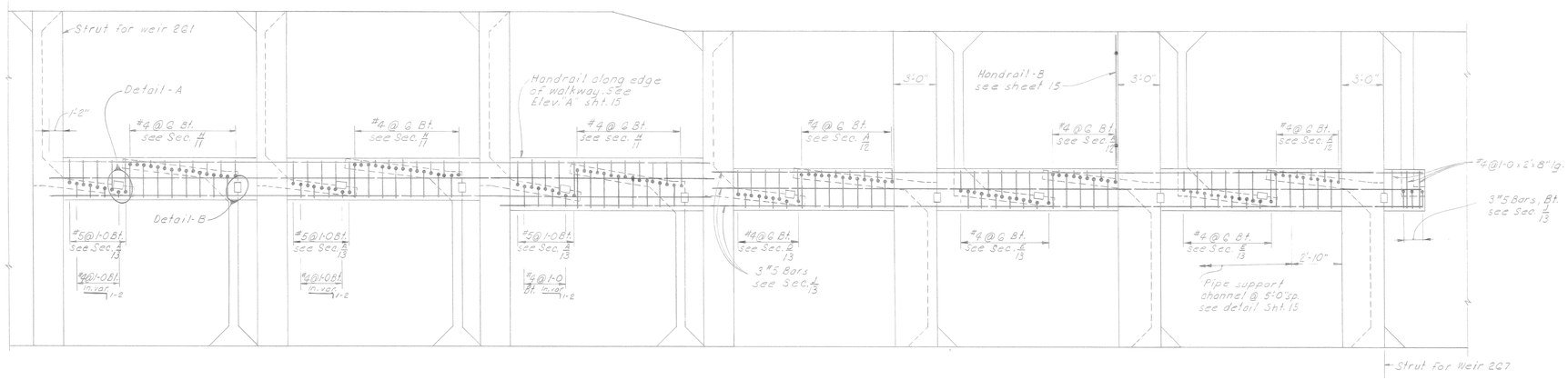

PLAN OF WALKWAY

SCALE IN FEET 4 0 4 8 12

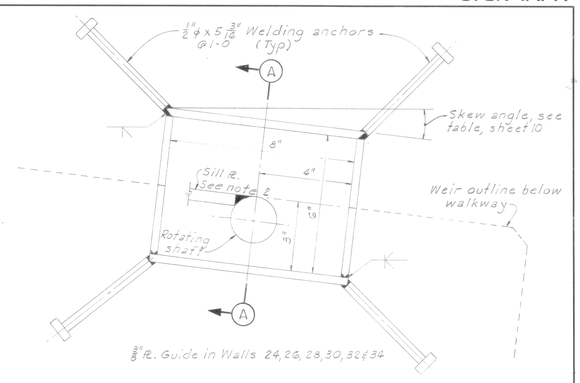

DETAIL "A"

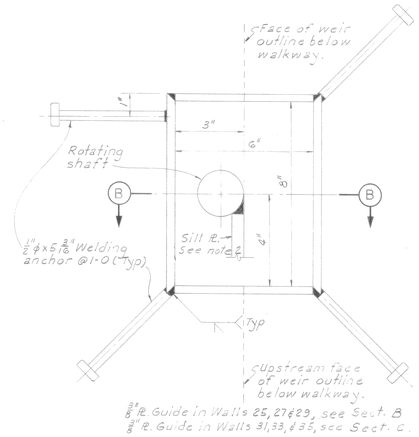

DETAIL "B"

SCALE IN INCHES 2" 0 2" 4" 6"

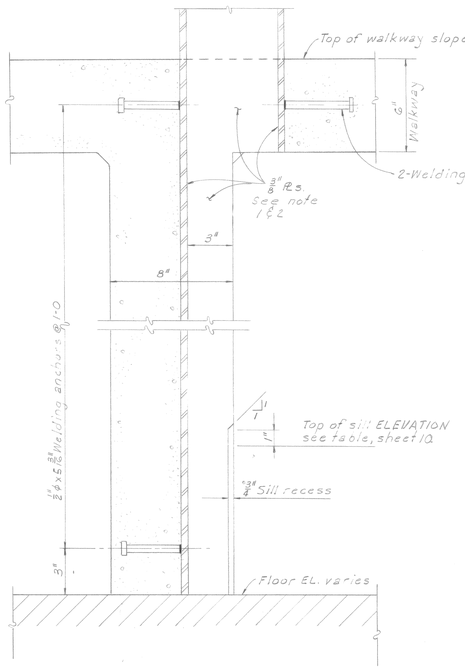

SECTION A

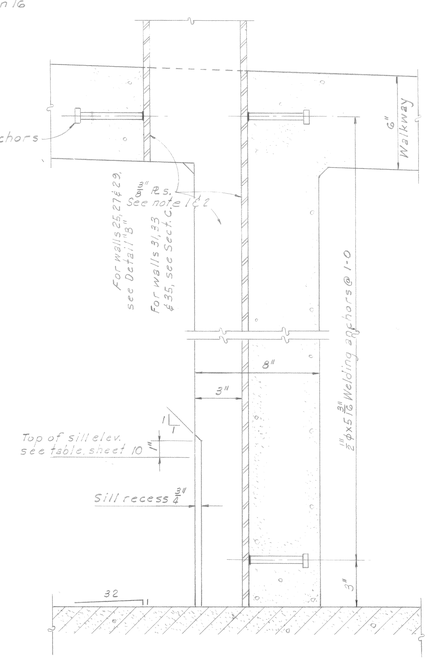

SECTION B

SCALE IN INCHES 3" 0 3" 6" 9" 12"

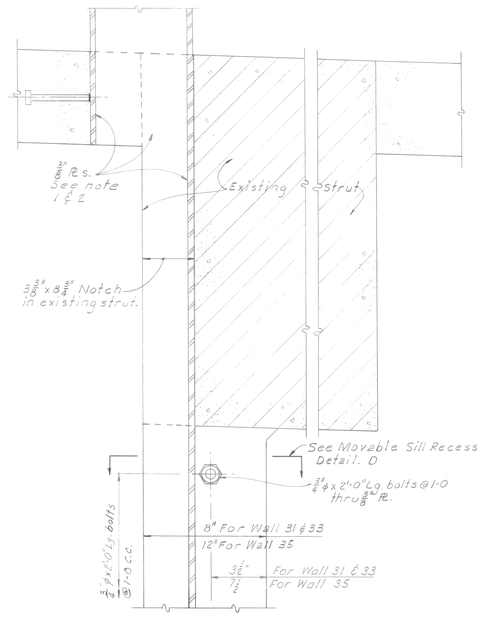

SECTION C

NOTES:

1. See sheet 24 for bearing assembly to guide detail.
2. Use paint system #3 on steel surface not to be embedded in concrete.
3. Paint epoxy grout on concrete surfaces chipped 1/2" deep for sill recesses on walls 31, 33 & 35
4. 1 1/2"ϕ Rotary hole drilled into existing weir wall on a 1 on 4 slope to retain epoxy grout.
5. Pour epoxy grout behind guide plate in 3"ϕ hole at a slow enough rate not to build up more than a 3 ft. pressure head behind plate.

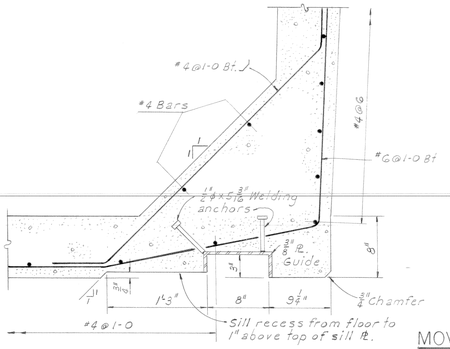

DETAIL "C" 11, 13

MOVABLE SILL RECESS

SCALE IN FEET 0

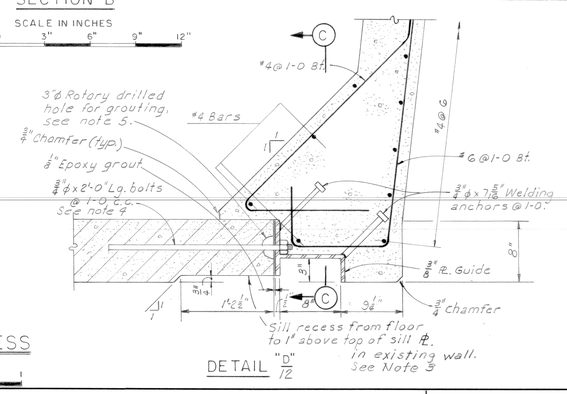

DETAIL "D" 12

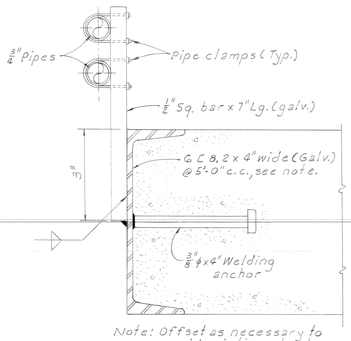

Note: Offset as necessary to avoid existing struts.

18 Req.

PIPE SUPPORT CHANNEL

HALF SCALE

REVISION	DATE	DESCRIPTION	BY
C	73 June 8	As constructed	
B	72 March	Changed note for clarification as per amendment #1	
A	71 Dec. 01	Revise note 4 & Details C, D	

U. S. ARMY ENGINEER DISTRICT
WALLA WALLA, WASHINGTON

JOHN DAY LOCK AND DAM
(LAKE UMATILLA)
COLUMBIA RIVER OREGON AND WASHINGTON
NORTH SHORE FISH LADDER
MODIFIED WALLS
WALKWAY PLAN & DETAILS

DESIGNED: SARVE
DRAWN: S. A. D.
CHECKED: S. D. S
SUPERVISED: CHIEF STRUCT. DES. SEC.
SUBMITTED: CHIEF, DESIGN BRANCH
RECOMMENDED: CHIEF, ENGINEERING DIVISION
APPROVED: COLONEL, C. E. DISTRICT ENGINEER
DATE 71 Nov 11
SCALE AS SHOWN
INV. NO. 72-B-29
FILE NO.
SHEET 14
JDF-1-5-2/23

CONT. NO. 72_C_94 VOL. NO.

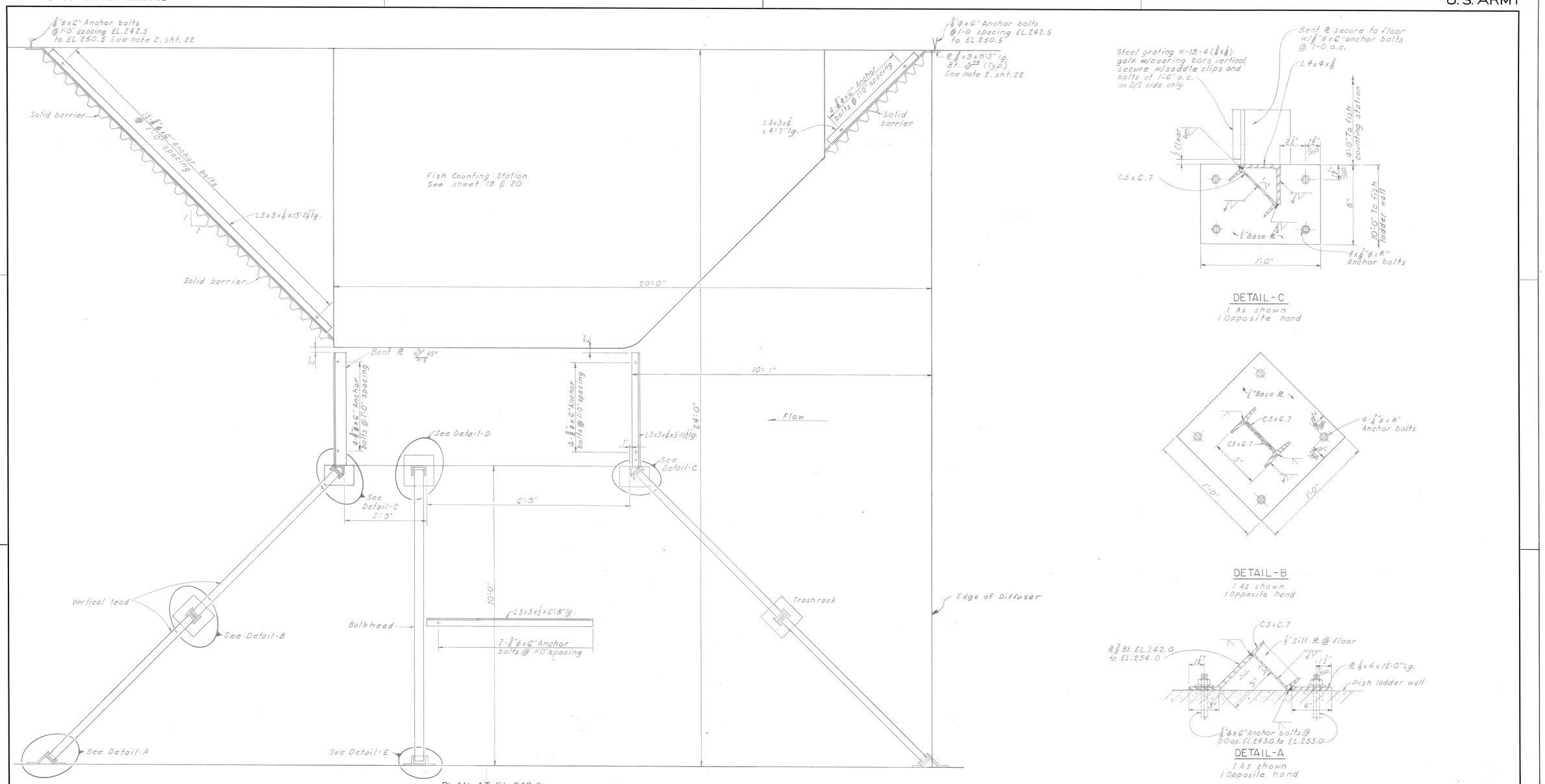

REVISION	DATE	DESCRIPTION	BY
C	73 June 18	As constructed	
B	72 March	Revised for clarification as per amendment 7	
A	71 Dec. 01	Added Note to Plan	

U.S. ARMY ENGINEER DISTRICT
WALLA WALLA, WASHINGTON

DESIGNED: SARVE
DRAWN: J.L.
CHECKED: SD.S
SUPERVISED: CHIEF, STRUCT. DES. SEC.

JOHN DAY LOCK AND DAM
(LAKE UMATILLA)
COLUMBIA RIVER OREGON AND WASHINGTON
NORTH SHORE FISH LADDER
COUNTING STATION GENERAL PLAN
AT EL.242.5

SUBMITTED: CHIEF, DESIGN BRANCH
APPROVED: COLONEL, C.E. DISTRICT ENGINEER
DATE 71 Nov. 11
RECOMMENDED: CHIEF, ENGINEERING DIVISION
SCALE AS SHOWN
INV. NO. 72-B-29
FILE NO.
SHEET 16
JDF-1-5-2/25

CONT. NO. 72-C-94 VOL. NO.

CORPS OF ENGINEERS

U. S. ARMY

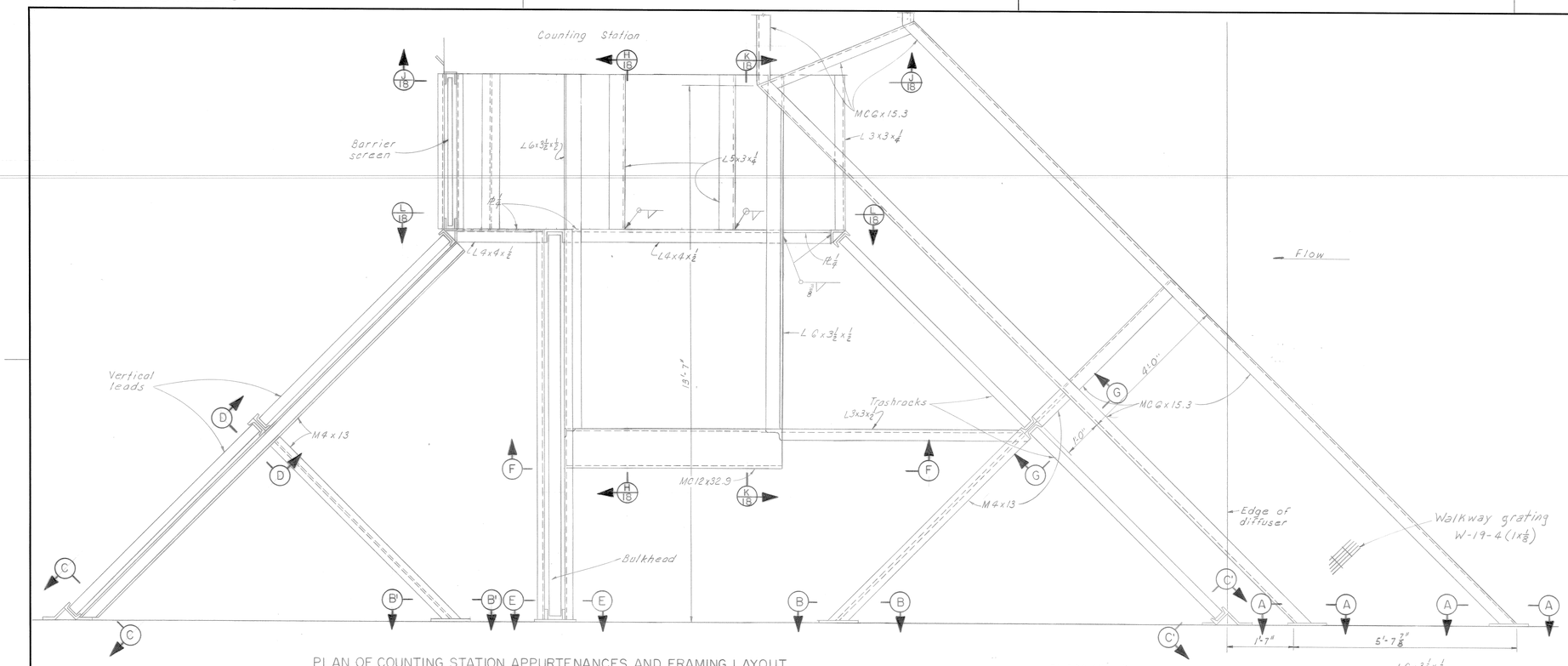

PLAN OF COUNTING STATION APPURTENANCES AND FRAMING LAYOUT

SCALE IN FEET 0 2 3

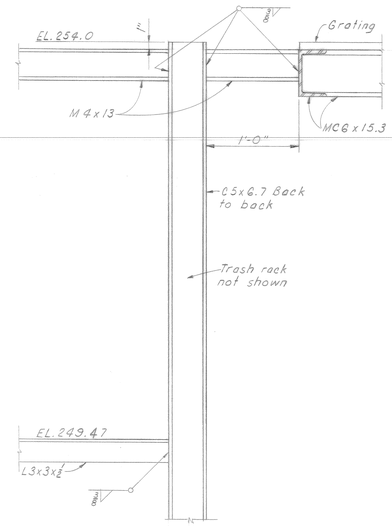

SECTION-G

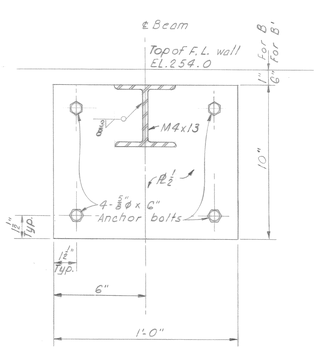

SECTION B & B'

1 As shown
1 Opposite hand

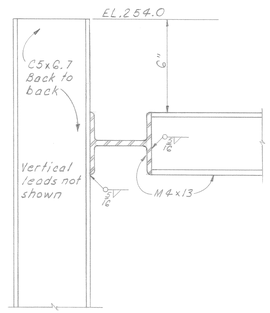

SECTION-D

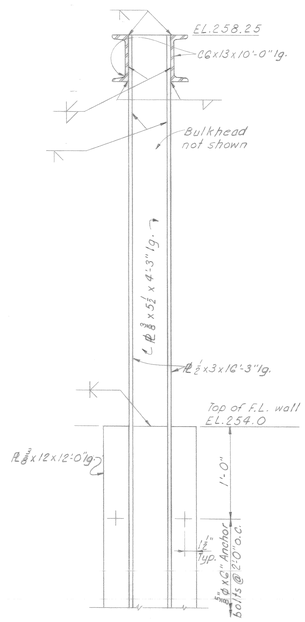

SECTION-E

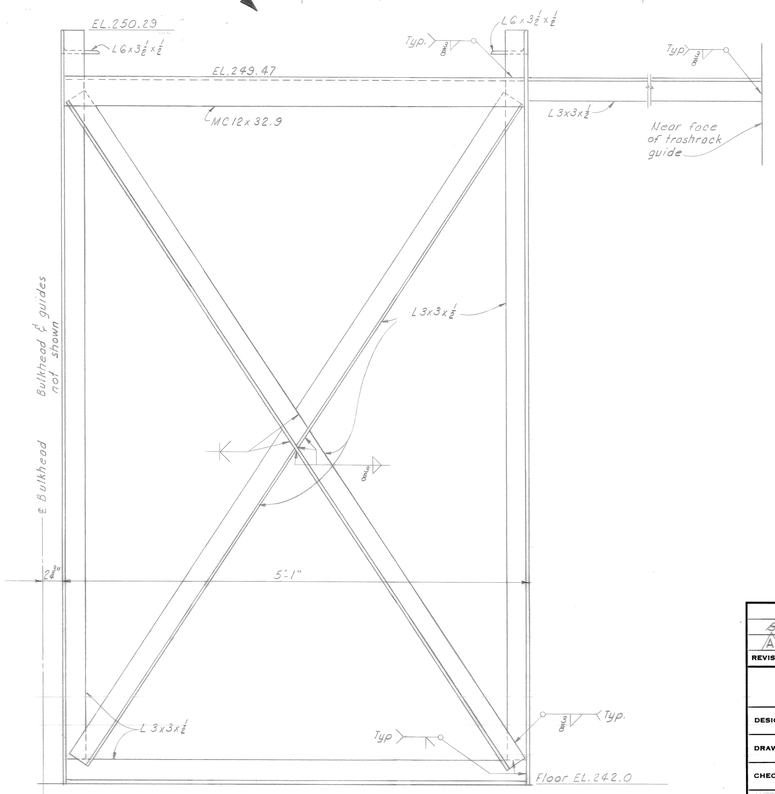

SECTION-F

SCALE IN FEET 0

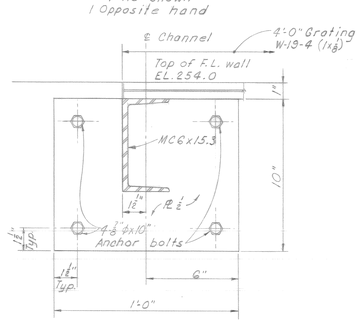

SECTION-A

1 As shown
1 Opposite hand

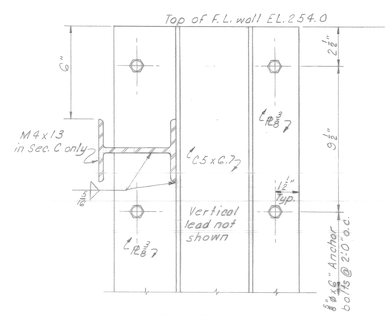

SECTION C & C'

SCALE IN INCHES 3" 0 3" 6" 9" 12"

REVISION	DATE	DESCRIPTION	BY
B	13 June 8	As constructed	
A	7 1 Dec. 01	Added dimensions.	

U. S. ARMY ENGINEER DISTRICT
WALLA WALLA, WASHINGTON

DESIGNED: SARVE
DRAWN: J.L.
CHECKED: S. D. S.
SUPERVISED: CHIEF STRUCT. DES. SEC

JOHN DAY LOCK AND DAM
(LAKE UMATILLA)
COLUMBIA RIVER OREGON AND WASHINGTON

NORTH SHORE FISH LADDER
COUNTING STATION APPURTENANCES AND FRAMING LAYOUT I

SUBMITTED: L. E. Buckler
CHIEF, DESIGN BRANCH

RECOMMENDED:
CHIEF, ENGINEERING DIVISION

APPROVED: Richard M. Connell
COLONEL, C. E. DISTRICT ENGINEER

DATE 71 Nov. 11

SCALE AS SHOWN

INV. NO. 72-B-29

FILE NO.

SHEET 17

JDF-1-5-2/26

CONT. NO. 72-C-94

VOL. NO.

Filmed

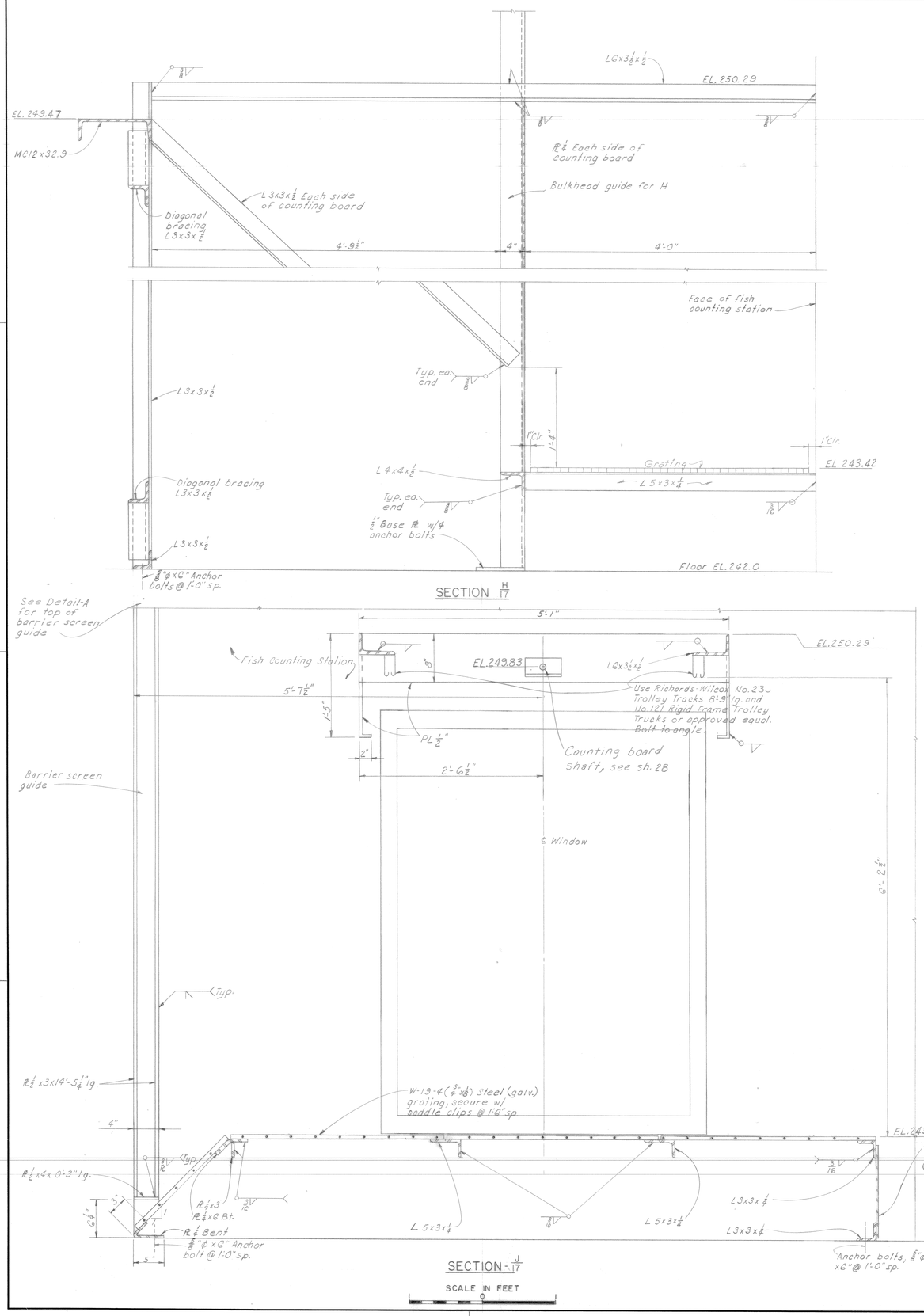

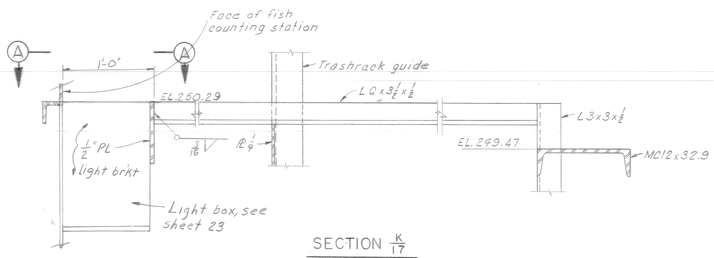

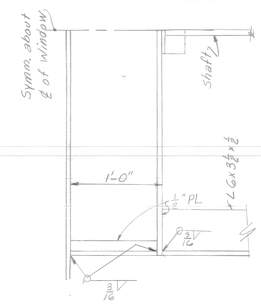

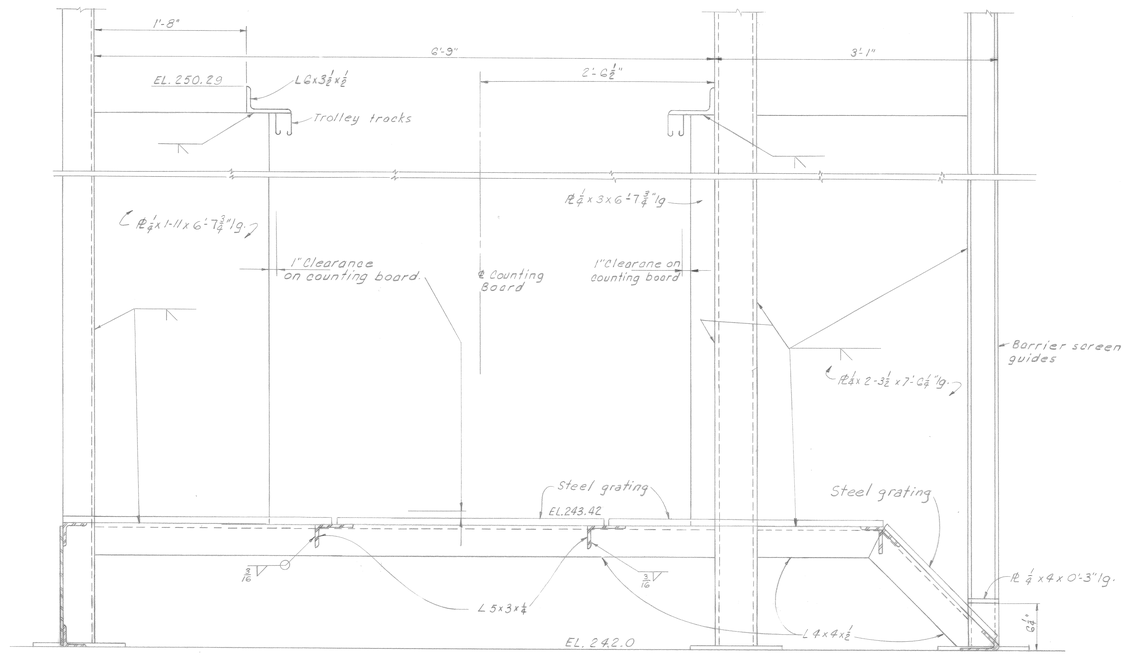

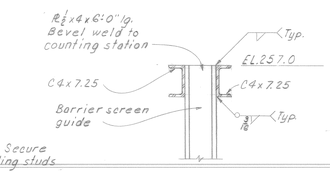

REVISION	DATE	DESCRIPTION	BY
A	13 June 8	As constructed	

U. S. ARMY ENGINEER DISTRICT
WALLA WALLA, WASHINGTON

DESIGNED: SARVE
DRAWN: J.L.
CHECKED: S. D. S.
SUPERVISED: CHIEF, STRUCT. DES. SEC.

JOHN DAY LOCK AND DAM
(LAKE UMATILLA)
COLUMBIA RIVER, OREGON AND WASHINGTON

NORTH SHORE FISH LADDER
COUNTING STATION APPURTENANCES AND FRAMING LAYOUT II

SUBMITTED: CHIEF, DESIGN BRANCH
RECOMMENDED: CHIEF, ENGINEERING DIVISION
APPROVED: COLONEL, C. E. DISTRICT ENGINEER — DATE 71 Nov. 11
SCALE AS SHOWN
INV. NO. 72-B-29
FILE NO.
SHEET 18
JDF-1-5-2/27

CONT. NO. 72-C-94 VOL. NO.

054043
343

CORPS OF ENGINEERS

U. S. ARMY

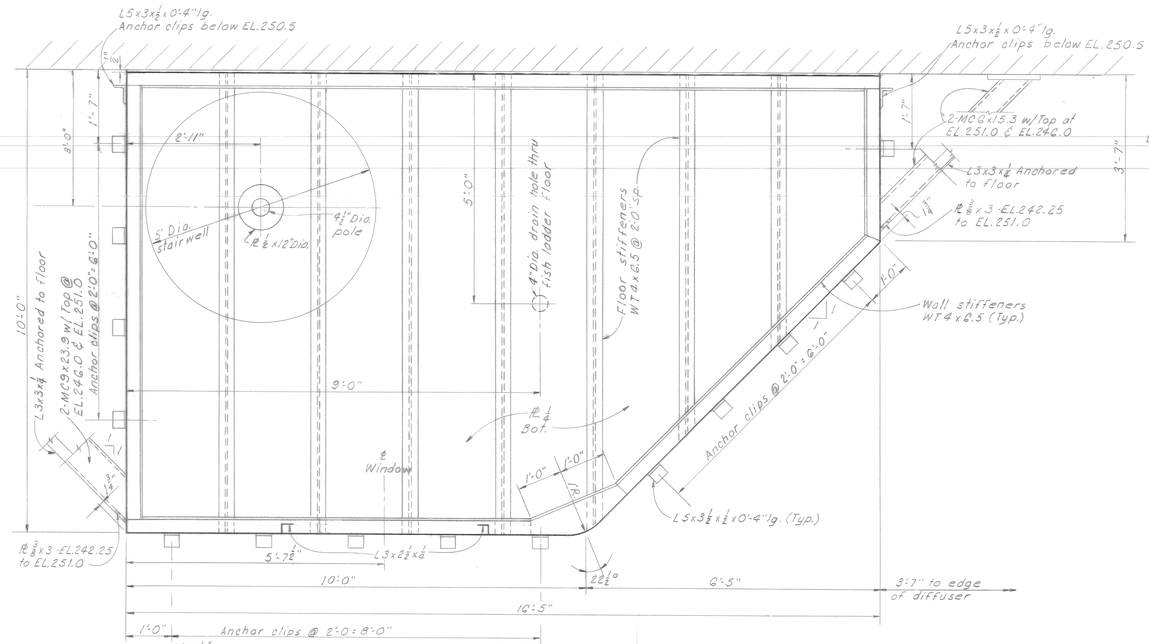

FLOOR FRAMING PLAN-EL.243.61

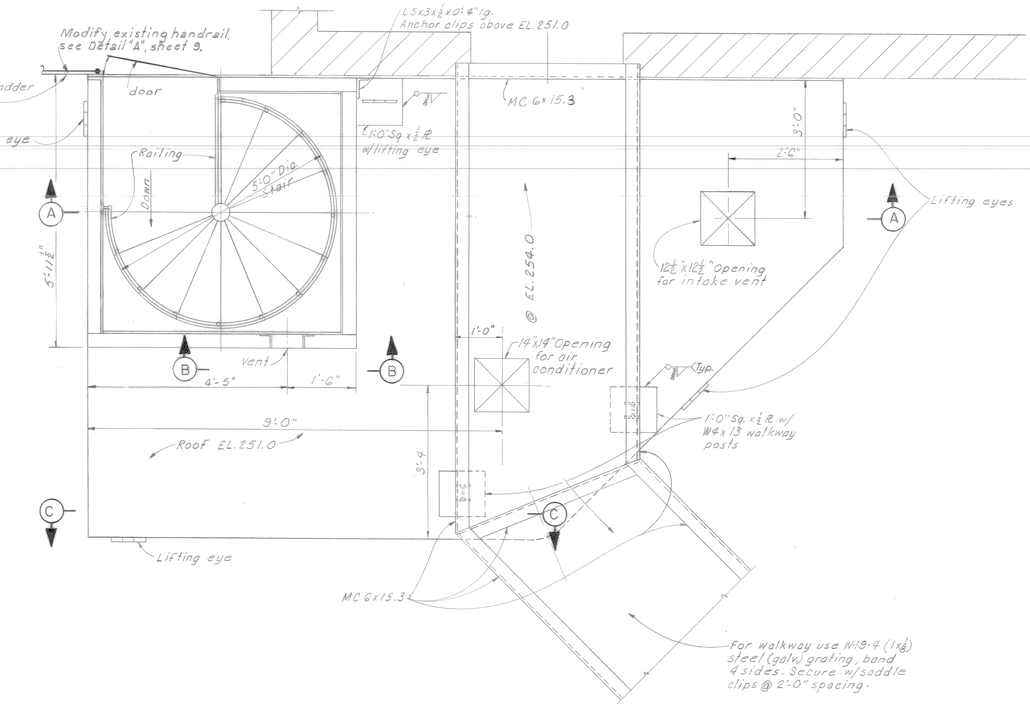

PLAN - EL.254.0

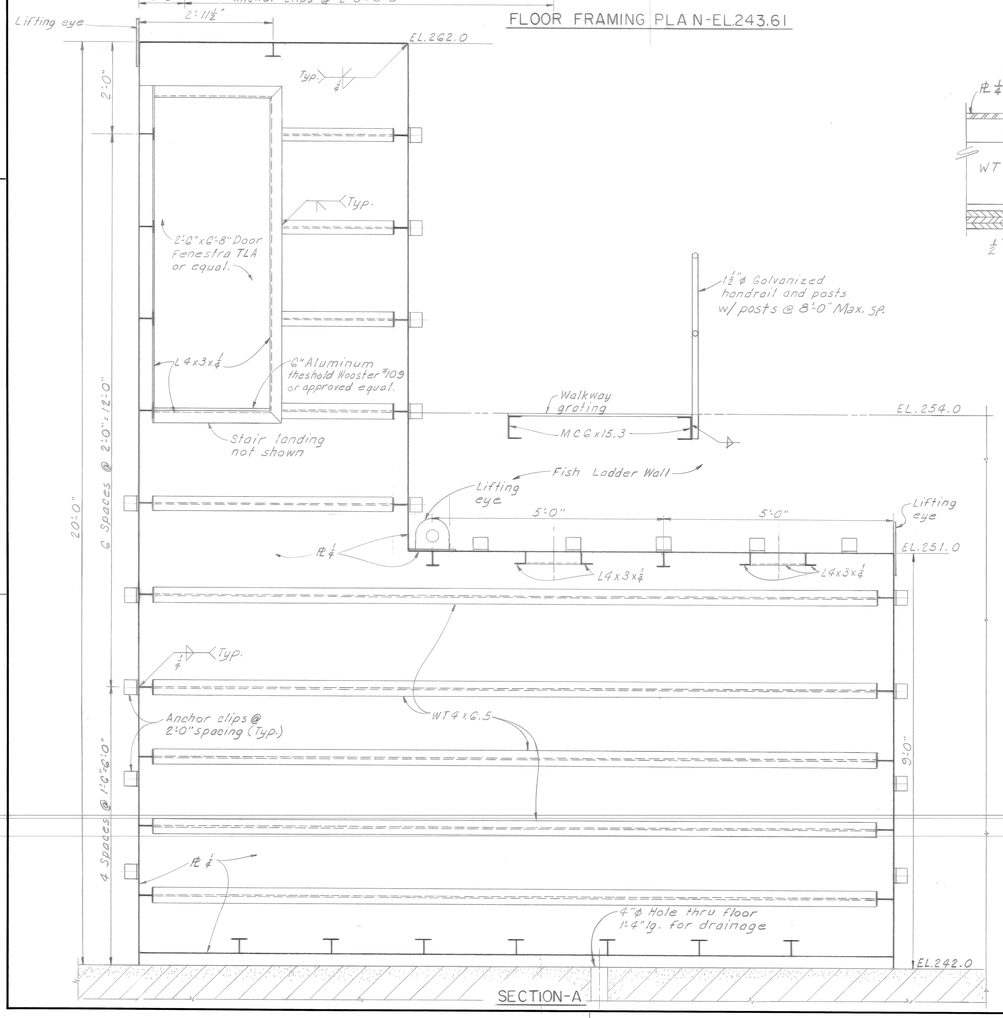

SECTION-A

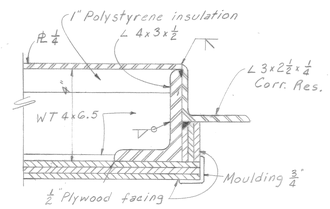

SECTION-D

NOT TO SCALE

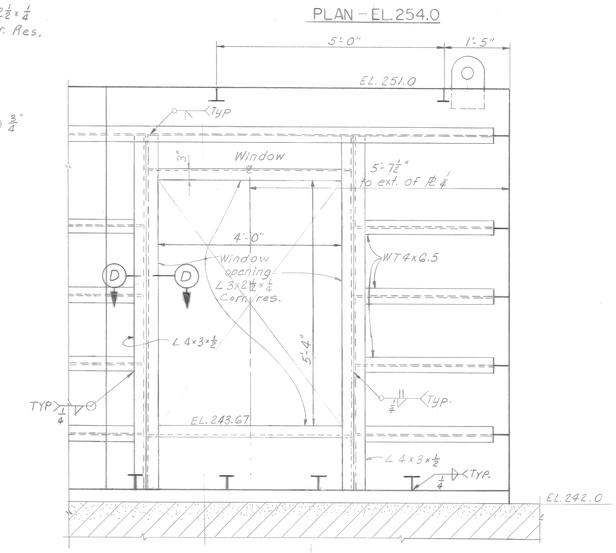

SECTION-C

SCALE IN FEET 0 1 2 3

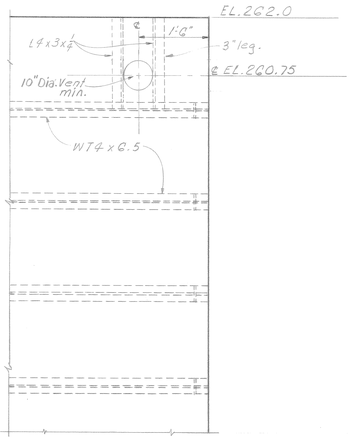

SECTION-B

REVISION	DATE	DESCRIPTION	BY
B	73 June 8	As constructed	
A	71 Dec. 01	Revised concrete line, added note	

U. S. ARMY ENGINEER DISTRICT
WALLA WALLA, WASHINGTON

DESIGNED: Sorve
DRAWN: J.L.
CHECKED: S.D.S.
SUPERVISED: CHIEF, STRUC. DES. SEC.

JOHN DAY LOCK AND DAM
(LAKE UMATILLA)
COLUMBIA RIVER, OREGON AND WASHINGTON
NORTH SHORE FISH LADDER
NEW CONSTRUCTION
FISH COUNTING STATION

SUBMITTED: R. E. Buckler, CHIEF, DESIGN BRANCH
RECOMMENDED: CHIEF, ENGINEERING DIVISION
APPROVED: Richard M. Connell, COLONEL, C. E. DISTRICT ENGINEER — DATE 71 Nov. 11

SCALE AS SHOWN | INV. NO. 72-B-29 | FILE NO. | SHEET 19 | JDF-1-5-2/28

CONT. NO. 72_C_94 VOL. NO.

054043
343

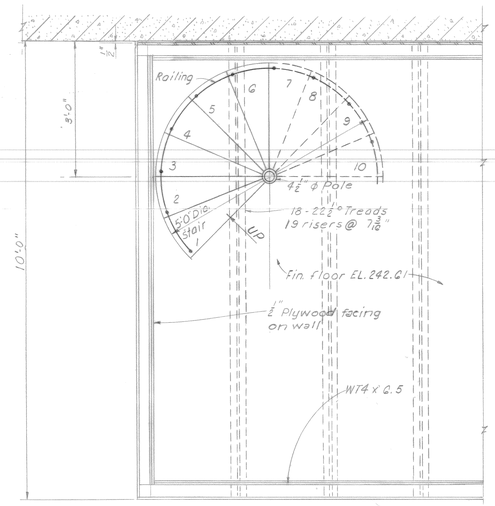

PLAN EL. 243.0

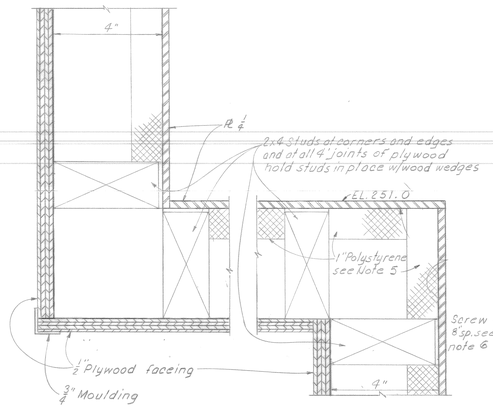

DETAIL-A

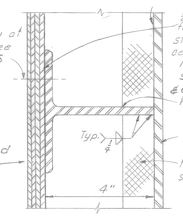

TYPICAL WALL & FLOOR DETAIL

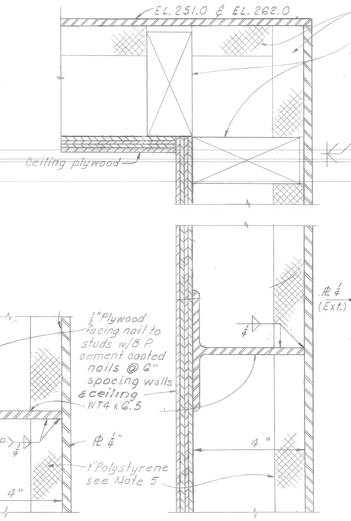

CORNER DETAIL

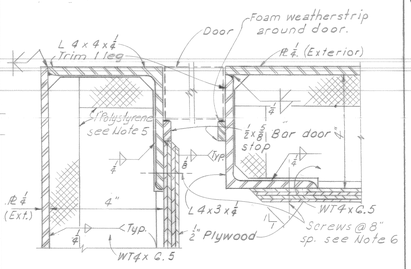

DOOR JAMB-DETAIL

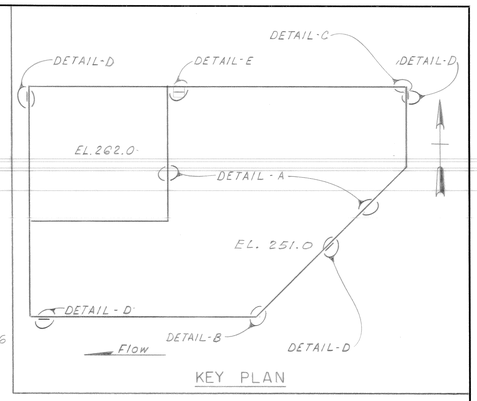

KEY PLAN

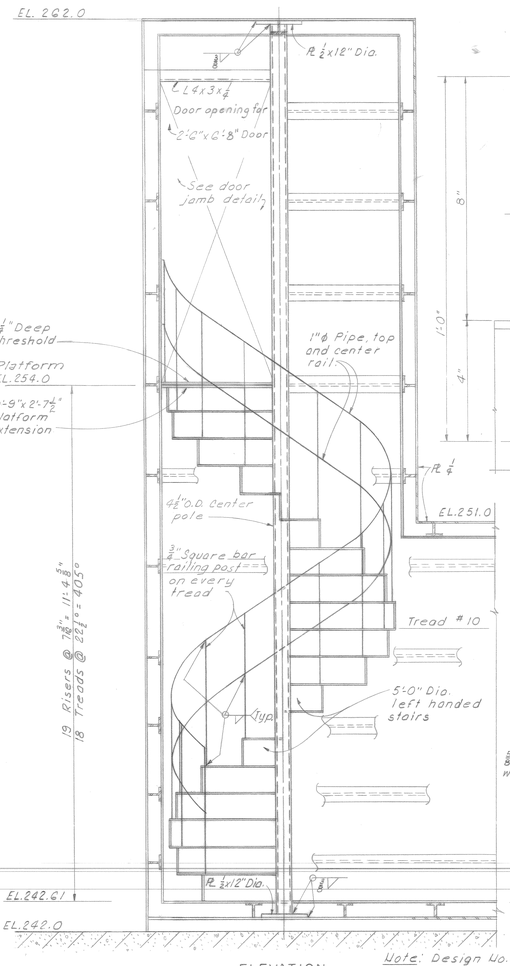

ELEVATION

SPIRAL STAIR

SCALE IN FEET 0 1 2 3

Note: Design No. 301 shown Duvinage Corp. or approved equal.

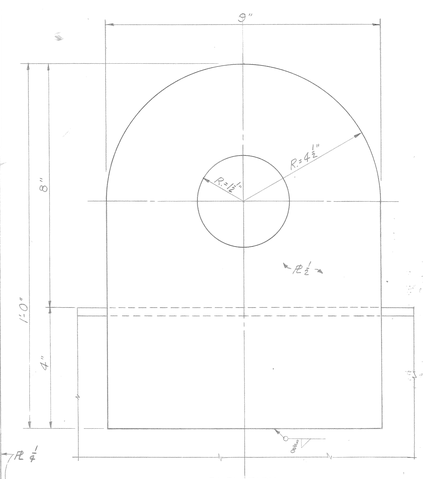

ELEVATION

DETAIL-D
4 REQ'D.

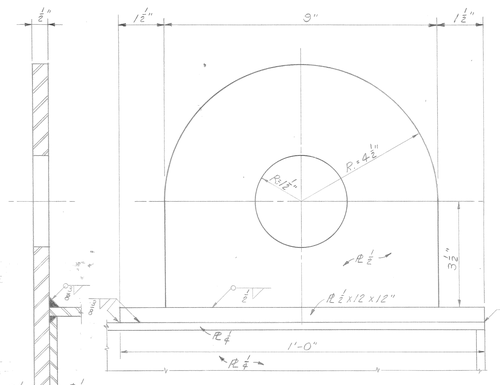

ELEVATION

DETAIL-E
1 REQ'D.

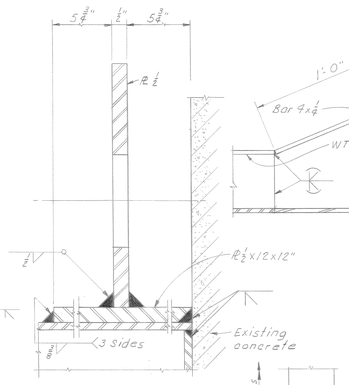

℄ SECTION

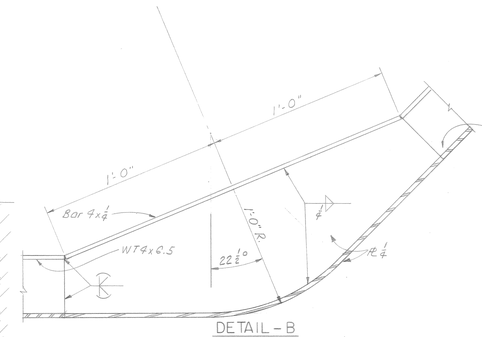

DETAIL-B

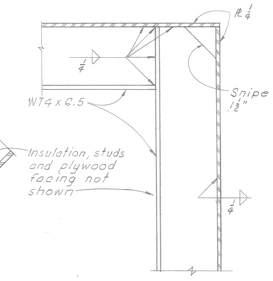

TYPICAL CORNER
DETAIL - C

NOTES

1. Paint ferrous metal surfaces, interior and exterior of fish counting station using System No. 3 vinyl base paint (Federal Std-color # 35240) and interior with a fire retardant latex paint, (color # 35231) see contract specification.
2. Corrosion resistant (corr. res.) steel shall conform to ASTM-A-276 Type 410.
3. For ½" plywood use 5 ply, Group 2, exterior type A-C grade-DFPA using exterior glue.
4. Rubber waterstop of 30 durometer hardness shall be drilled and slotted using seal bars as template to give a tight fit on seal bolts.
5. Use 1" polystyrene insulation conforming to Fed. Spec. HH-I-524a type 2, class B, bonded to ¼" plate with Dow Chemical Mastic #11 or approved equal.
6. Drill ST and secure plywood to ST with a stainless steel, truss type, #6 slotted tapping screw 1" on walls and 1⅛" Lg. on floor.
7. Install tile on floor of counting station, see contract specification.

SCALE IN INCHES 3" 0 3" 6" 9" 12"

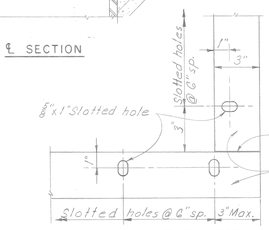

U/S & D/S CORNER DETAIL ELEV. FOR WATERSTOPS

LIFTING EYE

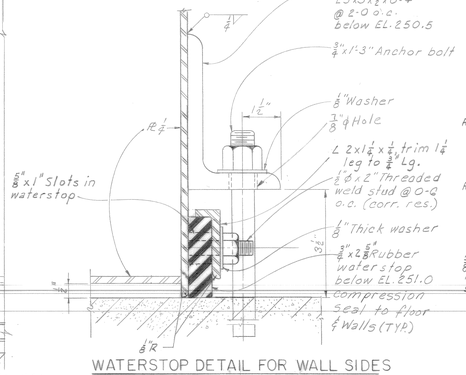

WATERSTOP DETAIL FOR WALL SIDES

BELOW EL. 250.5

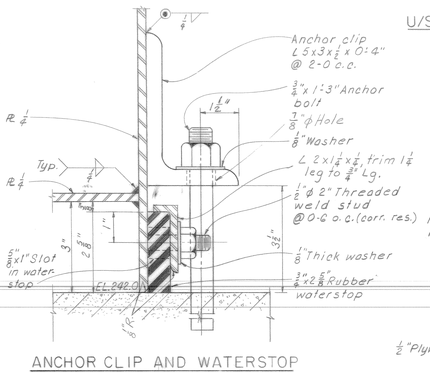

ANCHOR CLIP AND WATERSTOP

DETAIL CHANNEL SIDES

SCALE IN INCHES 2" 0 2" 4" 6"

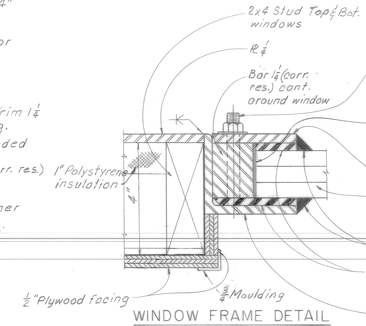

WINDOW FRAME DETAIL

REVISION	DATE	DESCRIPTION	BY
C	73 June 8	As constructed	
B	72 Nov. 14	Minor revisions for clarification as per amendment #1	
A	71 Dec. 01	Revised waterstop to walls & weatherstrip note on door.	

U. S. ARMY ENGINEER DISTRICT
WALLA WALLA, WASHINGTON

DESIGNED: R. Sorve
DRAWN: J. Leigh
CHECKED: S.D.S.
SUPERVISED: CHIEF, STRUCT. DES. SECT.

JOHN DAY LOCK AND DAM
(LAKE UMATILLA)
COLUMBIA RIVER, OREGON AND WASHINGTON
NORTH SHORE FISH LADDER
NEW CONSTRUCTION
FISH COUNTING STATION DETAILS

SUBMITTED: R. E. Buckler, CHIEF, DESIGN BRANCH
RECOMMENDED: CHIEF, ENGINEERING DIVISION
APPROVED: Richard M. Connell, COLONEL, C.E. DISTRICT ENGINEER
DATE: 71 Nov. 11
SCALE AS SHOWN
INV. NO. 72-B-29
SHEET 20
FILE NO. JDF-1-5-2/29

CONT. NO. 72-C-94 VOL. NO.

CORPS OF ENGINEERS

U. S. ARMY

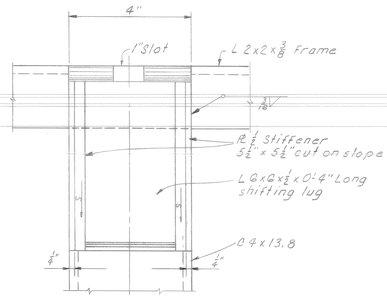

DETAIL-D

NOT TO SCALE

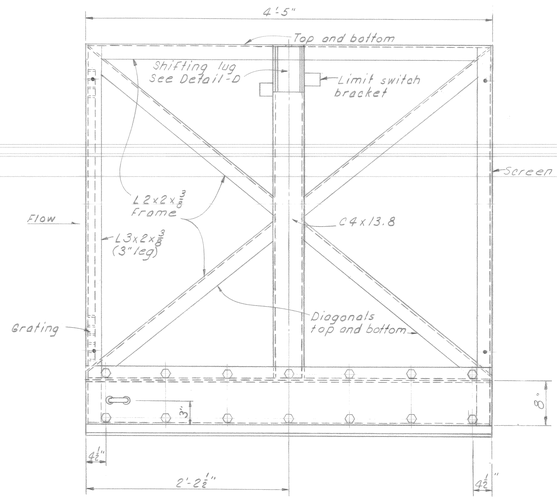

PLAN

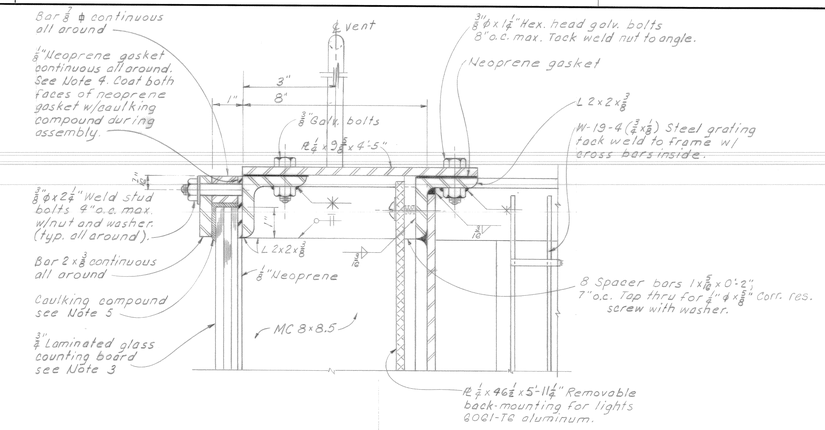

SECTION - B

SCALE IN INCHES

2" 0 2" 4" 6"

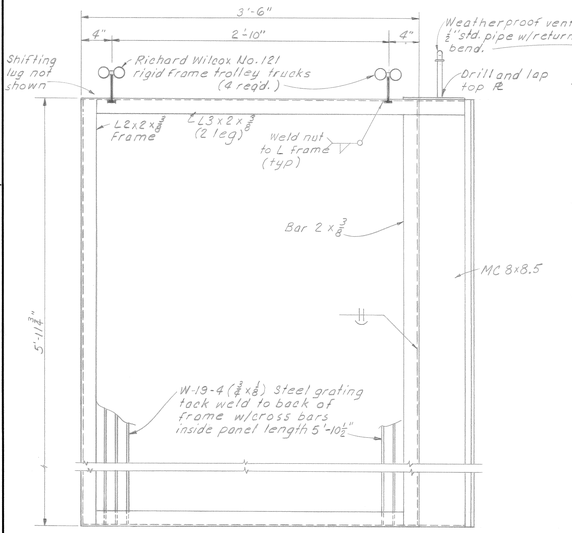

UPSTREAM ELEVATION

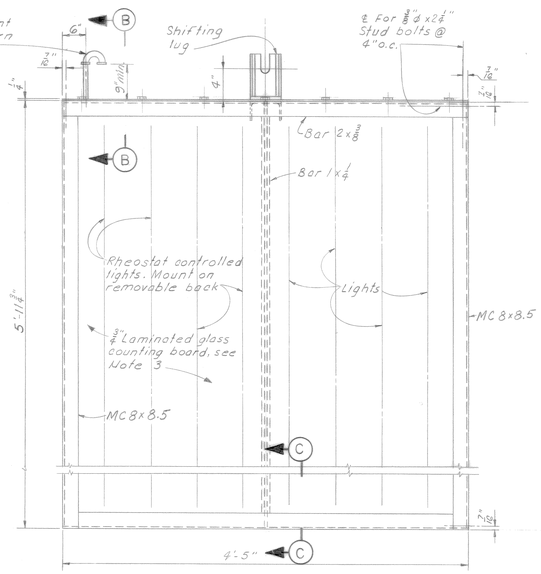

ELEVATION

SCALE IN FEET

0

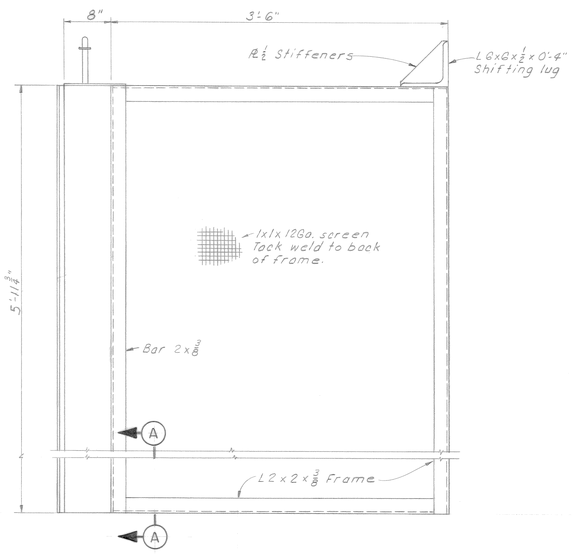

DOWNSTREAM ELEVATION

NOTES:

1. The weight of the vertical counting board is approx. 1200 lb.
2. All structural steel shown on this drawing shall conform to ASTM A-36 specifications and shall be galvanized after fabrication and in accordance with the contract specs. Repair damaged galvanizing using system No. 12.
3. The counting board shall be a 3/8" lamination of 3 pieces of 1/4" tempered plate glass. The finished glass shall provide an even diffusion of light. The inside face of the inside lamination shall have a mud-grind finish to help provide an even diffusion of light. The vertical counting board will be operated with the bottom of the glass 5'-6" below the water surface.
4. The neoprene gasket material used around the window shall have a shore durometer index hardness of 45.
5. The calking compound used around the window shall be a polysulfide rubber caulking compound conforming to American Standard A116.1 class A or B.
6. All joints between members shall be welded with 3/16" fillet welds unless other wise shown.

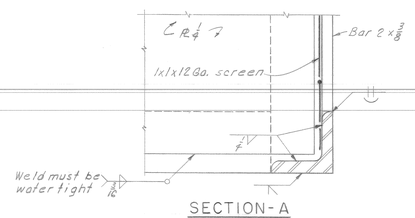

SECTION-A

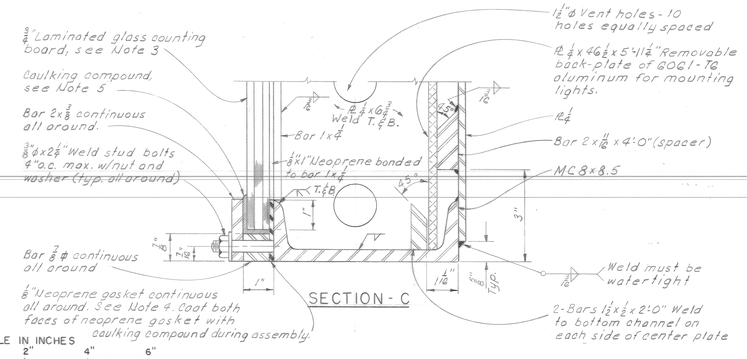

SECTION-C

SCALE IN INCHES

2" 0 2" 4" 6"

REVISION	DATE	DESCRIPTION	BY
B	72 June 8	As constructed	
A	71 Dec. 01	Changed galv. screw to stainless.	

U. S. ARMY ENGINEER DISTRICT
WALLA WALLA, WASHINGTON

DESIGNED: SARVE
DRAWN: J.L.
CHECKED: S.D.S.
SUPERVISED: CHIEF, STRUCT DES SEC

JOHN DAY LOCK AND DAM
(LAKE UMATILLA)
COLUMBIA RIVER OREGON AND WASHINGTON

NORTH SHORE FISH LADDER
NEW CONSTRUCTION
VERTICAL COUNTING BOARD

SUBMITTED: CHIEF, DESIGN BRANCH
RECOMMENDED: CHIEF, ENGINEERING DIVISION
APPROVED: COLONEL, C. E. DISTRICT ENGINEER
DATE 71 Nov. 11
SCALE AS SHOWN
INV. NO. 72-B-29
FILE NO.
SHEET 21
JDF-1-5-2/30

CONT. NO. 72-C-94

VOL. NO.

058083
343

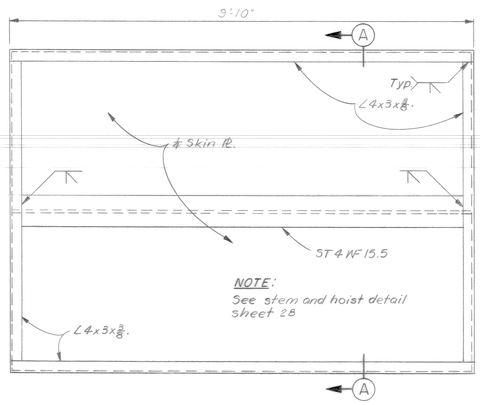

D/S ELEVATION

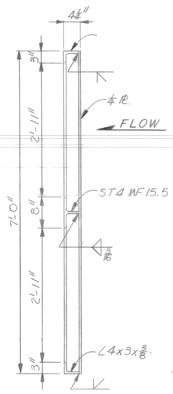

SECTION A

BULKHEAD

1 REQUIRED

SCALE IN FEET

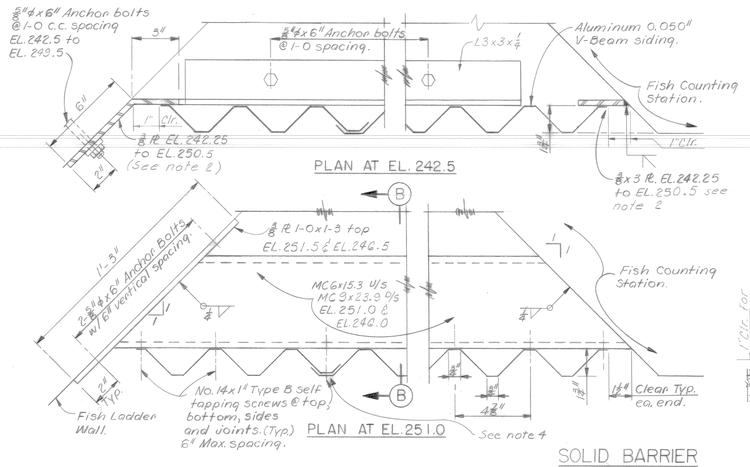

SOLID BARRIER

SCALE IN INCHES

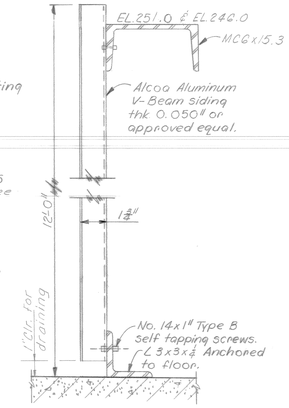

SECTION B

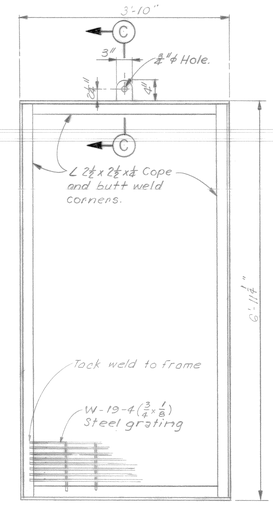

ELEVATION

SCALE IN FEET

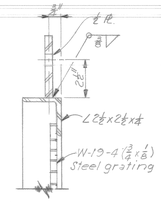

SECTION C

NOT TO SCALE

BARRIER SCREEN

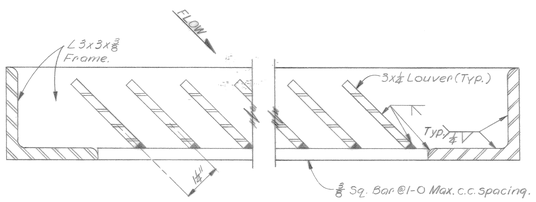

SECTIONAL PLAN D

SCALE IN INCHES

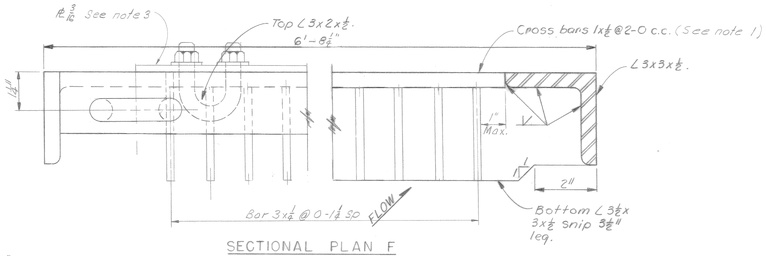

SECTIONAL PLAN F

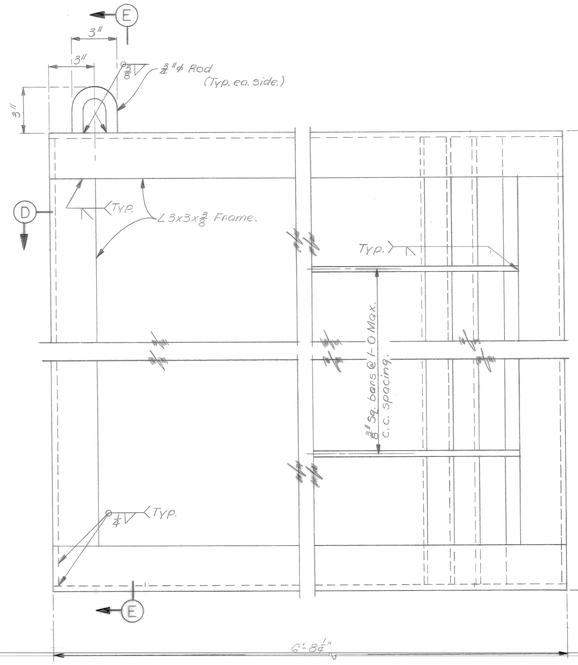

ELEVATION

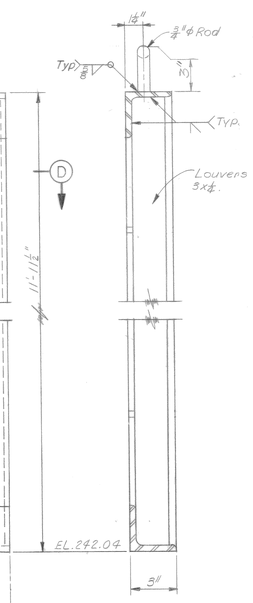

SECTION E

VERTICAL LEAD RACKS

2 Req'd.

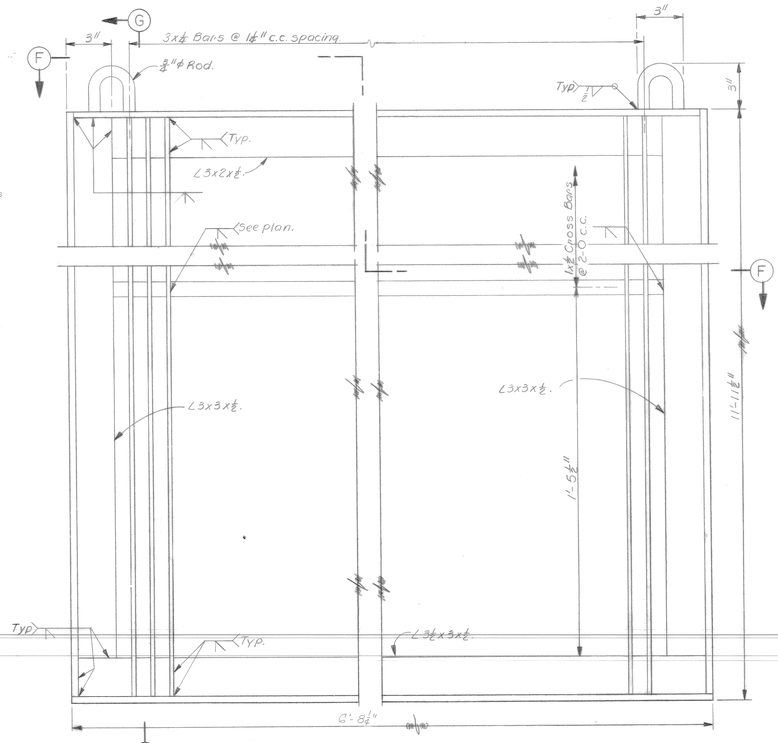

ELEVATION

SCALE IN INCHES

TRASH RACK

2 REQUIRED

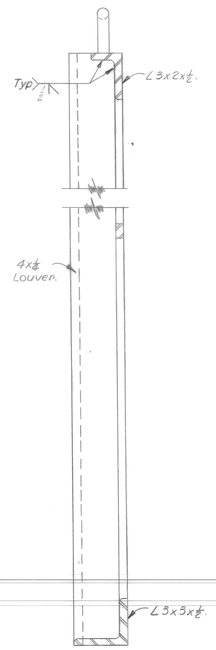

SECTION G

Notes:

1. If grating is provided for trashrack place cross bars to inside of frame as shown.
2. Provide 1'-0" break in Pl. 3/8 support at EL. 245.5 to EL. 242.5 for channel support.
3. Bolt Pl. 3/8" x 2'-0" x 0'-2 1/2" to trashrack at EL. 248.0 to EL. 250.0 with 6 - 5/8"ϕ U-bolts through the bar 3x1/4.
4. Bolt joint with No. 14 x 3/4" S.S. mach. screws with nuts and a S.S. washer under screw head and nut. Locate machine screw at top, bottom, and 6" centers along overlaping joints.

REVISION	DATE	DESCRIPTION	BY
C	73 June 8	As constructed	
B	72 March	Added note for clarification as per amendment #1	
A	71 Dec. 01	Added sheet No.	

U. S. ARMY ENGINEER DISTRICT
WALLA WALLA, WASHINGTON

JOHN DAY LOCK AND DAM
(LAKE UMATILLA)
COLUMBIA RIVER OREGON AND WASHINGTON

NORTH SHORE FISH LADDER
NEW CONSTRUCTION
APPURTENANT STRUCTURES

DESIGNED: R. Sarve
DRAWN: G.D.F.
CHECKED: S.D.S.
SUPERVISED: Paul Rosenkranz, CHIEF, STRUCT. DES. SECT.
SUBMITTED: R. E. Buckler, CHIEF, DESIGN BRANCH
RECOMMENDED: A. L. Drake, CHIEF, ENGINEERING DIVISION
APPROVED: Richard M. Connell, COLONEL, C. E. DISTRICT ENGINEER — DATE 71 Nov. 11
SCALE AS SHOWN
INV. NO. 72-B-29
SHEET 22
FILE NO. JDF-1-5-2/31

CONT. NO. 72-C-94

VOL. NO.

Filmed

054041-343

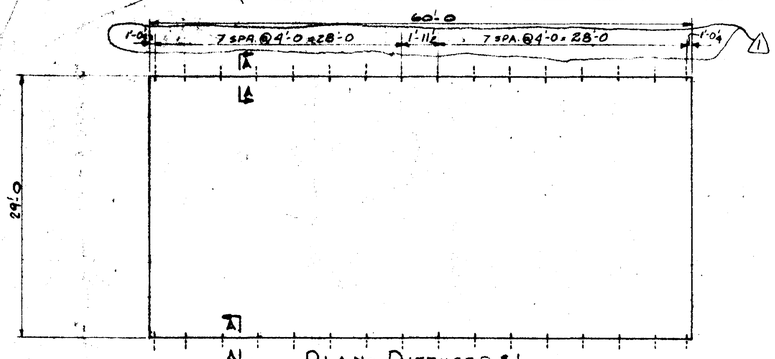

PLAN - DIFFUSER #1

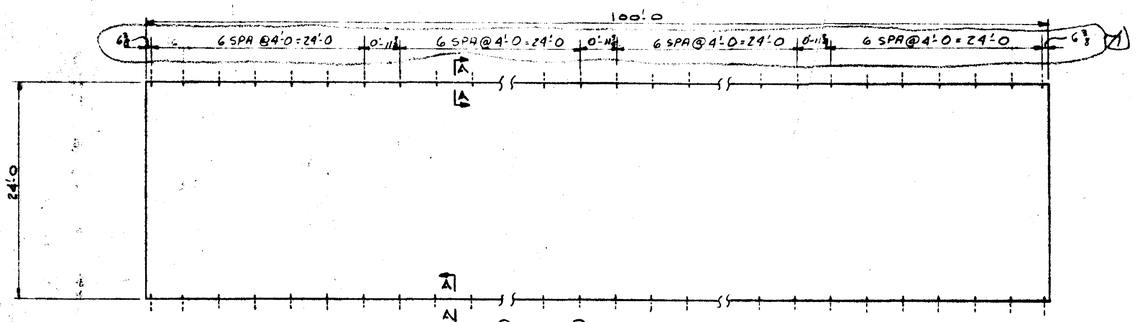

PLAN - DIFFUSER #2

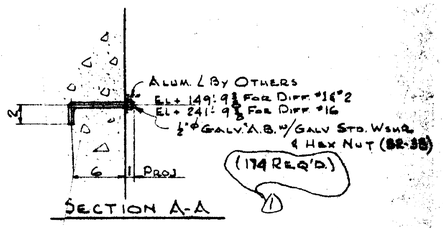

SECTION A-A

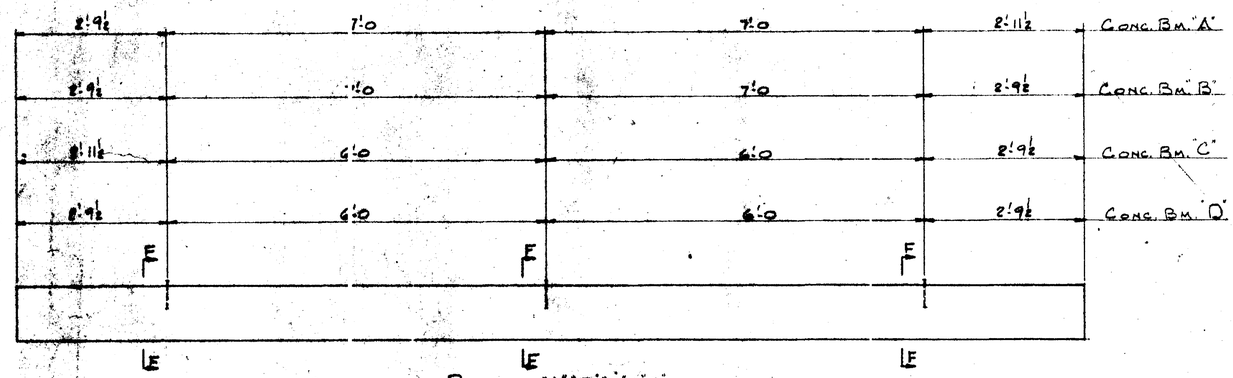

CONCRETE BEAMS "A", "B", "C", & "D"

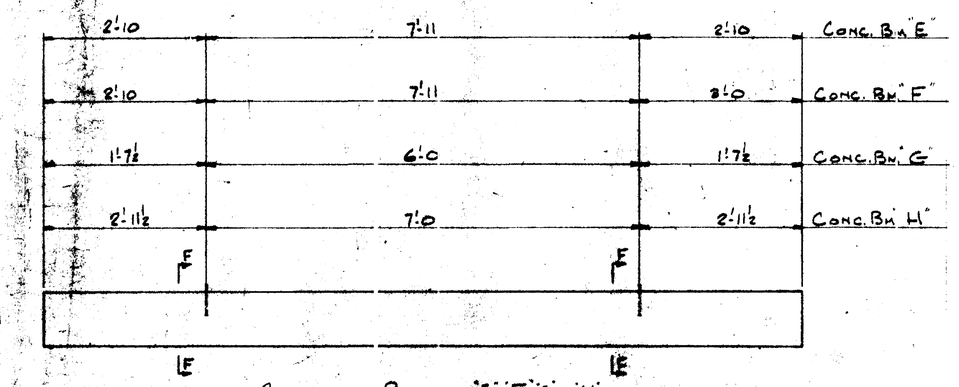

CONCRETE BEAMS "E", "F", "G", & "H"

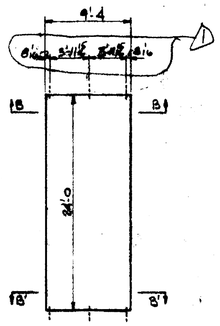

PLAN - DIFFUSERS #3 THRU #15

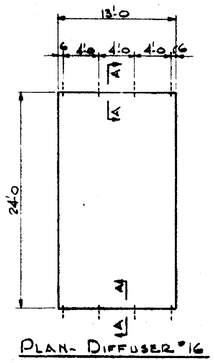

PLAN - DIFFUSER #16

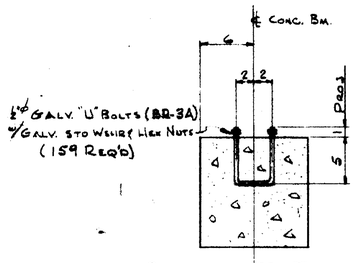

SECTION F-F

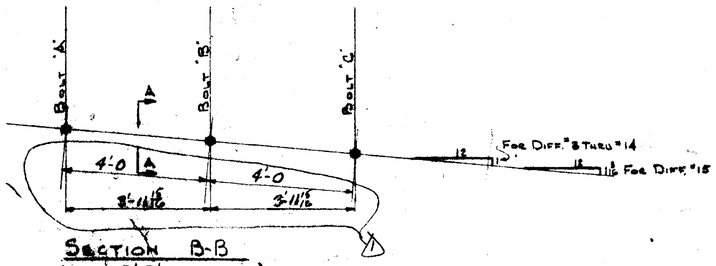

SECTION B-B
(SECT. B'-B' OPP. HAND)

DIFF. #	BOLT "A" ELEVATION	BOLT "B" ELEVATION	BOLT "C" ELEVATION
3	150'-6⅛	150'-2⅛	149'-10⅛
4	151'-6⅛	151'-2⅛	150'-10⅛
5	152'-8⅛	152'-4⅛	152'-0⅛
6	153'-8⅛	153'-4⅛	153'-0⅛
7	155'-6⅛	155'-2⅛	154'-10⅛
8	156'-6⅛	156'-2⅛	155'-10⅛
9	157'-8⅛	157'-4⅛	157'-0⅛
10	158'-8⅛	158'-4⅛	158'-0⅛
11	160'-6⅛	160'-2⅛	159'-10⅛
12	161'-6⅛	161'-2⅛	160'-10⅛
13	162'-8⅛	162'-4⅛	162'-0⅛
14	163'-8⅛	163'-4⅛	163'-0⅛
15	165'-7⅛	165'-3	164'-10⅛

APPROVED

Subject to conformity with plans and specifications, correction of errors or omissions, and to fulfillment of any required tests. Approval does not cover detail dimensions, or accessibility for assembling and fastening.

U. S. ARMY ENGINEER DISTRICT
WALLA WALLA

Date JUN 21 1961

REF. DWGS. JDF-1.5.2/9 SHEET #242

	No.	Date	Blue Prints To	
	5	9-13	APVL	HP
	4	10-14	SHOP	K
	6	6-7	APVL	

Isaacson Iron Works
STRUCTURAL STEEL DIVISION
SEATTLE, WASHINGTON

Revisions: Add "T" Approved with Contract, Dwg No X-60016B 6-7-61

DIFFUSER ANCHOR BOLTS (BID ITEM #120)

JOHN DAY LOCK & DAM

U.S. GOVERNMENT

U.S. ARMY CORPS OF ENGINEERS

Drawn 10 | Stamp 9-12-60 | Scale 6.7 | Drawing No. NN 945

JDF-60-150-120-5

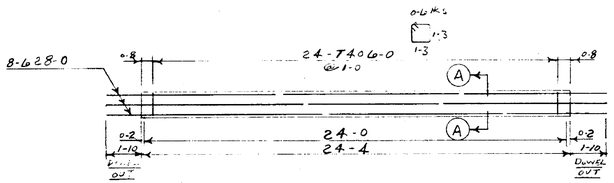

PLAN

SCALE 1/4" = 1-0

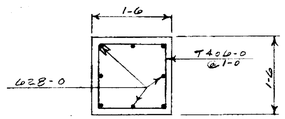

SECTION A

SCALE 3/4" = 1-0

NOTE:
0-2 CLR TO MAIN REINF.

PRECAST STRUTS

NORTH-SHORE FISH LADDER SECTIONS 1-5

✓	M-H-M&A	FWL - PRECAST STRUTS 1/1
✓	✓	JDF-1-4-2/30 ✓ 207
✓	✓	JDF-1-4-2/26 ✓ 203
✓	✓	JDF-1-4-2/23 ✓ 200
✓	✓	JDF-1-4-2/19 ✓ 196
✓	✓	JDF-1-4-2/18 ✓ 195
✓	✓	JDF-1-4-2/17 ✓ 194
REF DWG	ARMY ENGR.	JDF-1-4-2/13 SHT 190

BILL OF MATERIAL

FISH LADDER SEC NO	NO REQD.
FWL-1	11
FWL-2	5
FWL-3	5
FWL-4	5
FWL-5	5
TOTAL	31

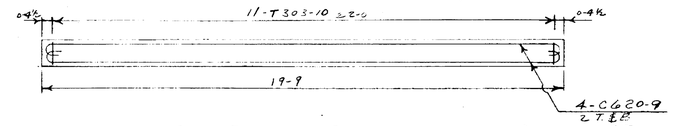

ELEV. - DIFFUSER BEAM A (30 REQD)

SCALE 3/8" = 1-0

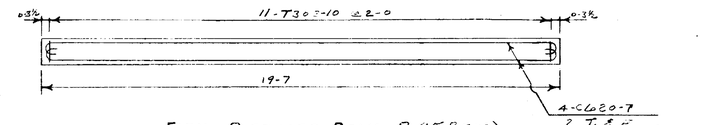

ELEV. - DIFFUSER BEAM B (15 REQD)

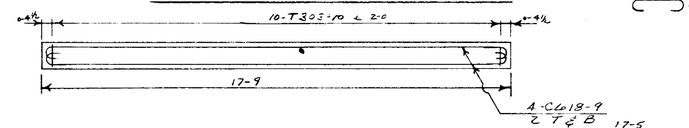

ELEV. - DIFFUSER BEAM C (11 REQD)

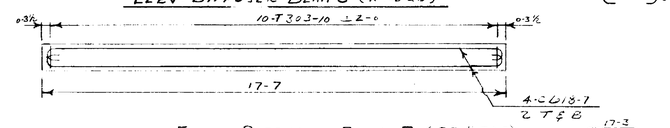

ELEV. DIFFUSER BEAM D (33 REQD)

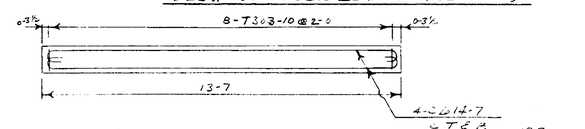

ELEV. DIFFUSER BEAM E (11 REQD)

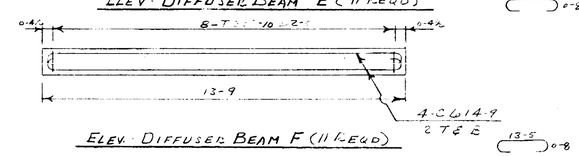

ELEV. DIFFUSER BEAM F (11 REQD)

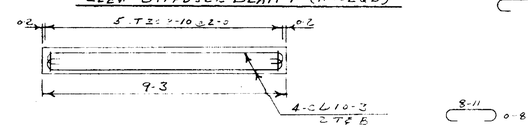

ELEV. DIFFUSER BEAM G (143 REQD)

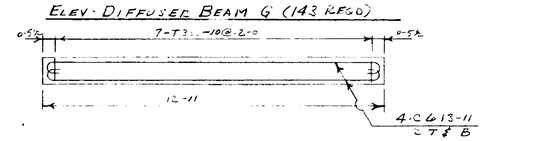

ELEV. - DIFFUSER BEAM H (11 REQD)

SCALE 3/8" = 1-0

PRECAST DIFFUSER BEAM DETAILS

ELEV. SCALE 3/8" = 1-0

NOTE:
0-2 CLR TO MAIN REINF.

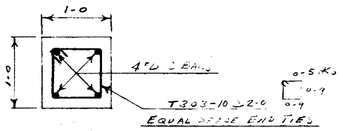

TYPICAL SECTION OF DIFFUSER BEAMS.

SCALE 1" = 1-0

✓	M-H-M&A	FWL - DIFFUSER BMS.
REF DWG	ARMY ENGR	JDF 1-5-2/9 SHT 242

APPROVED

Subject to conformity with plans and specifications, correction of errors or omissions, and to fulfillment of any required tests. Approval does not cover detail dimensions, or accessibility for assembling and fastening.

U. S. ARMY ENGINEER DISTRICT
WALLA WALLA

DEC 13 1960

Date

REV.	DATE	DESCRIPTION	BY	APRV

GILMORE-SKOUBYE
STEEL CONTRACTORS

JOHN DAY DAM - R670
NORTH SHORE FISH LADDER
PRECAST STRUT & DIFFUSER BMS

DR. JDS	DATE 12-7-60	CHECKED	DWG. NO. R 3014

JDF -60-150-44-43

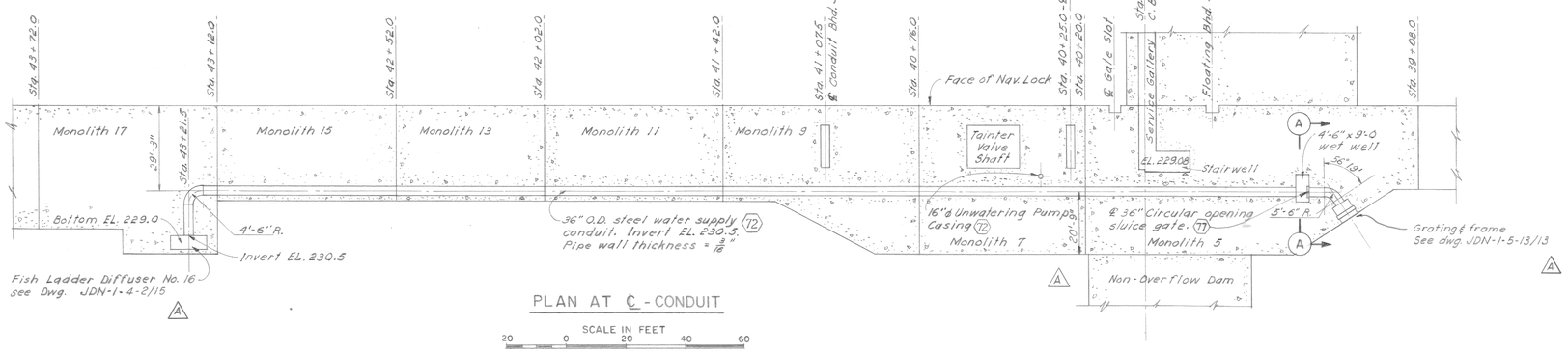

PLAN AT ℄ - CONDUIT

SCALE IN FEET
20 0 20 40 60

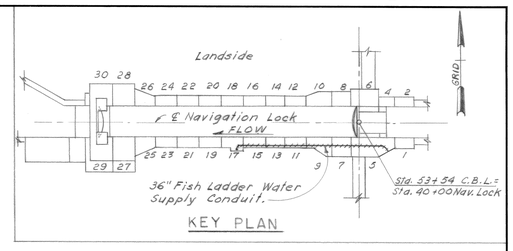

KEY PLAN

REFERENCE DRAWINGS:

Monolith 5 Plans ------- JDN-1-4-2/3
Monolith 17 Plans ------- JDN-1-4-2/15

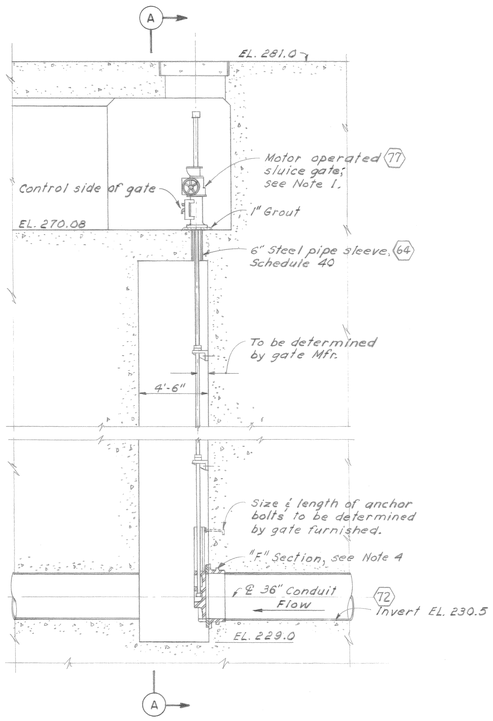

SECTION B

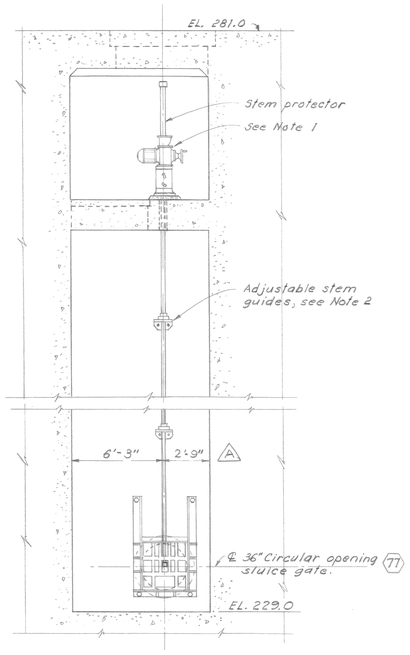

SECTION A

SCALE IN FEET
4 0 4 8 12

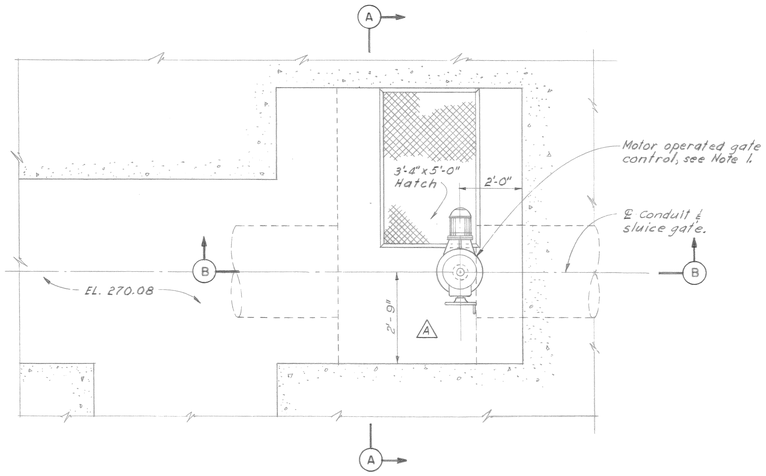

PLAN - GATE CONTROL ROOM

SCALE IN FEET
2 0 2 4 6

NOTES:

1. Gate shall be provided with motorized gate controls, Limitorque or approved equal. See Specs., for complete list of requirements.
2. Gate stem shall be A.I.S.I., type 410, stainless steel (12% Cr.). Stem guides shall be adjustable & shall have A.I.S.I., type 303 (18% Cr., 8% Ni) stainless steel bushings. Size & splicing of stems and spacing of guides shall be as recommended by gate manufacturer.
3. Gate shall be bronze mounted slide gate, flat frame of size indicated. Gate and appurtenances shall be designed for static & operating seating head of 10 Ft., and unseating head of 35 Ft., @ ℄ of gate.
4. Thimble section "F" type, 12" long, cast iron to suit valve furnished.
5. Stem couplings, manganese bronze, threaded & pinned to the stems. All couplings of the same size to be interchangeable.
6. Sluice gate & accessories under bid item (77)
7. Steel pipe under bid item (72)

REVISION	DATE	DESCRIPTION	BY
B		AS CONSTRUCTED	
A	16 Oct 59	Reference dwg. Nos. added. Dimensions added & changed	

U. S. ARMY ENGINEER DISTRICT
WALLA WALLA, WASHINGTON

DESIGNED: R. BLACK
DRAWN: R. J. J.
CHECKED: BEERY
PREPARED: M. C. Croker
CHIEF, MECH. DES. SEC.

JOHN DAY LOCK AND DAM
COLUMBIA RIVER, OREGON AND WASHINGTON
NAVIGATION LOCK
FISH LADDER WATER SUPPLY CONDUIT AND SLUICE GATE
PLAN AND SECTIONS

SUBMITTED: Otto R. Lunn
CHIEF, DESIGN BRANCH
RECOMMENDED: E. C. Franzon
CHIEF, ENGINEERING DIVISION
APPROVED: Paul H. Seymour
COLONEL, C. E. DISTRICT ENGINEER
DATE 27 Aug 59
SCALE AS SHOWN
INV. NO. ENG. C-60-2
FILE NO.
SHEET 39
JDN-1-3-20/1

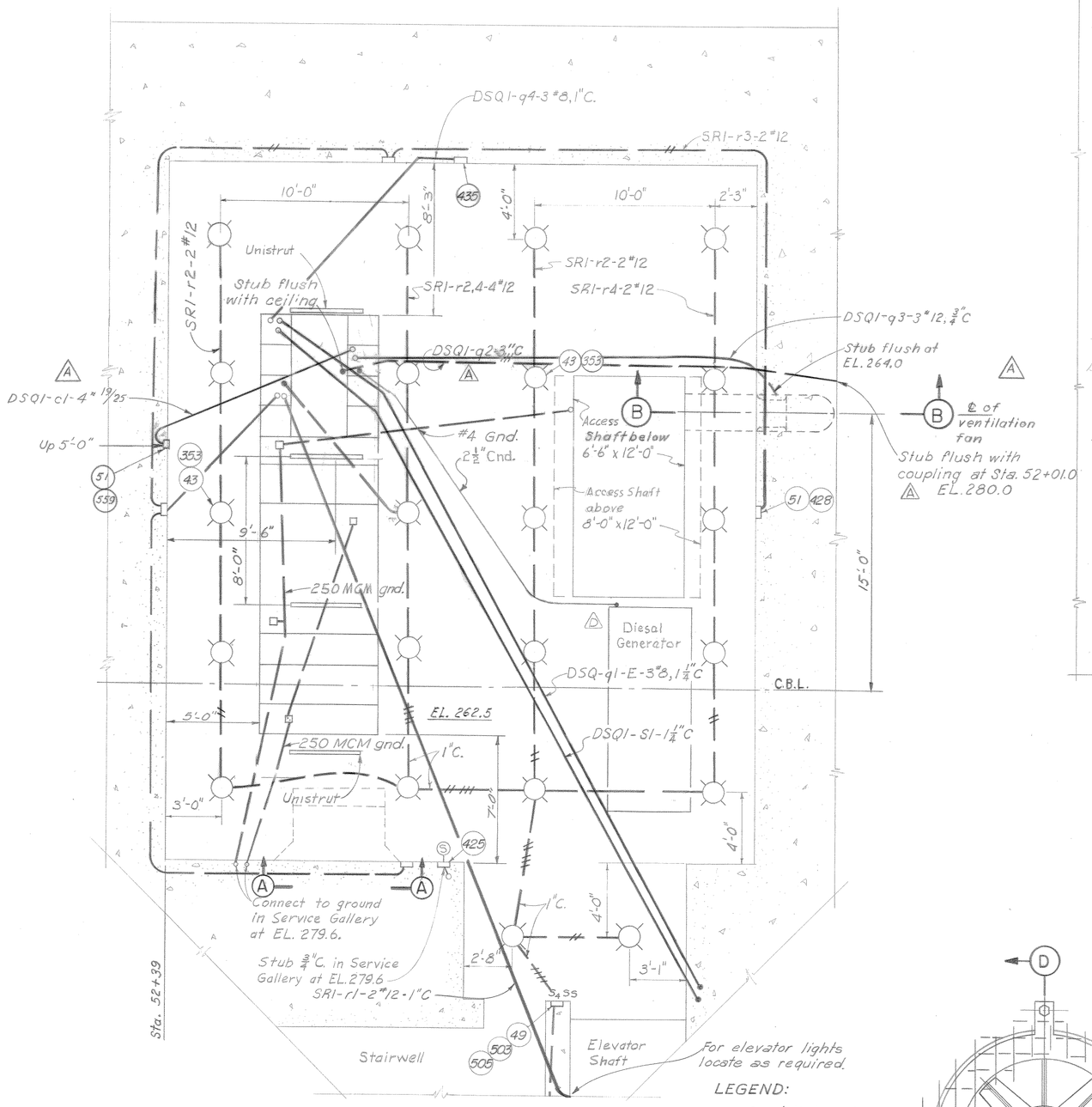

SUBSTATION ROOM

SCALE IN FEET

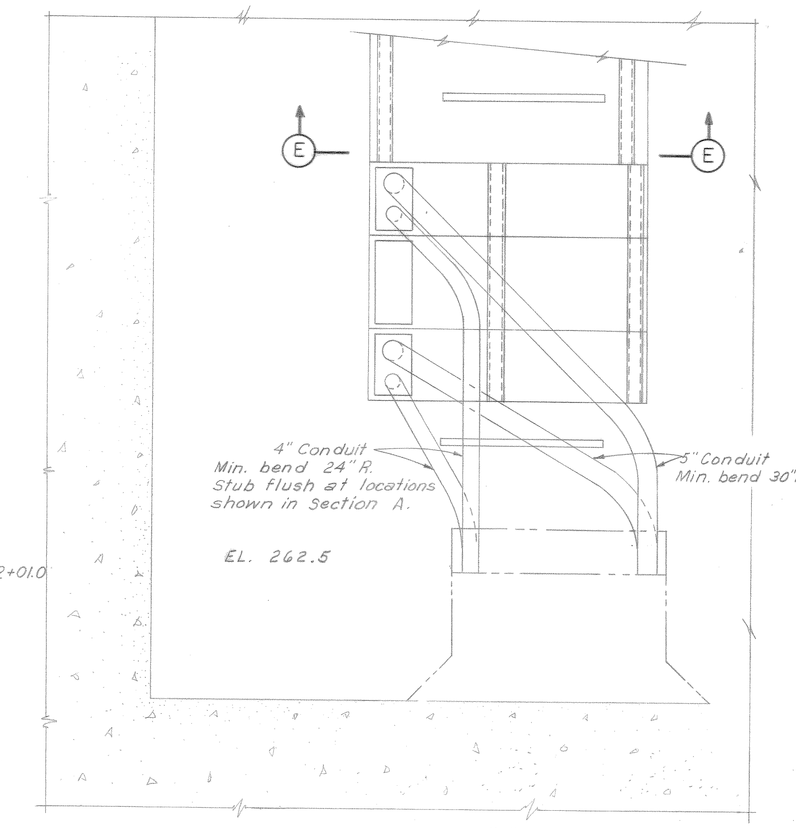

DETAIL "A"

4160 V. CONDUIT INSTALLATION

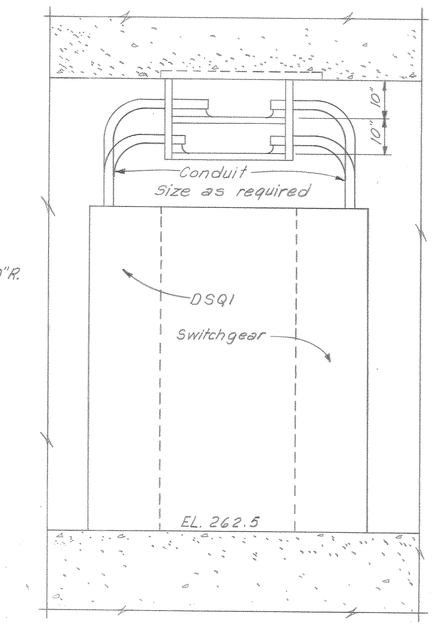

SECTION E

SCALE IN FEET

ITEM	QUANT.	PART	DESCRIPTION	BID ITEM
49	1	Box	FD03 three gang flush	216
51	5	Box	FD single gang	215
43	22	Box	GRF 2 flush mounted	216
128	4	Bushing	Insulating, size as required, OZ type BB	228
180	15 LF	Conductor	Ground #4	226
185	82 LF	Conductor	Ground 250 MCM	226
196	307 LF	Conduit	3/4" Rigid steel galvanized	215
197	185	Conduit	1" Rigid steel galvanized	216
203	30 LF	Conduit	4" Rigid steel galvanized	222
205		Conduit	Flexible, equal to sealtite	
225	2	Connector	Ground, Burndy GFG, size as required	226
204	40 LF	Conduit	5" Rigid steel galvanized	
353	22	Light	See detail "K1" Dwg. No. JDN 1-6-14/22	228
435	1	Receptacle	3 wire 4 pole 600 v 30 amp, C-H AEQ 1348	233
425	1	Receptacle	Sound powered telephone outlet (flush mounted 5'-0"	237
			above floor). See Specs.	
503	2	Switch	One way	228
505	1	Switch	Four way	228
559	1	Thermostat	120 v; Minneapolis-Honneywell type T42B	240
428	4	Receptacle	Duplex convenience, 2W, 3P, 15amp, 125 volts, Bryant #526-1	228
			and stainless steel plate #97101	
5	10	Angle	Angle connector, Unistrut # P-1069 Steel galvanized	230
118	10	Bracket	4 hole bracket, Unistrut # P-1331	230
171	29'-2"	Channel	Single, 1 5/8" x 1 5/8", 12 gage Unistrut # P-1000, length as required	230
174	21'-8"	Conc. Insert	Unistrut # P-3000, length as required	230
292		Fan	2800 CFM, 480 volt, 3 ø, American Blower size 18	80
198	185	Conduit	1 1/4" Rigid steel galvanized	217
199	80	Conduit	1 1/2" Rigid steel galvanized	218
200	58	Conduit	2" Rigid steel galvanized	219

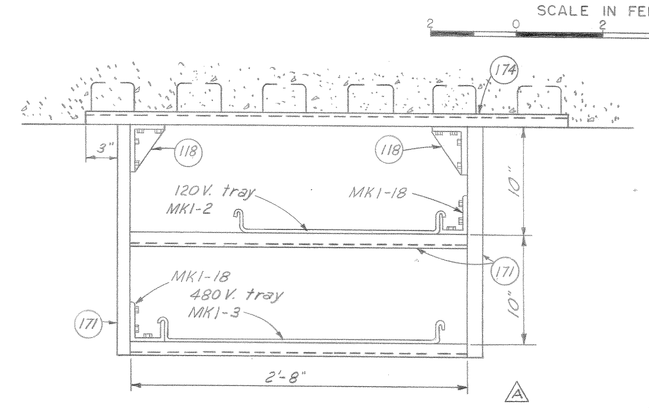

SUBSTATION CABLE TRAY SUPPORT

SCALE IN FEET

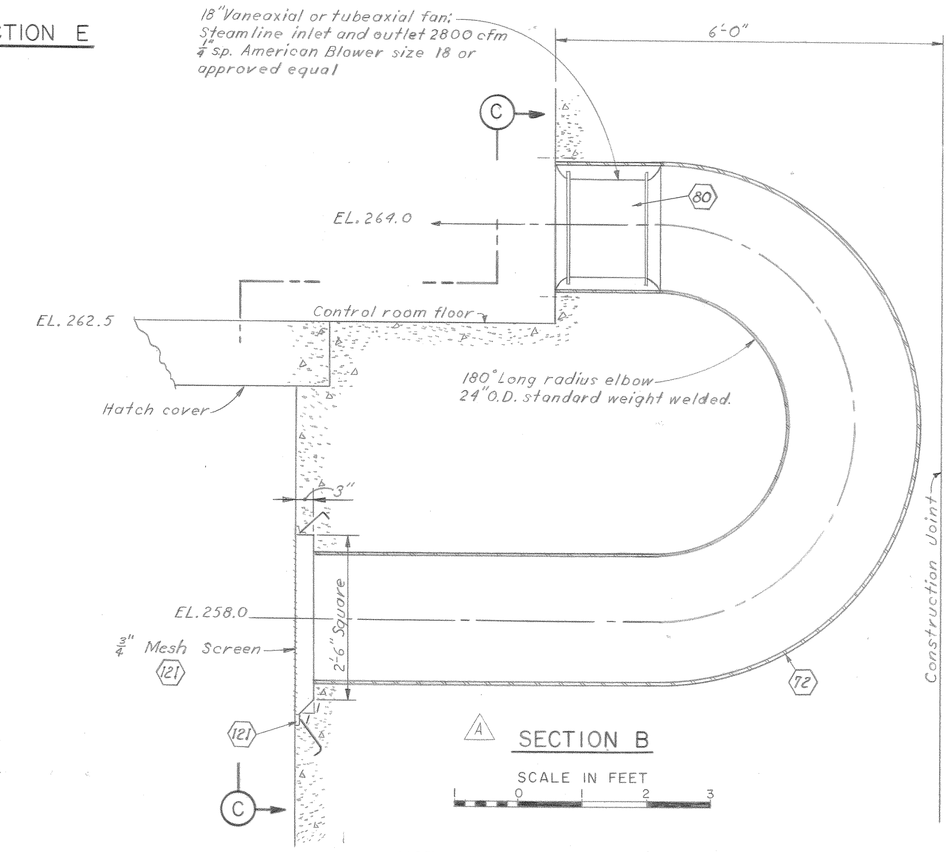

SECTION B

SCALE IN FEET

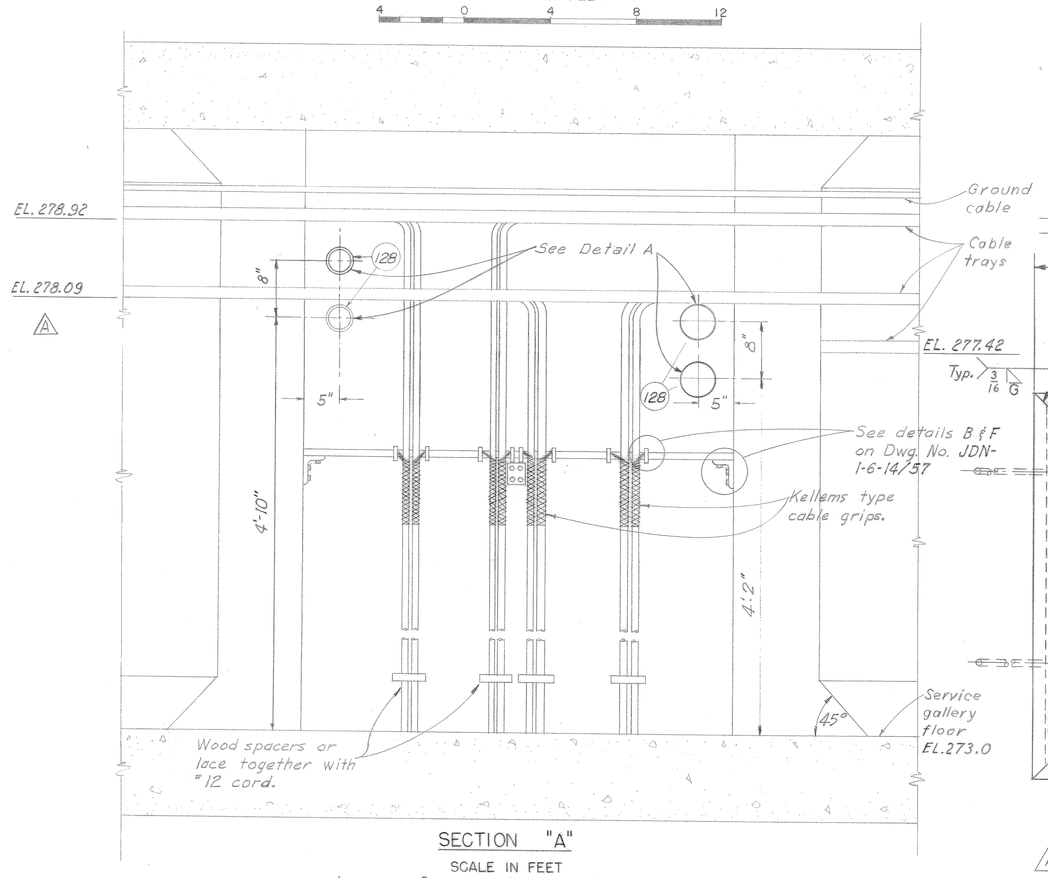

SECTION "A"

SCALE IN FEET

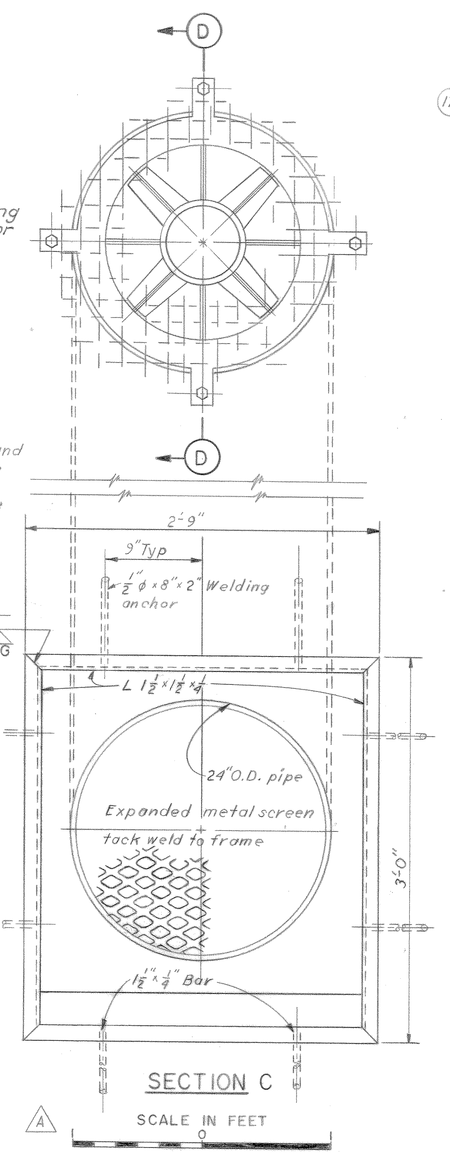

SECTION C

SCALE IN FEET

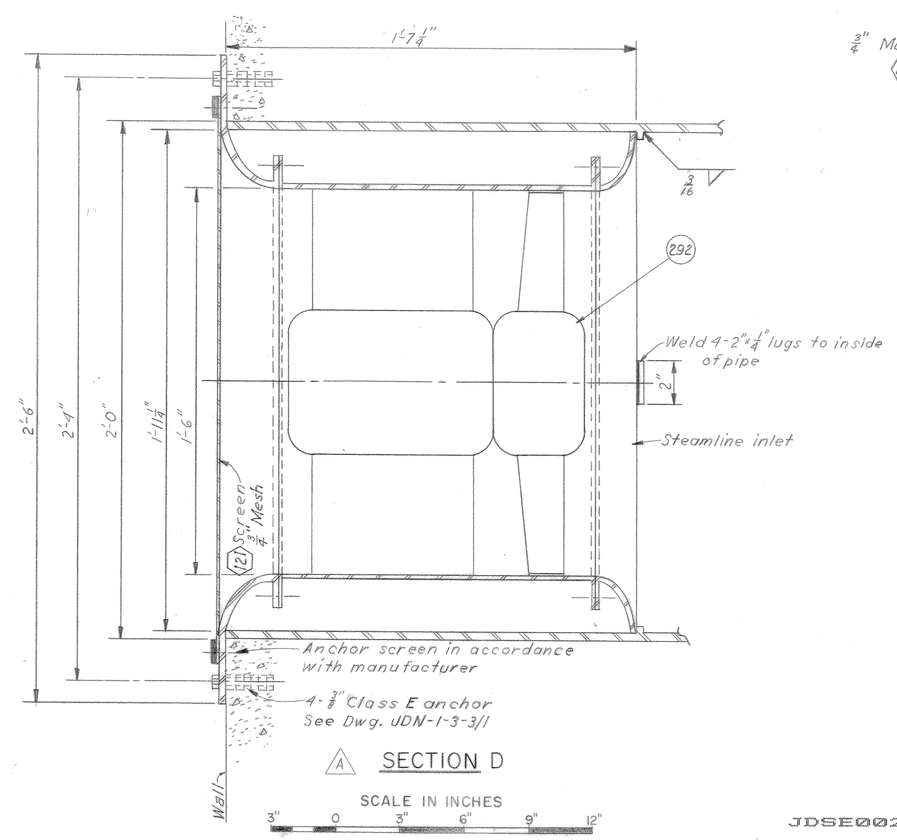

SECTION D

SCALE IN INCHES

NOTE:

1. Provide blockout as required for switchgear mounting channels.

JDSE0026.CIT

REVISION	DATE	DESCRIPTION	BY
D	8-1-75	Added Diesel Generator & electrical connection in substation	JMS
C	73 Sep 28	As constructed	
B	14 Mar. 61	Changed conduit, cable tray arrangement & material list	
A	13 Nov 59	Changed fan location and added fan details & bid items	

U. S. ARMY ENGINEER DISTRICT
WALLA WALLA, WASHINGTON

JOHN DAY LOCK AND DAM
COLUMBIA RIVER, OREGON AND WASHINGTON
NORTH NON-OVERFLOW DAM
POWER AND LIGHTING SYSTEM
DSQ1 SUBSTATION RM
WIRING DIAGRAM

DESIGNED: Murray
DRAWN: S. A. D.
CHECKED: Fornald
PREPARED: [signature]
CHIEF, ELECT DES. SECT.
SUBMITTED: Otto R. Lewis
CHIEF, DESIGN BRANCH
RECOMMENDED: E. A. Hampson
CHIEF, ENGINEERING DIVISION
APPROVED: Paul H. Lyndal
COLONEL, C. E. DISTRICT ENGINEER
DATE: 27 Aug 59
SCALE AS SHOWN
INV. NO. ENG. C-60-2
FILE NO.
SHEET 127
JDD-1-6-13/14

VOLUME 3 CONTRACT 60-156

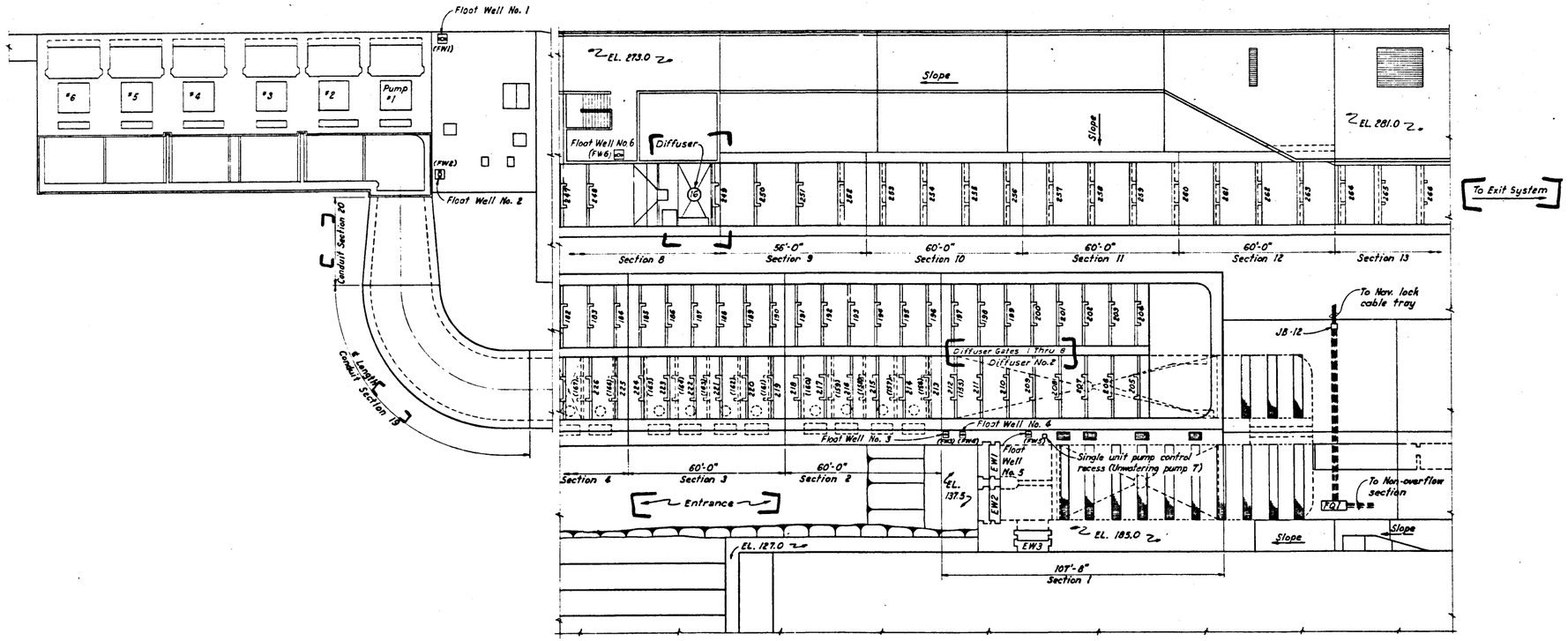

PLAN - NORTH SHORE FISH LADDER

SCALE IN FEET
20 0 20 40 60

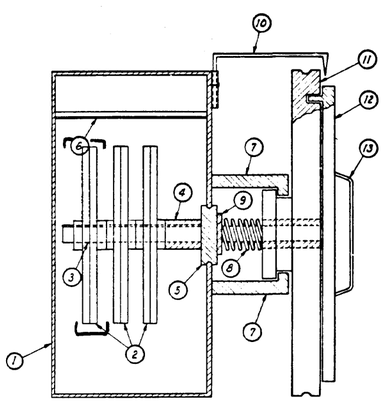

1. Watertight enclosure
2. Microswitch cams
3. Main shaft
4. Cam positioning bearing
5. Main shaft bearing & watertight seal
6. Microswitch mounting bar
7. Pulley holder arms
8. Spring
9. Spring retaining plate
10. Stationary pointer
11. Pulley (inner plate) graduated dial
12. Outer plate (with pointer)
13. Handle

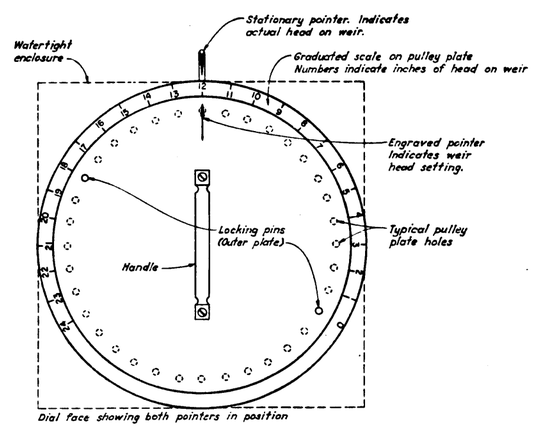

Dial face showing both pointers in position

Outer plate has two locking pins, one at 0 inches and one at 18 inches. Inner plate is graduated and has 36 holes in its surface. These holes are to be on 10° centers. One hole equals one inch of weir differential. Suggest holes be chamfered to permit easy setting.

DIAGRAMMATIC SKETCH OF FLOAT SWITCH
FOR FISH EXIT FLOATWELLS ONLY

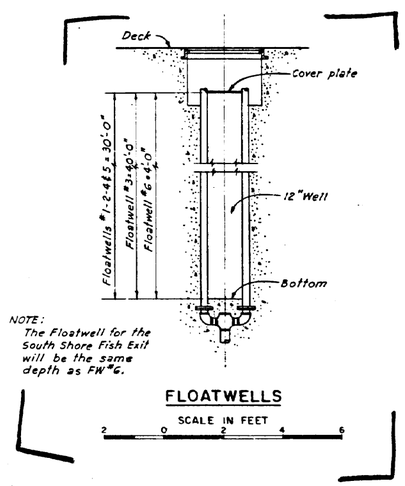

NOTE:
The Floatwell for the South Shore Fish Exit will be the same depth as FW #6.

FLOATWELLS

SCALE IN FEET
2 0 2 4 6

REVISION	DATE	DESCRIPTION	BY
A	21 Jun 60	Minor revisions	

U. S. ARMY ENGINEER DISTRICT
WALLA WALLA, WASHINGTON

DESIGNED: R. T. Beach
DRAWN:
CHECKED: J. Fernald
PREPARED: CHIEF, ELECT. DES. BRANCH
SUBMITTED: Otto R. Runn CHIEF, DESIGN BRANCH
RECOMMENDED: E. C. Trampe CHIEF, ENGINEERING DIVISION

JOHN DAY LOCK AND DAM
COLUMBIA RIVER, OREGON AND WASHINGTON
NORTH SHORE FISH LADDER
LOCATION PLAN AND FLOAT SWITCH DETAIL

APPROVED: Cecil C. Tompkins, DISTRICT ENGINEER
DATE: 15 MAY 60
SCALE AS SHOWN
INV. NO. ENG. C-60-58
SHEET 2
FILE NO. JDF-1-6-2/2

CONT 61-113

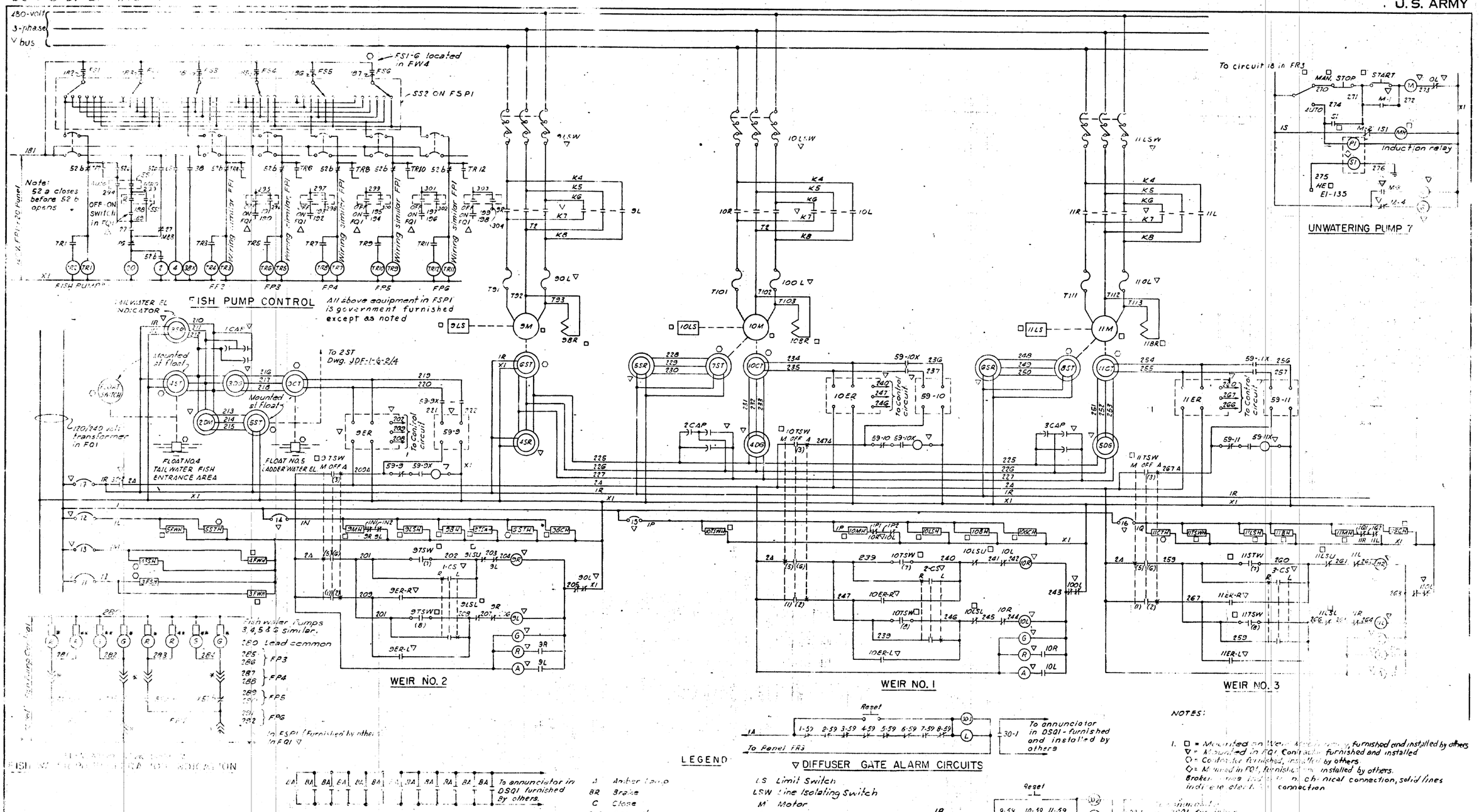

LEGEND

A	Amber Lamp	LS	Limit Switch
BR	Brake	LSW	Line Isolating Switch
C	Close	M	Motor
CAP	Capacitor	O	Open
CB	Circuit Breaker	OL	Overload
CT	Current Transformer	PB	Push Button
DG	Differential Overcurrent	PT	Transformer Primary
DM	Differential Monitor	R	Relay or Red Lamp
ER	Electrode Relay	RL	Relay
FS	Float Switch	ST	Transformer Secondary
FW	Float Well	S	Green Lamp
G	Green Lamp	SG	Gear Case
GC	Gear Case	SR	Switch or Recorder
H	Heater	T	Current Transmitter
HE	High Electrode	TD	Time Delay
I	Interrupter	TR	Time Relay
JB	Junction Box	TSW	Transfer Switch
L	Low	U	Upper
LE	Low Electrode		
2	Timing Relay	59	Over Voltage Relay
O	Valve Solenoid	27	Under Voltage Relay
38	Bearing Temp Relay	52	Air Circ. Brk. Type AM
86	Lock Out Relay	30	Annunciator Relay

NOTES:

1. □ = Mounted on Weir Area Equipment, furnished and installed by others
   ▽ = Mounted in FO1 Contractor furnished and installed
   ○ = Contractor furnished, installed by others
   ◇ = Mounted in FO1, furnished and installed by others.
   Broken lines indicate mechanical connection, solid lines indicate electrical connection

△ 21 Jun 60 Added alarm circuits & minor corrections

COIL CONTROL		FS SWITCH IN					
		ON	OFF			AUTO	OFF
1-0-11-0	1					X	
	2					X	
0-11-0-11	3					X	
	4					X	
0-11-0-11	5	X	X	X			
	6	X	X	X			
0-11-0-0-11-0	7			X			
	8	X					

Spring return to center position (Use GE 60 Type 5810 or approved equal)

NORTH SHORE FISH LADDER
POWER & CONTROL
ENTRANCE WEIRS
ELEMENTARY WIRING DIAGRAM

JDF-1-6-2

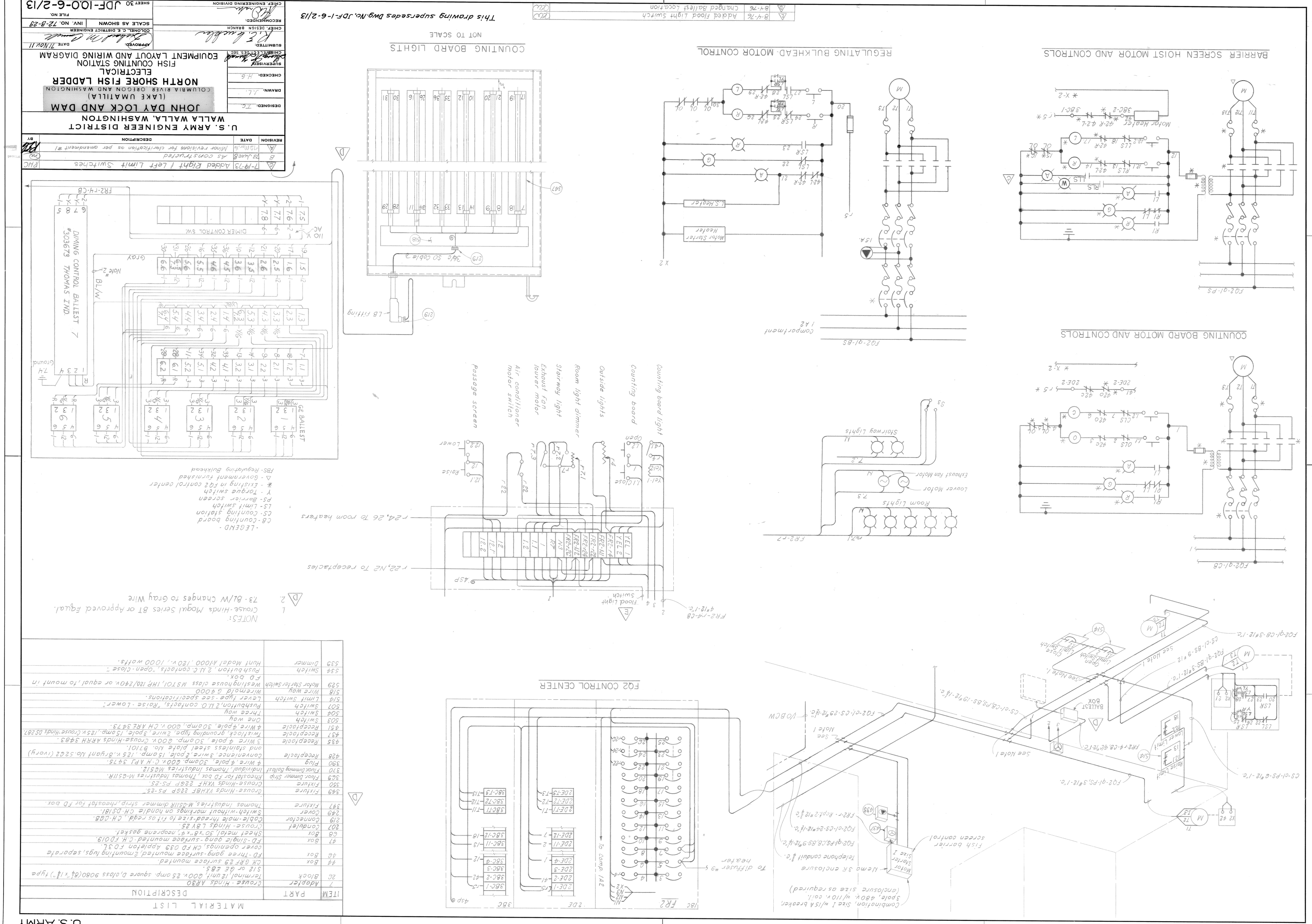

MATERIAL LIST

ITEM	PART	DESCRIPTION
1	Adapter	Crouse-Hinds AR80
26	Block	Terminal, 12 unit, 600v, 25 amp. square D, class 9080 (6¼"x1¼") type S12 or GE EB5.
44	Box	CH GRF29 surface mounted.
46	Box	FD-Three gang-surface mounted, 2 mounting lugs, separate cover openings, CH FD 039 Appleton FD3L.
47	Box	FD-Single gang-surface mounted. C.H. FD019.
63	Box	Steel metal 3x3x3"x4", neoprene gasket.
207	Conduit	Crouse-Hinds LB125.
219	Connector	Cable-male thread-size to fit as ready, CH-CG8.
249	Cover	Switch-without markings on handle CH-DS181.
397	Fixture	Thomas Industries, M-25IR dimmer strip, choosh for FD box.
349	Fixture	Crouse-Hinds VXHBF 22GP PS-25.
350	Fixture	Crouse-Hinds VXHF 22GP PS-25.
329	Fluor. Dimmer Strip	Hydroscoid for F02 box, Thomas Industries M-GSIIR.
370	Fluor Dimming Ballast	Individual, Thomas Industries M2512.
390	Plug	4 wire, 4 pole, 30amp, 600v C-H KPJ 3475.
428	Receptacle	Convenience, 3 wire, 2 pole, 15amp, 125v, Bryant Ua.5222 (ivory) and Stainless steel plate Ub. 5101.
435	Receptacle	3 wire 4 pole, 30amp, 600v Crouse-Hinds AR4B3.
437	Receptacle	Twistlock, grounding type, 2 wire, 3 pole, 15amp, 125v Crouse-Hinds DS287.
451	Receptacle	4 wire, 4 pole, 30amp, 600v, CH ARE3475.
503	Switch	One way
504	Switch	Three way
507	Switch	Pushbutton, 2 N.O. contacts, "Raise-Lower".
514	Limit Switch	Lever type-see specifications.
518	Wire way	Wiremold G4000.
529	Motor Starter-Switch	Westinghouse class M3T01, 1HP 120/240v. or equal, to mount in FD box.
534	Switch	Push button, 2 N.O. contacts, "Open-Close".
535	Dimmer	Hunt Model A1000, 120v., 1000 watts.

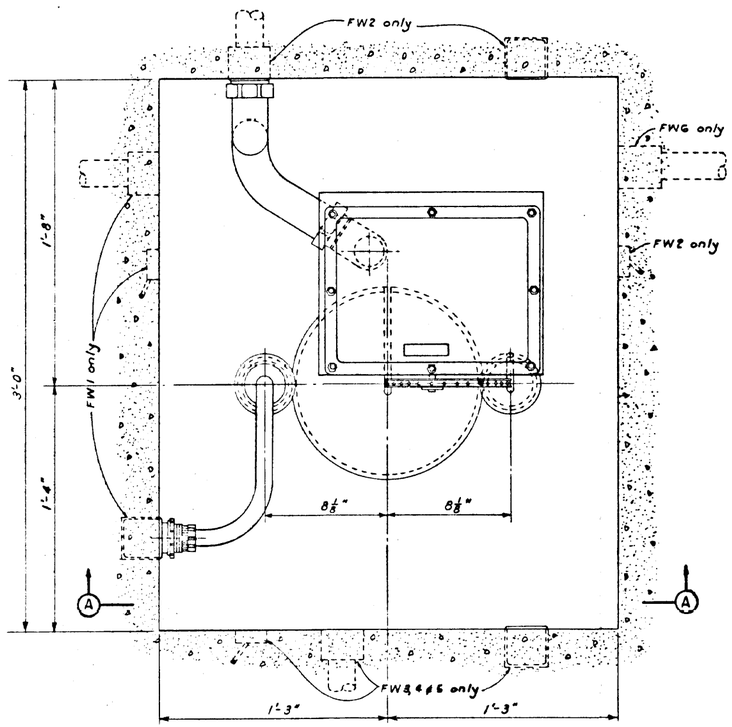

TYPICAL FLOATWELL INSTALLATION

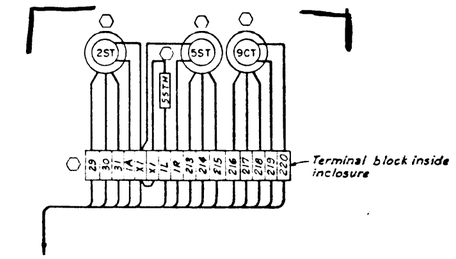

FLOATWELL NO. 5

CONNECTION DIAGRAM

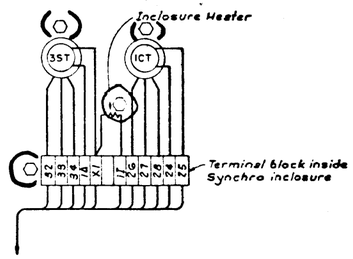

FLOATWELL NO. 3

CONNECTION DIAGRAM

* General connections for transmitters and/or control transformers and float switches. Floatwell No. 6 similar.

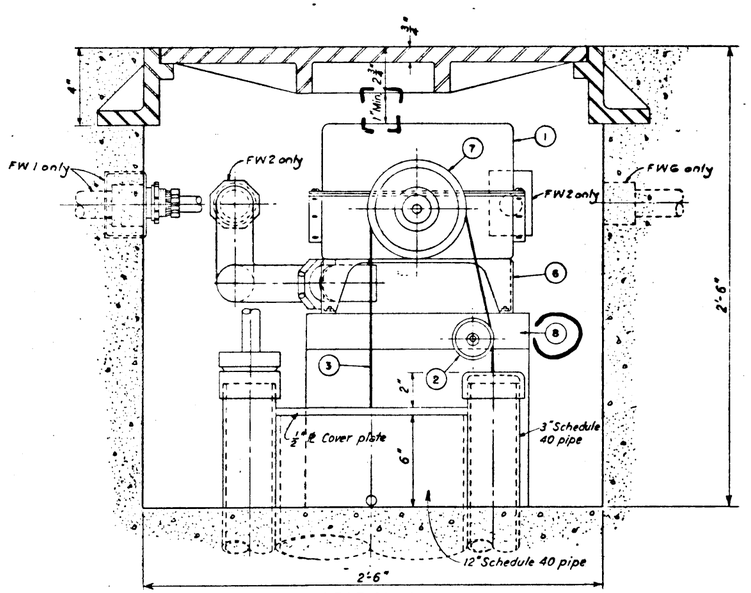

SECTION A

SCALE IN INCHES

3" 0 3" 6" 9" 12"

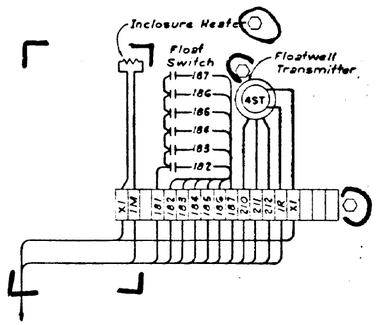

FLOATWELL NO. 4

CONNECTION DIAGRAM

Floatwells contain the following control equipment in addition to floats, chains, sprockets, etc.

Floatwell No. 1 1-Synchro Transmitter
Floatwell No. 2 1-Synchro Transmitter
Floatwell No. 3 1-Synchro Transmitter & 1-Control Transformer
Floatwell No. 4 1-Synchro Transmitter & 1-Float Switch
Floatwell No. 5 2-Synchro Transmitters & 1-Control Transformer
Floatwell No. 6 1-Float Switch
Floatwell, South Shore 1 Float Switch

MATERIAL LIST

ITEM	MATERIAL
1	Transmitter inclosure & transmitter [& float switches] equipment
2	Counterweight idler pulley
3	Tape or chain - stainless steel [See sheet 2]
4	Floats - stainless steel
5	Float counterweight
6	Base, transmitter inclosure
7	Transmitter drive pulley [See sheet 2]
8	Equipment stand

NOTES:

1. The transmitter base, item 6 shall be furnished under this contract and shall be fabricated of steel and hot dipped galvanized after fabrication.
2. A hole shall be drilled into the bottom of the transmitter inclosures and tapped for a 1/4" connector, except for Floatwell No. 4 which shall have a drilled and tapped hole for a 2" connector.
3. Only those items shown in the Material List, and specifically required by the specifications, come under this contract.
4. Quantities are as required by the specifications.
5. The cyclometer viewing window is at top of synchro inclosure.
6. Each transmitter & floatwell inclosure shall be furnished with a strip heater rated at 250 volts, a-c to be connected to (120) volts, a-c, 1-φ for the purpose of keeping moisture from condensing inside the synchros or housing. Heaters shall otherwise conform to para. 3.16 Heaters of the specifications.

REVISION	DATE	DESCRIPTION	BY
A	21 Jun 60	Added connections for FW5, minor corrections	

U. S. ARMY ENGINEER DISTRICT
WALLA WALLA, WASHINGTON

DESIGNED: C.D.W.
DRAWN: L.E.A.
CHECKED: G. Fernald
SUPERVISED: CHIEF, ELECT. DES. SECT.

JOHN DAY LOCK AND DAM
COLUMBIA RIVER, OREGON AND WASHINGTON
NORTH SHORE FISH LADDER
FLOAT TRANSMITTER
MOUNTING AND CONNECTION

SUBMITTED: CHIEF DESIGN BRANCH
RECOMMENDED: CHIEF, ENGINEERING DIVISION
APPROVED: COLONEL, C.E. DIST. ENGINEER
DATE 13 MAY 60

SCALE AS SHOWN
INV. NO. ENG. C-60-58
FILE NO.
SHEET 10
JDF-1-6-2/10

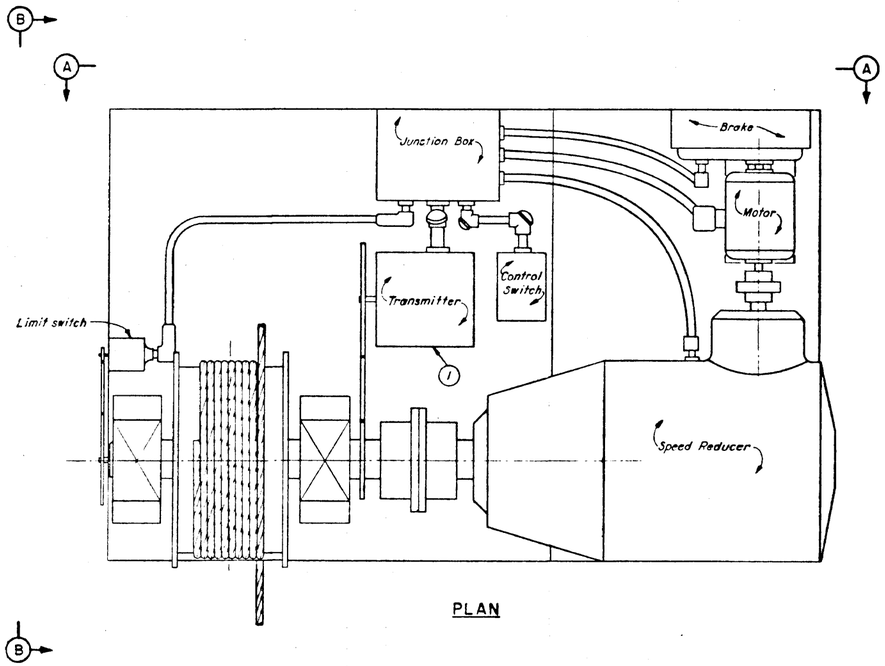

PLAN

MATERIAL LIST		
ITEM	TOTAL QUANTITY	DESCRIPTION
1	3	Synchro Assembly with Inclosure
2	3	Base, Inclosure
3	3	Sprocket, Drive
4	3	Sprocket, Driven
5	3	Chain, Sprocket

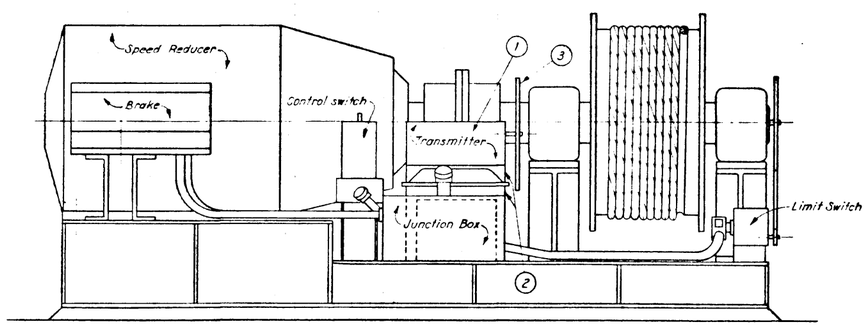

ELEVATION A

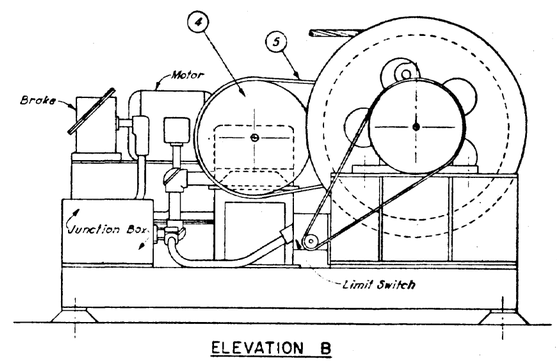

ELEVATION B

SCALE IN FEET
0

NOTES:

1. This drawing is for information only. Items shown furnished under this contract shall include synchro assembly complete with housing and necessary drive and driven sprockets and chain to be shipped separately for mounting by others. See Specs for details.
2. 1¼" Rigid steel conduit with all necessary hardware will be used for transmitter conductors. No. 19/25 conductors will be used for electrical connections. Terminal blocks shall be supplied in the housing for making proper conductor terminations.
3. A hole shall be drilled in the synchro housing and tapped for 1¼" conduit fittings. A boss shall be provided at the place where drilling occurs.
4. This drawing shows a typical machinery layout only. The actual design and arrangement is subject to the Machinery Contractor.

REVISION	DATE	DESCRIPTION	BY

U. S. ARMY ENGINEER DISTRICT
WALLA WALLA, WASHINGTON

DESIGNED: C.D.W.
DRAWN: Nelson
CHECKED: S. Fernald
SUPERVISED: [signature] CHIEF, ELECT. DES. SEC.

JOHN DAY LOCK AND DAM
COLUMBIA RIVER, OREGON AND WASHINGTON
NORTH SHORE FISH LADDER
ENTRANCE WEIR MACHINERY
SYNCHRO INSTALLATION

SUBMITTED: [signature] CHIEF, DESIGN BRANCH
RECOMMENDED: E. C. Tranyer CHIEF, ENGINEERING DIVISION
APPROVED: [signature] COLONEL, C.E. DISTRICT ENGINEER
DATE 13 MAY 60
SCALE AS SHOWN
INV. NO. ENG. [illegible]
FILE NO.
SHEET 11
JDF-1-6-2/11

CORPS OF ENGINEERS

U.S. ARMY

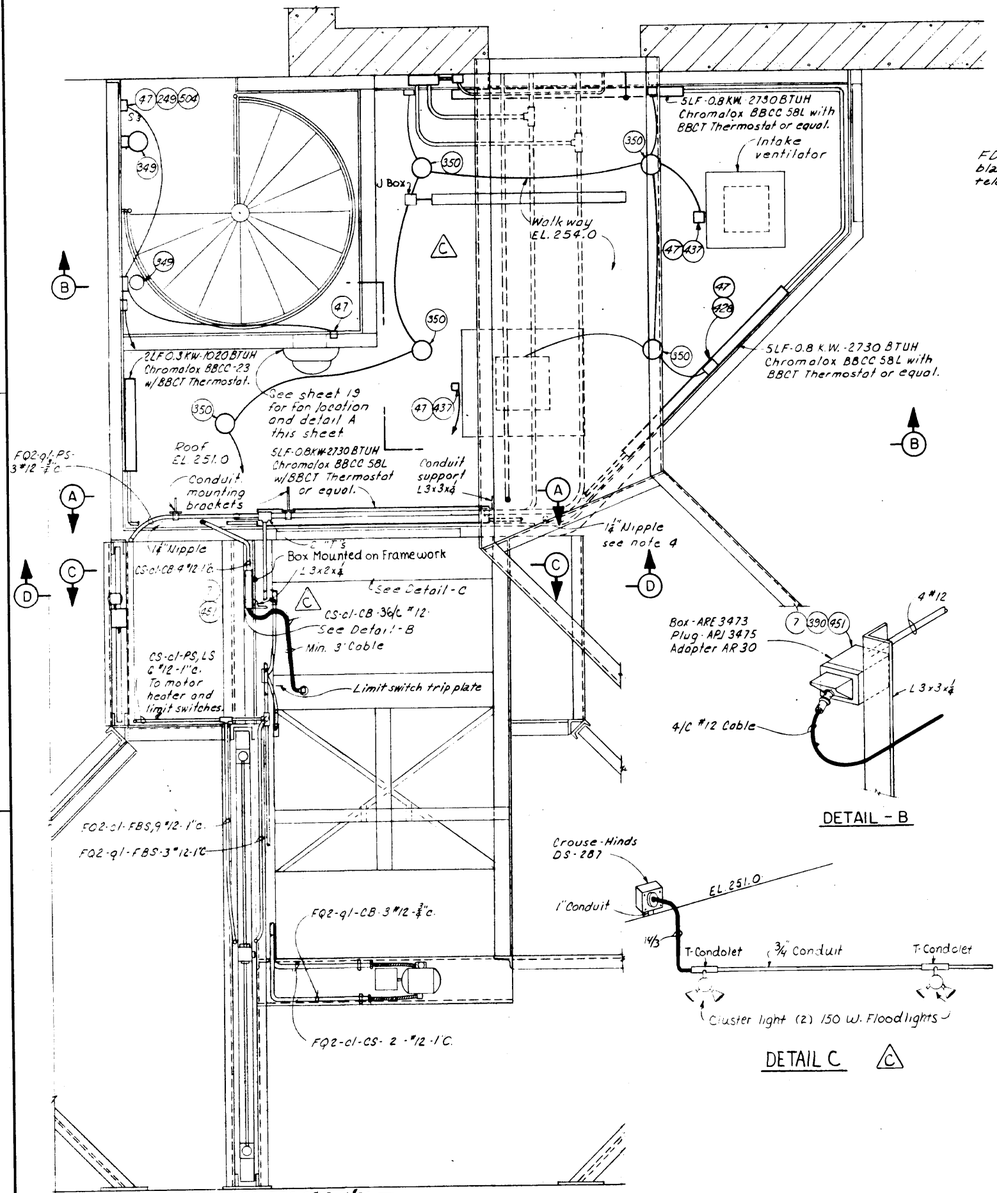

PLAN

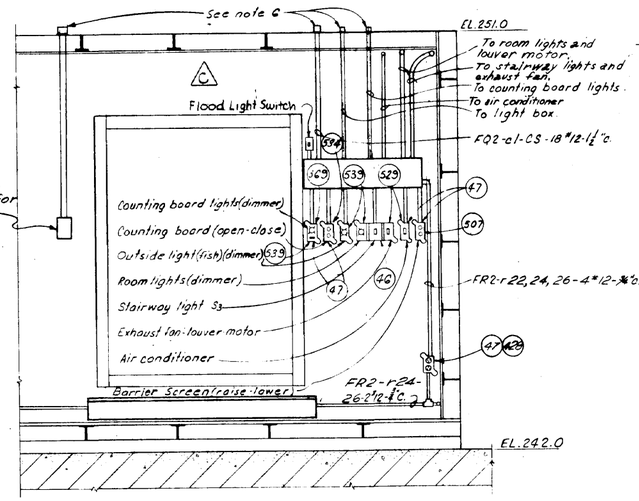

SECTION-A

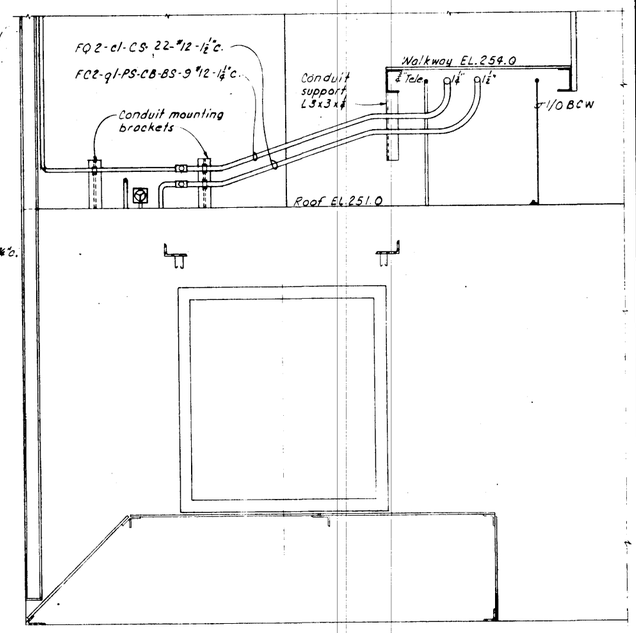

SECTION-D

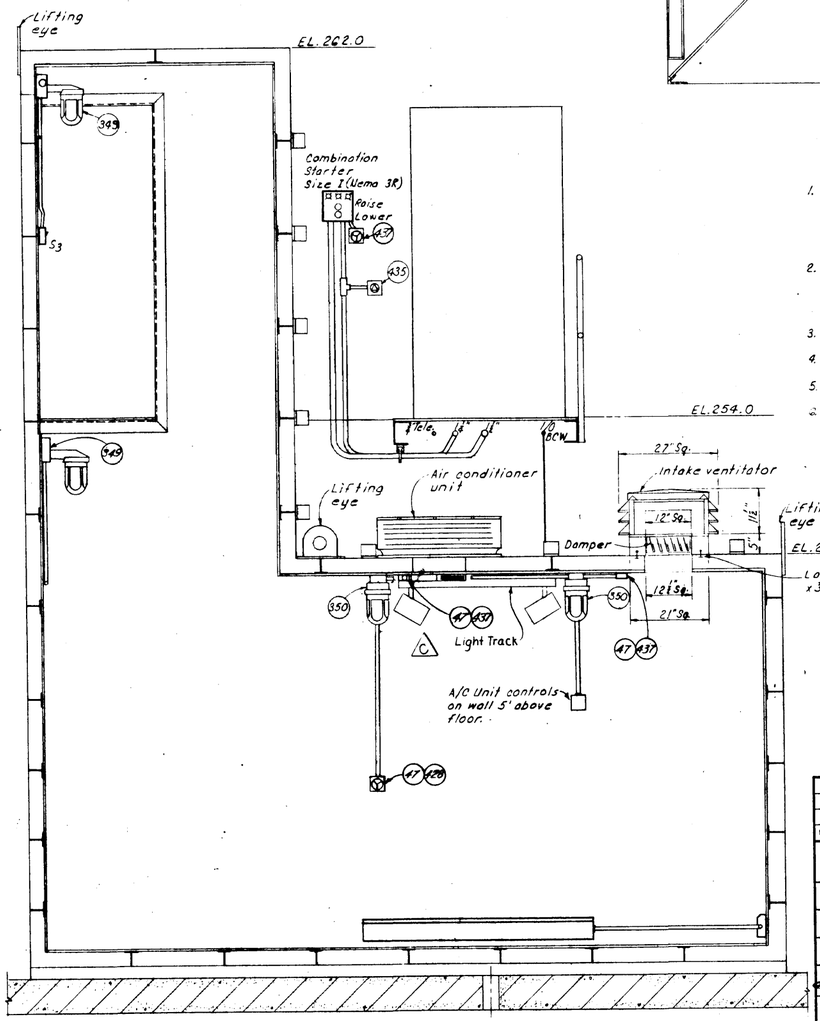

SECTION-B

NOTES:

1. Air conditioning unit 10000 B.T.U. 270 C.F.M. evaporator air flow, built in thermostat, hermatically sealed compressor suitable for roof mounting. "Motor Wheel Corporation, Duo-Therm Model S3210 or equal. Controls for air conditioner shall be placed in a position of easy access to fish counter.
2. Intake ventilator shall be Louverline Model LAR size 12 by Carnes Corporation or an approved equal. w/bird screen. The damper shall be Model 27 Motorized Back Draft Damper by Carnes or an approved equal.
3. Conduit and supports shall be located in the field.
4. Weld 1½"c. nipple thru roof of counting house (water tight).
5. Name plates to be in accordance with contract specification.
2. All conduits entering thru top of building must be sealed to prevent any leakage of water.

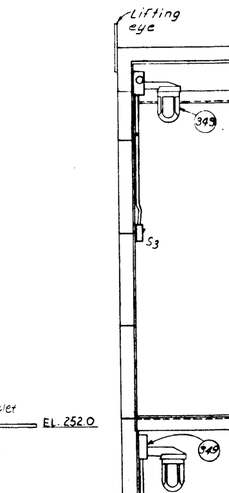

DETAIL - B

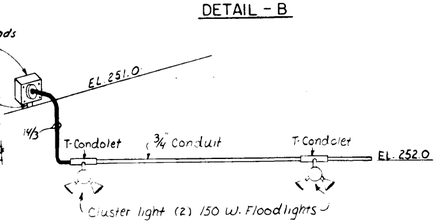

DETAIL C

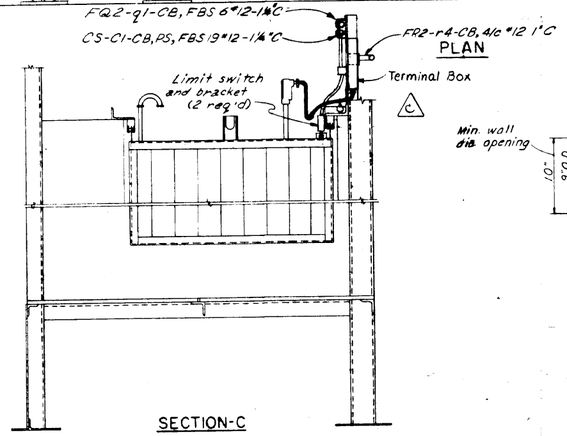

SECTION-C

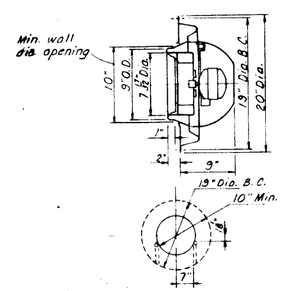

DETAIL-A

N.T.S.

Wall Ventilator Carnes: EWDA 07 Model 07B3 198 CFM ⅛"-S.P or an approved equal.

SCALE IN FEET 0 3

THIS PRINT REDUCED TO ONE-HALF SCALE

REVISION	DATE	DESCRIPTION	BY
C	76 Aug 3	Added Lighting Change	
B	73 June 8	As Constructed	
A	72 March	Minor revisions for clarification as per amendment #1	

U.S. ARMY ENGINEER DISTRICT
WALLA WALLA, WASHINGTON

JOHN DAY LOCK AND DAM
(LAKE UMATILLA)
COLUMBIA RIVER, OREGON AND WASHINGTON

NORTH SHORE FISH LADDER
ELECTRICAL
FISH COUNTING STATION
ELEMENTARY AND CONNECTION DIAGRAM

DESIGNED: T.C.
DRAWN: J.L.
CHECKED: H.G.
SUPERVISED: CHIEF, ELECT. DES. SEC.
SUBMITTED: R.E. Buckler CHIEF, DESIGN BRANCH
RECOMMENDED: CHIEF, ENGINEERING DIVISION
APPROVED: Richard W. Connell COL. RICHEL, C.E. DISTRICT ENGINEER
DATE 71 Nov 11
SCALE AS SHOWN
INV. NO. 72-B-23
FILE NO.
SHEET 29
JDF-1-6-2/12

CORPS OF ENGINEERS

U.S. A

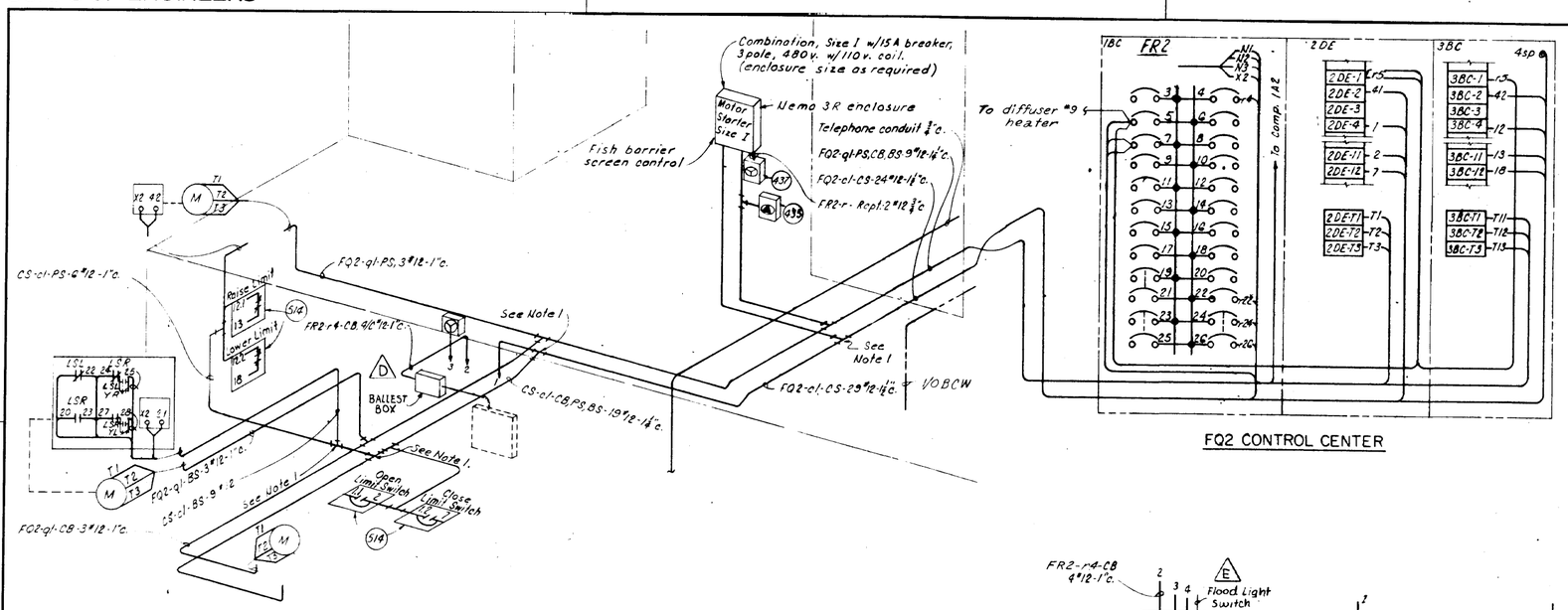

FQ2 CONTROL CENTER

MATERIAL LIST

ITEM	PART	DESCRIPTION
7	Adapter	Crouse-Hinds AR30
26	Block	Terminal, 12 unit, 600v. 25 amp. square D, class 9080 (8 1/4" x 1 1/4") type S12 or GE EB5.
44	Box	CH GRF 29 surface mounted.
46	Box	FD-Three gang-surface mounted, 2 mounting lugs, separate cover openings, CH FD 039 Appleton FD3L.
47	Box	FD-Single gang-surface mounted CH FD019.
68	Box	Sheet metal, 30"x8"x4", neoprene gasket.
207	Condulet	Crouse-Hinds LB125.
219	Connector	Cable-male thread-size to fit as req'd. CH-CGB.
249	Cover	Switch-without markings on handle CH DS181.
347	Fixture	Thomas Industries, M-251R dimmer strip, rheostat for FD box
349	Fixture	Crouse-Hinds VXHBF 22GP PS-25.
350	Fixture	Crouse-Hinds VXHF 22GP PS-25.
369	Fluor. Dimmer Strip	Rheostat for FD box, Thomas Industries M-251R.
370	Fluor. Dimming Ballast	Individual, Thomas Industries MQ512.
390	Plug	4 Wire, 4 pole, 30amp, 600v. C H APJ 3475.
428	Receptacle	Convenience, 3 wire, 2 pole 15 amp. 125 v. Bryant No. 5262 (ivory) and stainless steel plate No. 97101.
435	Receptacle	3 Wire 4 pole, 30 amp. 600 v. Crouse-Hinds ARRH 3483.
437	Receptacle	Twistlock, grounding type, 2 wire, 3 pole, 15 amp. 125 v. Crouse-Hinds DS 287.
451	Receptacle	4 Wire 4 pole, 30 amp., 600 v. CH ARE 3473.
503	Switch	One way
504	Switch	Three way
507	Switch	Pushbutton, 2 N.O. contacts, "Raise - Lower".
514	Limit Switch	Lever type - see specifications.
518	Wire way	Wiremold G 4000
529	Motor Starter Switch	Westinghouse class MST01, 1HP 120/240v. or equal, to mount in FD box.
534	Switch	Push button, 2 N.C. contacts, "Open - Close".
539	Dimmer	Hunt Model A1000 120 v., 1000 watts.

NOTES:

1. Crouse-Hinds Mogul Series BT or Approved Equal.
2. 7.3 - BL/W Changes to Gray Wire

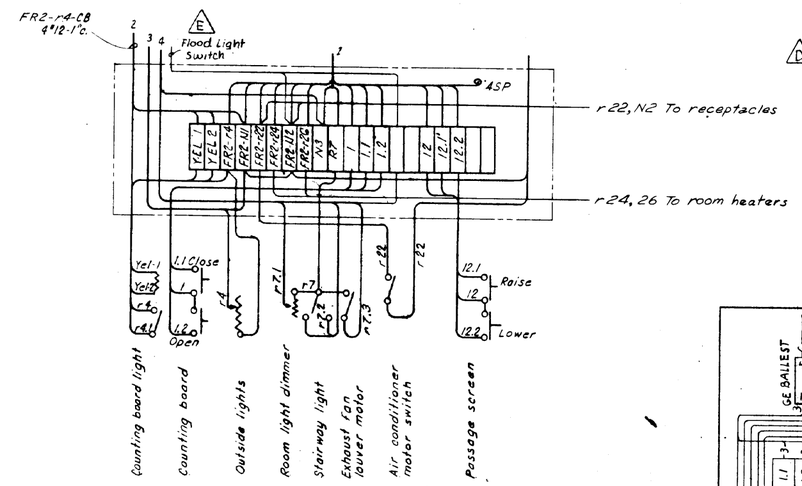

- LEGEND -
CB - Counting board
CS - Counting station
LS - Limit switch
PS - Barrier screen
Y - Torque switch
✱ - Existing in FQ2 control center
△ - Government furnished
FBS - Regulating Bulkhead

THIS PRINT REDUCED TO ONE-HALF SCALE

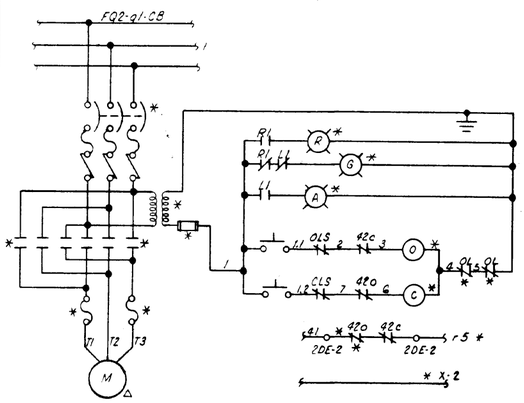

COUNTING BOARD MOTOR AND CONTROLS

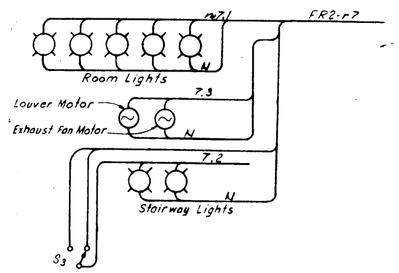

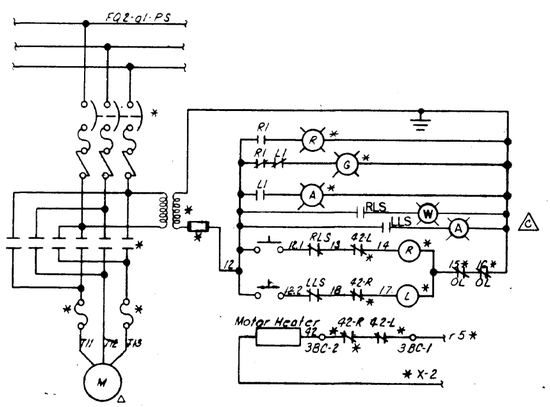

BARRIER SCREEN HOIST MOTOR AND CONTROLS

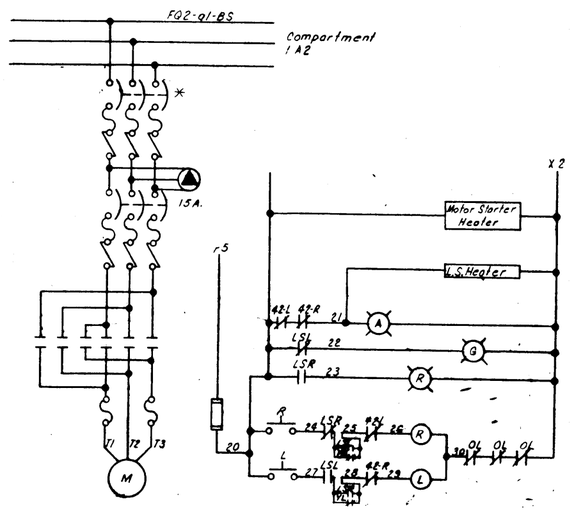

REGULATING BULKHEAD MOTOR CONTROL

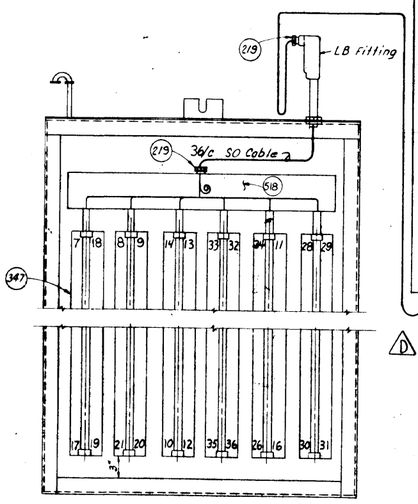

COUNTING BOARD LIGHTS

NOT TO SCALE

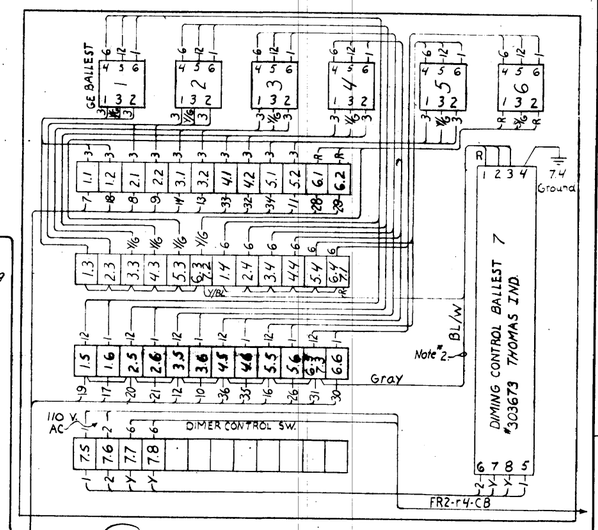

REVISION	DATE	DESCRIPTION	BY
C	7-19-73	Added Right & Left Limit Switches	RHC
B	23 June 8	As constructed	
A	12 Mar. 14	Minor revisions for clarification as per amendment #1	

U.S. ARMY ENGINEER DISTRICT
WALLA WALLA, WASHINGTON

DESIGNED: T.C.
DRAWN: J.L.
CHECKED: H.G.
SUPERVISED: CHIEF, ELECTRICAL SEC.
SUBMITTED: R.E. Buckler, CHIEF, DESIGN BRANCH
RECOMMENDED: CHIEF, ENGINEERING DIVISION

[redacted]

NORTH SHORE FISH LADDER
ELECTRICAL
FISH COUNTING STATION
EQUIPMENT LAYOUT AND WIRING DIAGRAM

APPROVED: Richard M. Connell, COLONEL, C.E. DISTRICT ENGINEER — DATE 11 NOV 11
SCALE AS SHOWN — INV. NO. 72-B-29
FILE NO.
SHEET 30 — JDF-100-6-2/13

REVISION	DATE	DESCRIPTION	BY
A	8-4-76	Added Flood Light Switch	
A	8-4-76	Changed Ballest Location	

This drawing supersedes Dwg. No. JDF-1-6-2/13

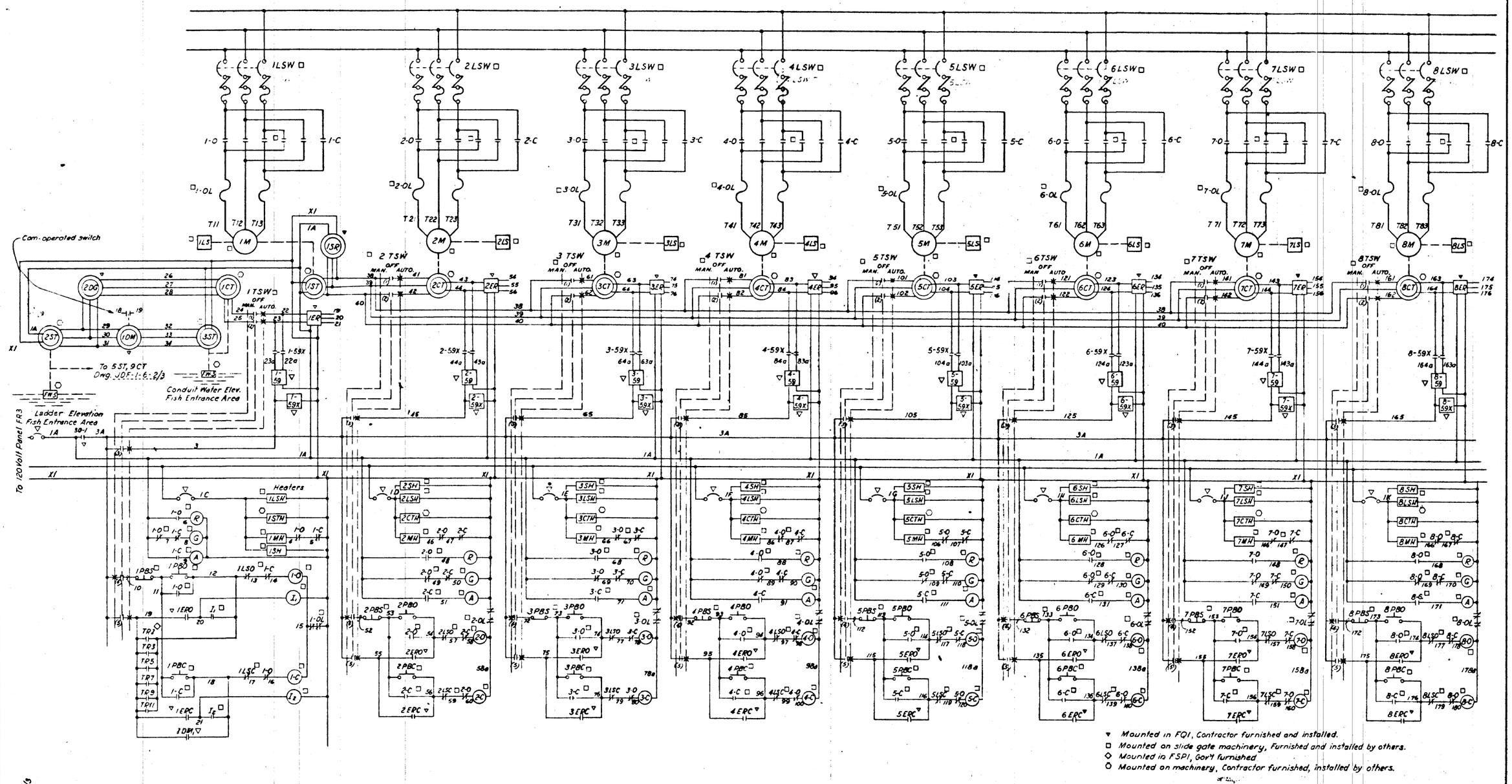

▼ Mounted in FQ1, Contractor furnished and installed.
□ Mounted on slide gate machinery, Furnished and installed by others.
◇ Mounted in FSP1, Gov't furnished
○ Mounted on machinery, Contractor furnished, installed by others.

NOTE:
1. See sheet 3, JDF-1-6-2/3 for legend.

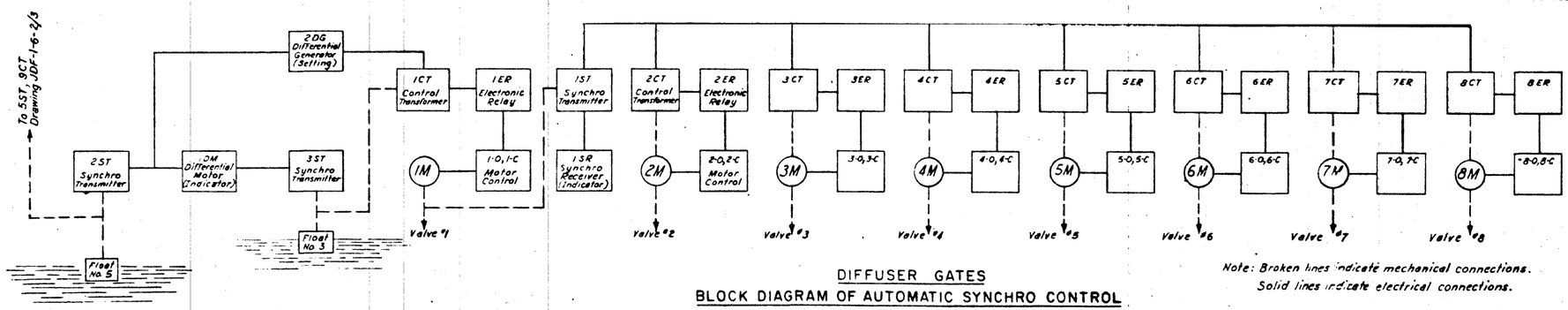

DIFFUSER GATES
BLOCK DIAGRAM OF AUTOMATIC SYNCHRO CONTROL
NOT TO SCALE

Note: Broken lines indicate mechanical connections.
Solid lines indicate electrical connections.

REVISION	DATE	DESCRIPTION	BY
A	2 Jun 60	Minor corrections	

U. S. ARMY ENGINEER DISTRICT
WALLA WALLA, WASHINGTON

DESIGNED R. Erb
DRAWN T. R. Jr.
CHECKED G. Fernald
PREPARED [signature] CHIEF, ELECT. DES. SECT.

JOHN DAY LOCK AND DAM
COLUMBIA RIVER, OREGON AND WASHINGTON
NORTH SHORE FISH LADDER
POWER & CONTROL
ATTRACTION WATER SYSTEM
ELEMENTARY WIRING DIAGRAM

SUBMITTED [signature] CHIEF, DESIGN BRANCH
APPROVED [signature] COMMISSIONER, DISTRICT ENGINEER
DATE 13 MAY 60
RECOMMENDED E. C. Franzen CHIEF, ENGINEERING DIVISION
SCALE AS SHOWN
INV. NO. ENG. C-60-58
SHEET 4
FILE NO. JDF-1-6-2/4

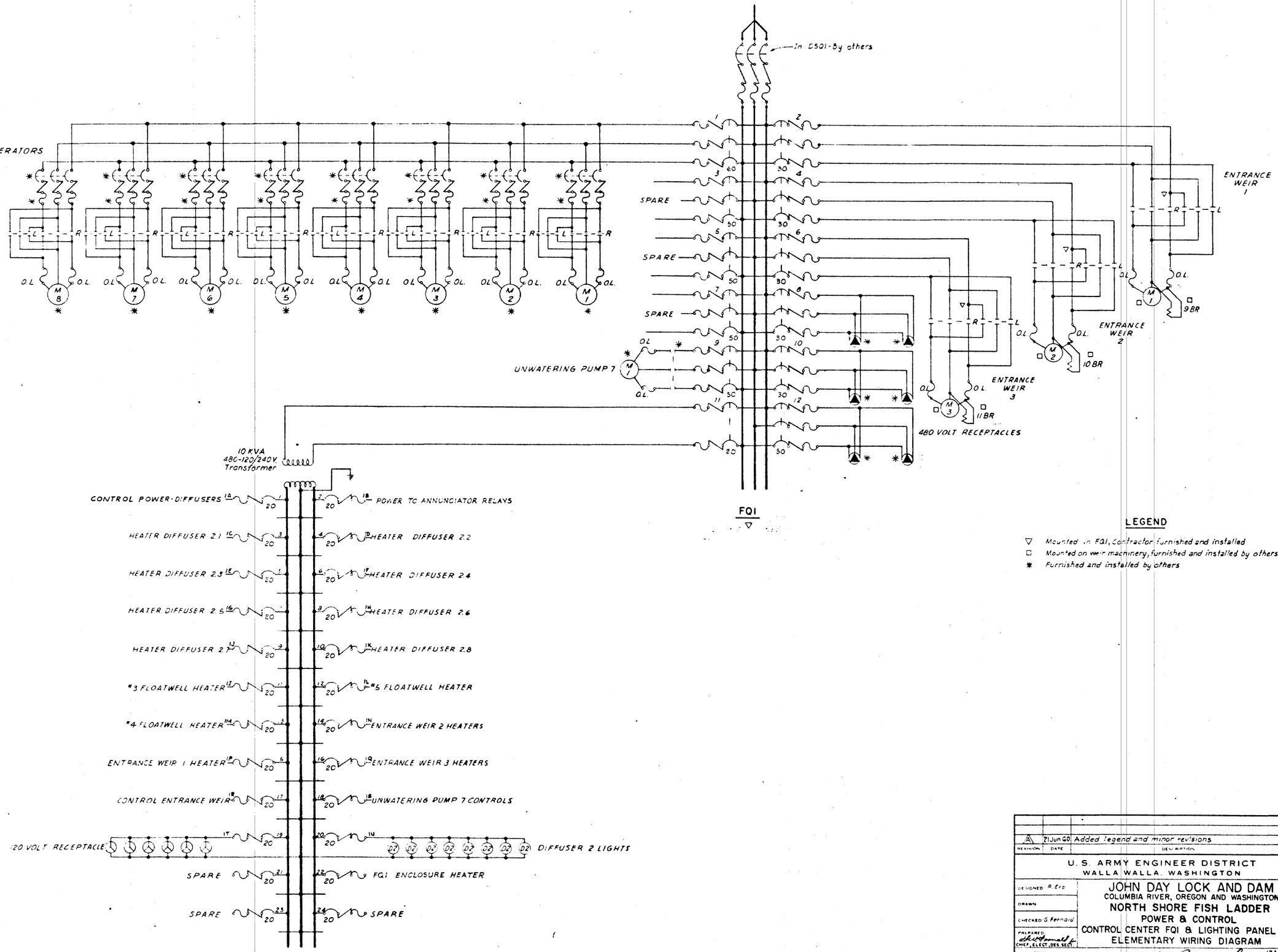

LEGEND

- ▽ Mounted in FQ1, Contractor furnished and installed
- □ Mounted on weir machinery, furnished and installed by others
- ✱ Furnished and installed by others

REVISION	DATE	DESCRIPTION	BY
A	21 Jun 60	Added legend and minor revisions	

U. S. ARMY ENGINEER DISTRICT
WALLA WALLA, WASHINGTON

DESIGNED R. Erb
DRAWN
CHECKED G. Ferraioli
PREPARED CHIEF, ELECT. DES. SECT.

JOHN DAY LOCK AND DAM
COLUMBIA RIVER, OREGON AND WASHINGTON
NORTH SHORE FISH LADDER
POWER & CONTROL
CONTROL CENTER FQ1 & LIGHTING PANEL FR3
ELEMENTARY WIRING DIAGRAM

SUBMITTED Otto R. Lunn CHIEF, DESIGN BRANCH
RECOMMENDED E. C. Frampe CHIEF, ENGINEERING DIVISION
APPROVED Paul H. Symbol DATE 13 MAY 60
SCALE AS SHOWN
INV. NO. ENG C-60-58
SHEET 5
FILE NO. JDF-1-6-2/5

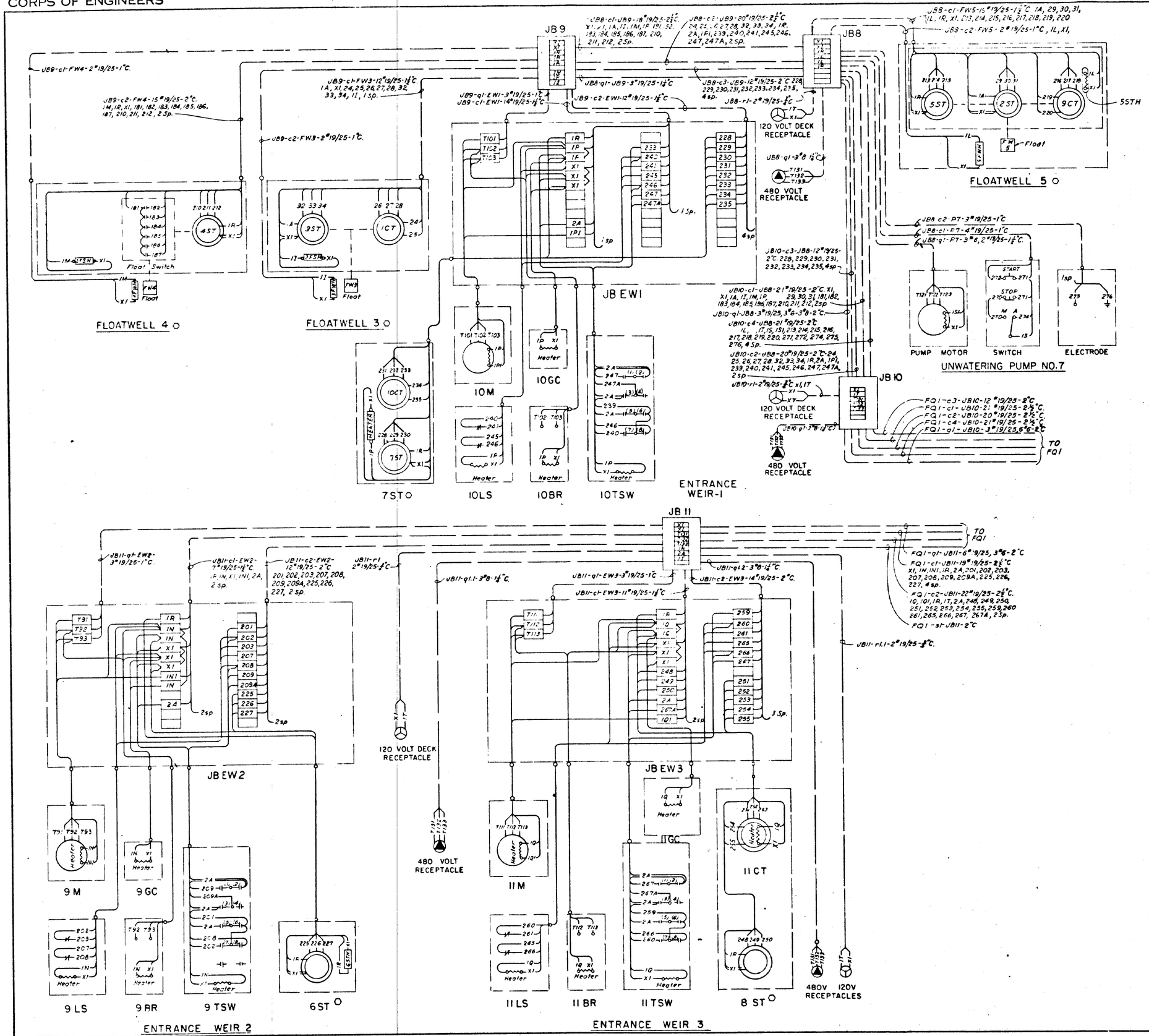

NOTES:

1. For legend see JDF-1-6-2/3

REVISION	DATE	DESCRIPTION	BY
A	21 Jun 60	Minor revisions	

U.S. ARMY ENGINEER DISTRICT
WALLA WALLA, WASHINGTON

JOHN DAY LOCK AND DAM
COLUMBIA RIVER, OREGON AND WASHINGTON
NORTH SHORE FISH LADDER
POWER & CONTROL
ENTRANCE WEIRS
CONNECTION DIAGRAM

DESIGNED R. Etz
DRAWN
CHECKED G. Fernald
PREPARED
CHIEF, ELECT. DES. SECT.
SUBMITTED Etto R. Kuum
CHIEF, DESIGN BRANCH
RECOMMENDED E. C. Trangon
CHIEF, ENGINEERING DIVISION
APPROVED
DATE 13 MAY 60
SCALE AS SHOWN
INV. NO. ENG C-60-56
FILE NO.
SHEET 6
JDF-1-6-2/6

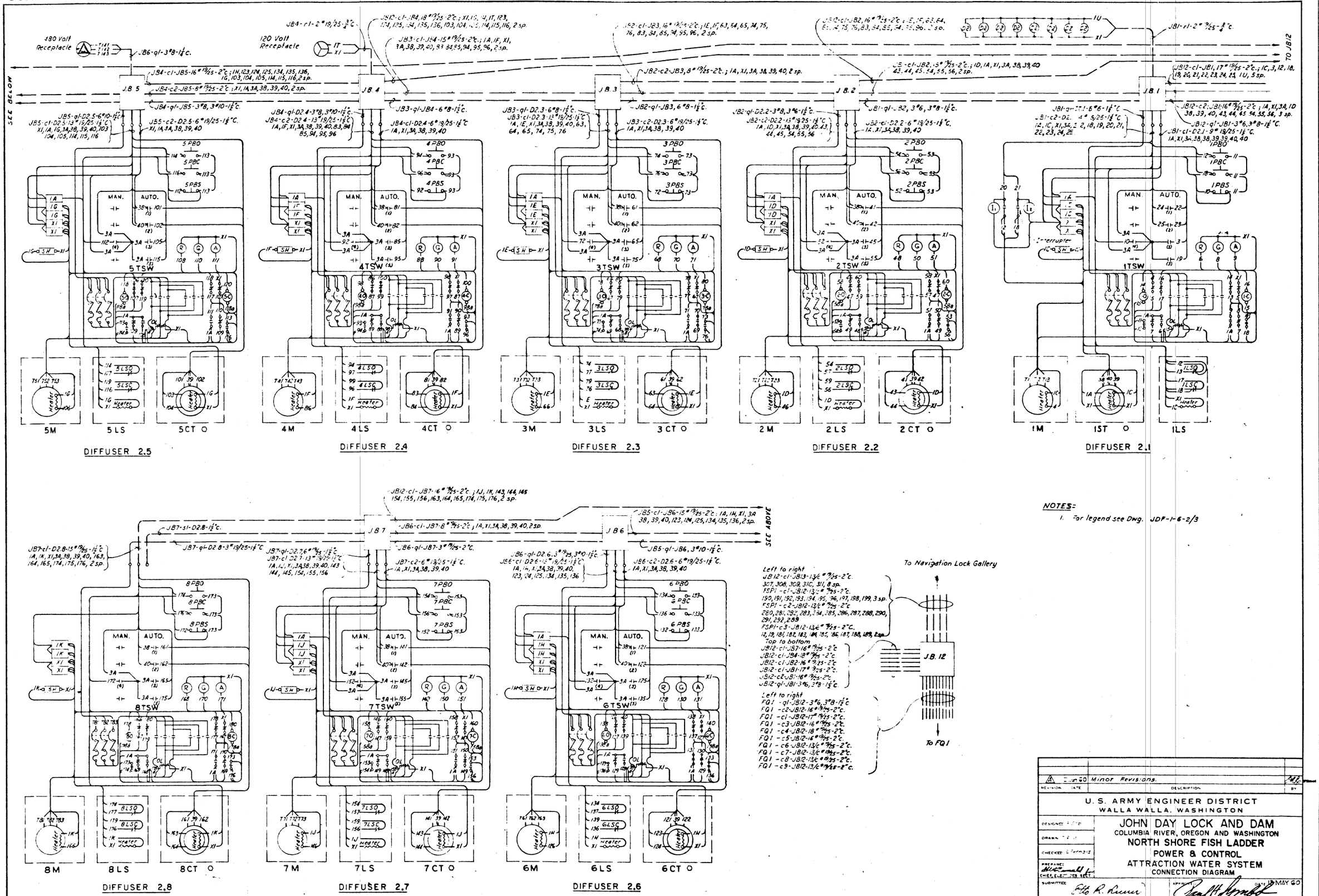

NOTES:

1. For legend see Dwg. JDF-1-6-2/3

REVISION	DATE	DESCRIPTION	BY
1	5-MAY-60	Minor Revisions.	

U. S. ARMY ENGINEER DISTRICT
WALLA WALLA, WASHINGTON

JOHN DAY LOCK AND DAM
COLUMBIA RIVER, OREGON AND WASHINGTON
NORTH SHORE FISH LADDER
POWER & CONTROL
ATTRACTION WATER SYSTEM
CONNECTION DIAGRAM

DESIGNED
DRAWN
CHECKED
PREPARED
CHIEF, ELECTRICAL SECT.
SUBMITTED
CHIEF, DESIGN BRANCH
RECOMMENDED
CHIEF, ENGINEERING DIVISION
APPROVED — DATE 19 MAY 60
CHIEF, ENGINEER
SCALE AS SHOWN
INV. NO. ENG C-60-58
SHEET 7
FILE NO. JDF-1-6-2/7

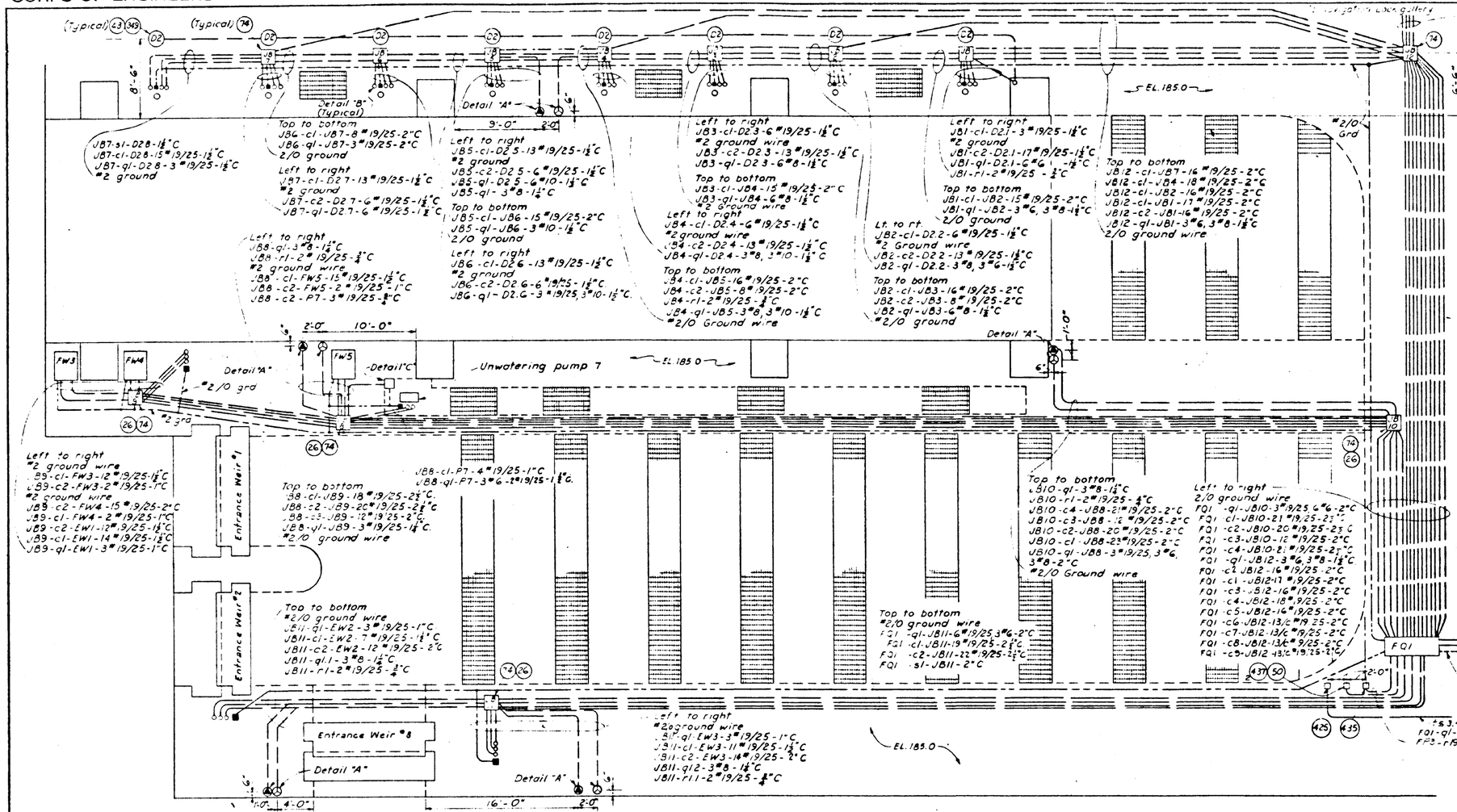

PLAN

SCALE IN FEET

ITEM	QUAN	PART	DESCRIPTION	BID ITEM
26	4	Block	Terminal, 12 unit, 600 volt, 25 amp, Square D type S12, Cuss 3080, GE type EB-5	232
61	13	Box	FD	228
74	12	Box	Cast, flush mounted, 18" x 18" x 10", Hope 7051, CZ-YR 181810	225
196	410 L.F.	Conduit	¾", see specs	215
197	75 L.F.	"	1", " "	216
198	160 L.F.	"	1¼", " "	217
199	480 L.F.	"	1½", " "	218
200	2700 L.F.	"	2", " "	219
225	15	Connector	Ground, size as required, Burndy GFG	227
271	1	Holder	One electrode B/W Controller Corp type E1	79
274	2	Electrodes	Brass, B/W Controller Corp type E-15	79
278		Wire	Electrode, " " " type SC	79
349	8	Lamp	Detail "D2" Dwg. JDN-1-G-14/23	228
379	1	Plug	3 wire, 3 pole, 60 amp 600 volt C-H APJ 6375	79
403	10	Pedestal	1', 3" High, C-H Ped 33	233
425	1	Receptacle	Sound power, see specs.	237
435	1	"	3 wire, 4 pole, 30 amp 600 volt C-H AEQ 1348	233
437	10	"	Twistlock, 2 wire, 3 pole, 15 amp, 125 volt, C-H DS-220	228
443	5	"	3 wire 4 pole, 30 amp, 600 volt, C-H AR 348	233
444	1	"	3 wire, 3 pole, 60 amp. 600 volt, C-H AR 637	79
514	1	Switch for Pump #7	Motor, start-stop pushbutton, MAN-OFF-AUTO selector switch, heavy duty, NEMA 4, H 4220 SSF, Aller Bradley Bulletin 800	79
310	3	Heater	Cartridge, red brass sheath, Industrial Engr. See Detail "E", Equipment Co. No. 20-164 Dwg. JDN-1-G-14/33	174
376	3	Plug	2 wire, 3 pole, 15 amp, 125 volt, CH-WP 728 See Data 14 Dwg. JDN-1-G-14/88	174
50	1	Box	C-H, FD02	196

This drawing included for information only to show locations of equipment.

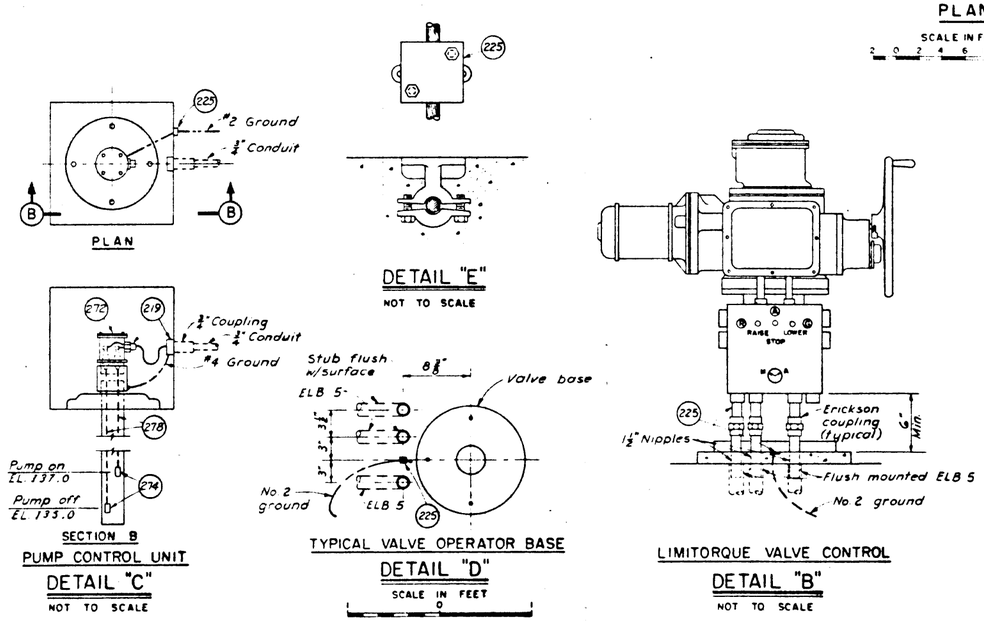

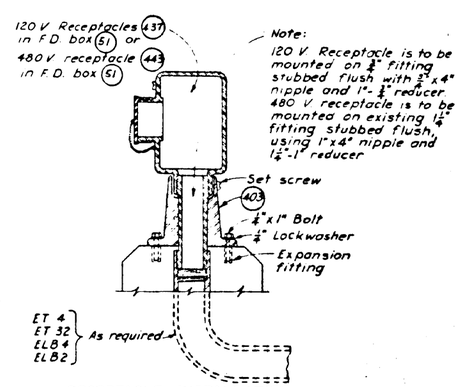

REVISION	DATE	DESCRIPTION	BY
A	21 Jun 60	Minor revision	

U.S. ARMY ENGINEER DISTRICT
WALLA WALLA, WASHINGTON

DESIGNED P.E.C.
DRAWN R.C.C.
CHECKED G. Ferrari
PREPARED Hughes Smith
CHIEF, ELECT. DES. SECT.

JOHN DAY LOCK AND DAM
COLUMBIA RIVER, OREGON AND WASHINGTON
NORTH SHORE FISH LADDER
POWER & CONTROL
FISHWAY ENTRANCE DECK - EL. 185
WIRING DIAGRAM

SUBMITTED Ellis R. Crum
CHIEF, DESIGN BRANCH
RECOMMENDED E. C. Franzen
CHIEF, ENGINEERING DIVISION
APPROVED Paul H. Dymes
CHIEF
15 MAY 60
SCALE AS SHOWN
INV. NO. ENG C 30-56
SHEET 8
FILE NO. JDF-1-6-2/8

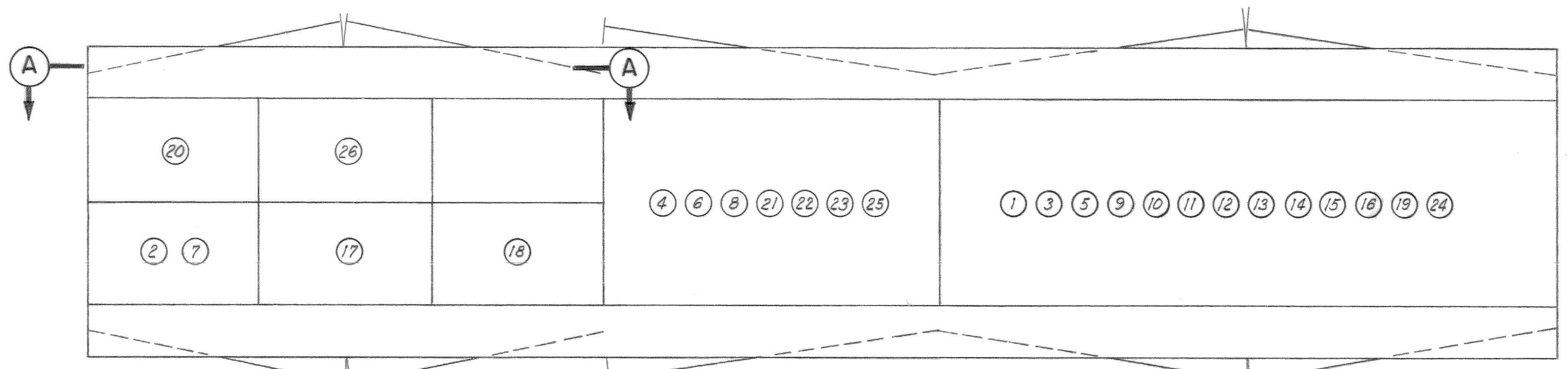

FQ-1 TOP VIEW
SHOWING DOORS & CONDUIT STUB-UPS

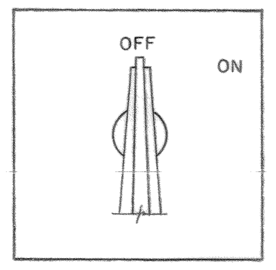

SW. FACE MARKINGS
ITEMS 16, 16a, 16b
16c, 16d, 16e

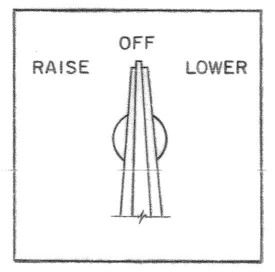

SW. FACE MARKINGS
ITEMS 15, 15a, 15b

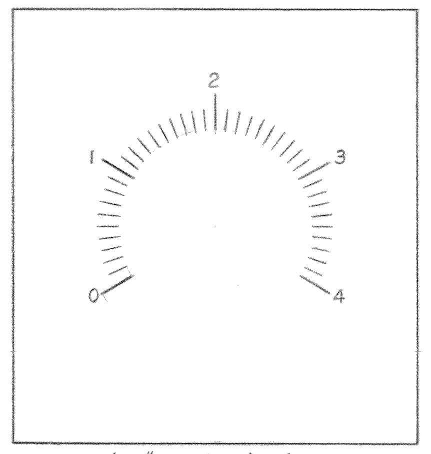

See Note #1 this sheet

DETAIL "A"
DIAL FACE MARKINGS FOR ITEMS 13a, 14d.
1 REV. SYNCHRO. ROTOR=6.0 FT. ON DIAL.

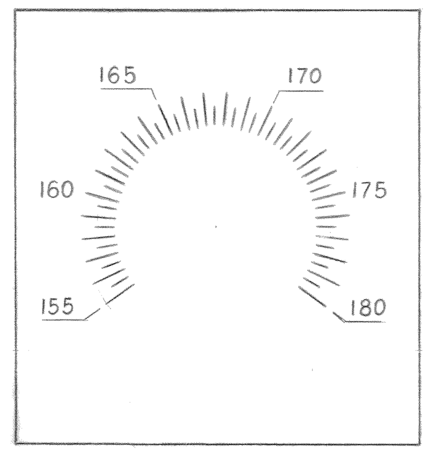

DETAIL "B"
DIAL FACE MARKINGS FOR ITEMS 12d, 12e
1 REV. SYNCHRO. ROTOR=10 FT. ON DIAL

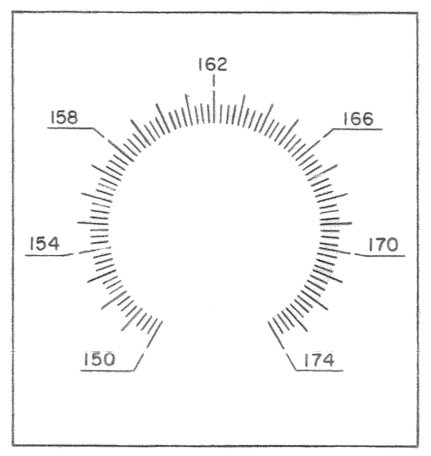

DETAIL "C"
DIAL FACE MARKINGS FOR ITEMS 12, 12a, 12b
1 REV. SYNCHRO ROTOR=10 FT. ON DIAL

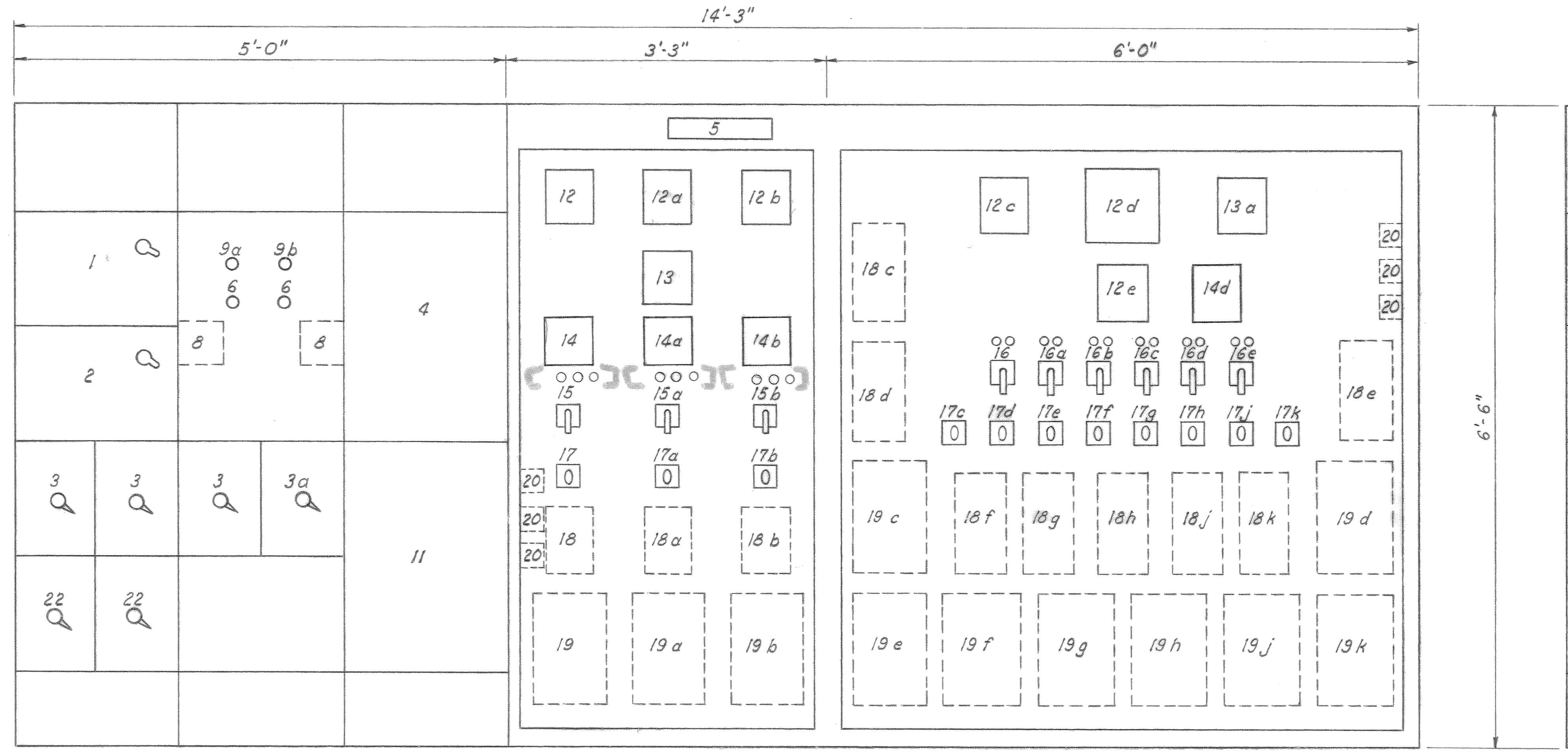

FQ-1 FRONT VIEW
WITH FRONT DOORS REMOVED

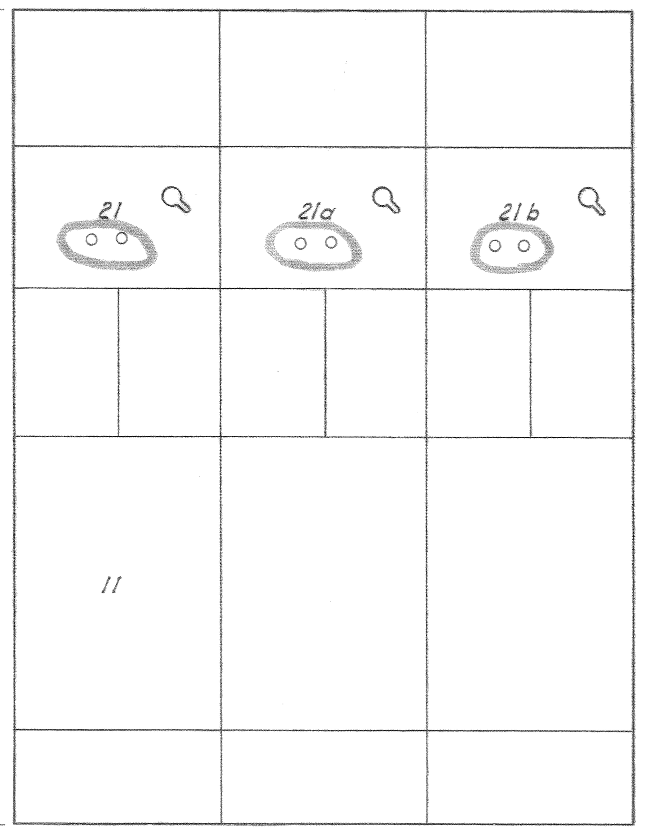

SECTION A

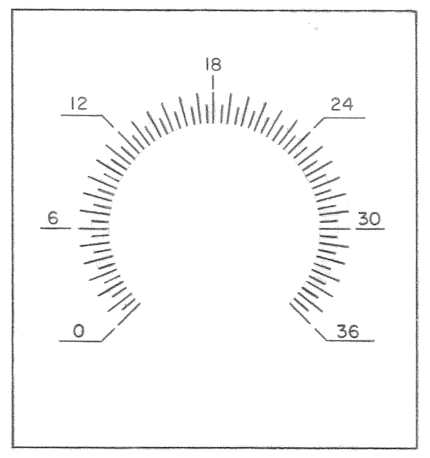

DETAIL "D"
DIAL FACE MARKINGS FOR ITEM 12c
1 REV. SYNCHRO ROTOR=12 IN. ON DIAL

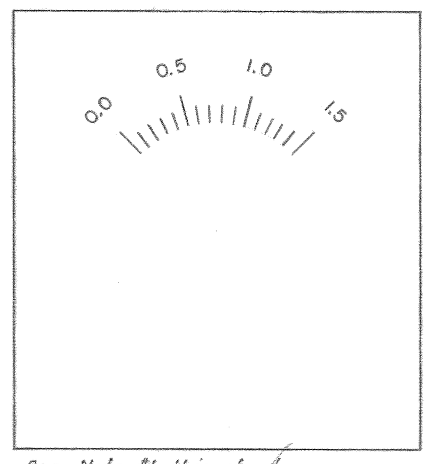

See Note #1 this sheet

DETAIL "E"
DIAL FACE MARKINGS FOR ITEMS
13, 14,

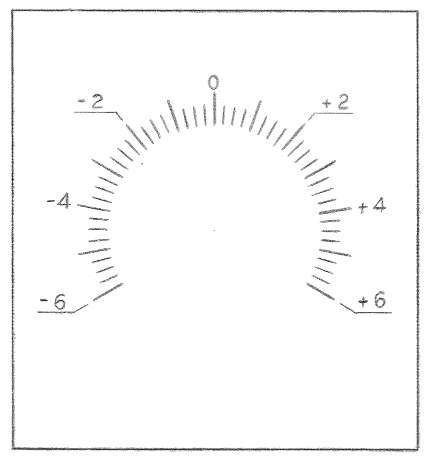

DETAIL "F"
DIAL FACE MARKINGS FOR ITEM 14a, 14b
1 REV. SYNCHRO ROTOR=12 IN. ON DIAL

DESIGN INFORMATION CONCERNING GRADUATED DIAL FACES

ITEM NO.	DIAL SIZE	GENERAL INFORMATION PRESENTED	DIAL DESIGN CRITERIA	DETAIL NO.
12d	12"	Tailwater indicator, fishway entrance (3SR)	EL. 155-180 ft., ½ ft. grads., 10° per ft.	"B"
12e	6"	Elevation pumphouse tailwater	EL. 155-180 ft., ½ ft. grads., 10° per ft.	"B"
12c	6"	Diffuser gate settings (1SR)	0-36 in. in ½ in. grads., 7½° per inch	"D"
12, 12a, 12b	6"	Weir elevations (5SR-4SR-6SR)	EL. 150-174 ft. in ¼ ft. grads., 12° per ft.	"C"
13a, 14d	6"	Ladder vs conduit water (1DM-2DG)	0-4 ft., in 1/10 ft. grads., 60° per ft.	"A"
13, 14	6"	Ladder vs Tailwater (2DM-3DG)	0-1.5 ft., in 1/10 ft. grads., 60° per ft.	"E"
14a, 14b	6"	Weirs 1 and 3 Elevation above or below Weir 2 (4DG-5DG)	-6 to +6 ft., in ¼ ft. grads., 20° per ft.	"F"

EQUIPMENT SCHEDULE

ITEM	EQUIPMENT	AMT.	DESCRIPTION
1	Combination starter	1	Non-reversing type for 25 H.P. motor
2	Circuit breaker	1	Line isolating circuit breaker; max. load, 40 H.P.
3	Circuit breaker	4	3-30 Amp., 600 V.; One as required for Item #11
4	Distribution panel - FR3	1	24 Ckt., 120 V. - 20 Amp Breakers
5	FQ1		
6	Relay reset	2	Manual reset for Item #8
8	Relays	2	Relay, general purpose, 2 N.C. & 2 N.O. contacts
9	Indicating light, control power	2	Indicating light, green, for 120 V. service
11	Transformer, T-5	1	10 KVA
12	Indicators	6	Synchro unit, indicator, general purpose
13	Indicators	2	Synchro unit, differential motor, indicator, general purpose
14	Depth selectors	4	Synchro unit, differential generator, high accuracy
15	Raise-lower switches & Ind. lights	3	Control switch, one-level, momentary contact
16	On-off switches	6	Control switch, one-level, maintain contacts
	Fish attraction pump indicator	6	Indicating light, red, for 230 V. service
	Fish attraction pump indicator	6	Indicating light, green, for 230 V. service
17	Lockout relays	11	Manual reset relays, associated with Item #18
18	Alarm relays	11	Overvoltage relay w/target indicator, manually reset
19	Control relays	11	Electronic relay
20	Capacitors		As required
21	Combination starter	3	Entrance weirs - 30 Amp Breakers
22	Circuit breaker (Spares)	3	50 Amp., 600 V.

Note:
Item numbers for equipment schedule are identical with those for nameplate data with the exception of the suffix letter. All equipment with the same item number is identical, but the lower-case suffix serves to locate it in the cabinet as well as defining its nameplate data.

NAMEPLATE DATA

ITEM	SIZE	AMT.	1ST. LINE	2ND. LINE	ITEM	SIZE	AMT.	1ST. LINE	2ND. LINE
					17e	1"x3"	1	Lockout Relay	Valve #3
1	1"x3"	1	Unwatering Pump #7		17f	1"x3"	1	Lockout Relay	Valve #4
2	1"x3"	1	Valves 1 thru 8		17g	1"x3"	1	Lockout Relay	Valve #5
3	1"x3"	3	480 V. Receptacles		17h	1"x3"	1	Lockout Relay	Valve #6
3a	1"x3"	1	Transformer T-5		17j	1"x3"	1	Lockout Relay	Valve #7
4	1"x3"	1	FR-3		17k	1"x3"	1	Lockout Relay	Valve #8
5	3"x5"	1	FQ1		18	1"x3"	1	Alarm Relay	Weir #1
9a	1"x3"	1	Control Power	Weirs	18a	1"x3"	1	Alarm Relay	Weir #2
9b	1"x3"	1	Control Power	Diffusers	18b	1"x3"	1	Alarm Relay	Weir #3
12	1"x3"	1	Elevation (MSL)	Weir #1	18c	1"x3"	1	Alarm Relay	Valve #1
12a	1"x3"	1	Elevation (MSL)	Weir #2	18d	1"x3"	1	Alarm Relay	Valve #2
12b	1"x3"	1	Elevation (MSL)	Weir #3	18e	1"x3"	1	Alarm Relay	Valve #3
12c	1"x3"	1	Gate Opening (In in.)	Diffuser #1	18f	1"x3"	1	Alarm Relay	Valve #4
12d	1"x3"	1	TW Elevation (MSL)	Fishway entrance	18g	1"x3"	1	Alarm Relay	Valve #5
12e	1"x3"	1	TW Elevation (MSL)	Pumphouse	18h	1"x3"	1	Alarm Relay	Valve #6
13	1"x3"	1	Height in ft.	Ladder water above TW	18j	1"x3"	1	Alarm Relay	Valve #7
13a	1"x3"	1	Height in ft.	Conduit water above LW	18k	1"x3"	1	Alarm Relay	Valve #8
14	1"x3"	1	Differential in ft.	Ladder water above TW	19	1"x3"	1	Control Relay	Weir #1
14a	1"x3"	1	Differential in ft.	Weir #1 above+ below- Weir #2	19a	1"x3"	1	Control Relay	Weir #2
14b	1"x3"	1	Differential in ft.	Weir #3 above+ below- Weir #2	19b	1"x3"	1	Control Relay	Weir #3
					19c	1"x3"	1	Control Relay	Valve #1
14d	1"x3"	1	Differential in ft.	Ladder & Conduit water	19d	1"x3"	1	Control Relay	Valve #2
15	1"x3"	1	Weir #1		19e	1"x3"	1	Control Relay	Valve #3
15a	1"x3"	1	Weir #2		19f	1"x3"	1	Control Relay	Valve #4
15b	1"x3"	1	Weir #3		19g	1"x3"	1	Control Relay	Valve #5
16	1"x3"	1	Fish attraction	Pump #1	19h	1"x3"	1	Control Relay	Valve #6
16a	1"x3"	1	Fish attraction	Pump #2	19j	1"x3"	1	Control Relay	Valve #7
16b	1"x3"	1	Fish attraction	Pump #3	19k	1"x3"	1	Control Relay	Valve #8
16c	1"x3"	1	Fish attraction	Pump #4	21	1"x3"	1	Weir #1	
16d	1"x3"	1	Fish attraction	Pump #5	21a	1"x3"	1	Weir #2	
16e	1"x3"	1	Fish attraction	Pump #6	21b	1"x3"	1	Weir #3	
17	1"x3"	1	Lockout Relay	Weir #1					
17a	1"x3"	1	Lockout Relay	Weir #2					
17b	1"x3"	1	Lockout Relay	Weir #3					
17c	1"x3"	1	Lockout Relay	Valve #1					
17d	1"x3"	1	Lockout Relay	Valve #2					

CABLE & CONDUIT TABLE

○	DESCRIPTION
1	#2/0 Ground wire
2	FQ1-q1-JB10-3 #19/25, 6 #6-2"C.
3	FQ1-c1-JB10-21 #19/25-2½"C.
4	FQ1-c2-JB10-20 #19/25-2½"C.
5	FQ1-c3-JB10-12 #19/25-2"C.
6	FQ1-c4-JB10-21 #19/25-2½"C.
7	FQ1-q1-JB12-3 #6, 3 #8-1½"C.
8	FQ1-c2-JB12-16 #19/25-2"C.
9	FQ1-c1-JB12-17 #19/25-2"C.
10	FQ1-c3-JB12-16 #19/25-2"C.
11	FQ1-c4-JB12-18 #19/25-2"C.
12	FQ1-c5-JB12-16 #19/25-2"C.
13	FQ1-c6-JB12-13/c #19/25-2"C.
14	FQ1-c7-JB12-13/c #19/25-2"C.
15	FQ1-c8-JB12-13/c #19/25-2"C.
16	FQ1-c9-JB12-13/c #19/25-2"C.
17	FQ1-q1-3 #8-1¼"C.
18	FR3-r19-2 #19/25-¾"C.
19	#2/0 Ground wire
20	FQ1-q1-JB11-6 #19/25, 3 #6-2"C.
21	FQ1-c1-JB11-19 #19/25-2½"C.
22	FQ1-c2-JB11-22 #19/25-2½"C.
23	FQ1-s1-JB11-2"C.
24	#2/0 Ground wire
25	DSQ1-u1-FQ1-5/c #19/25-1½"C.
26	DSQ1-q1-FQ1-3/c #2-2"C.

NOTES:
1. This dial face design is also to be used for a hand-set differential generator.
2. Dimensions shown are approximate only, and approved changes may be made to fit the contractor's standard equipment.

REVISION	DATE	DESCRIPTION	BY
A	21 Jun 60	Minor Revisions	ORG

U.S. ARMY ENGINEER DISTRICT
WALLA WALLA, WASHINGTON

JOHN DAY LOCK AND DAM
COLUMBIA RIVER, OREGON AND WASHINGTON
NORTH SHORE FISH LADDER
CONTROL CENTER FQI
GENERAL ARRANGEMENT AND DETAILS

DESIGNED: Beach
DRAWN:
CHECKED: G. Fernald
PREPARED: [signature] for CHIEF, ELECT., DES. SECT.
REVIEWED: CHIEF, SAFETY BRANCH
SUBMITTED: Otto R. Linn CHIEF, DESIGN BRANCH
RECOMMENDED: E. C. [signature] CHIEF, ENGINEERING DIVISION
APPROVED: [signature] COLONEL, C. E. DISTRICT ENGINEER
DATE 13 MAY 60
SCALE AS SHOWN
INV. NO. ENG. C-60-58
FILE NO. JDF-1-6-2/9
SHEET 9 OF

KUKER-RANKEN INC., SEATTLE, WASH. 3-20-56
JDFE0085.CIT
CONT 61-113 Filmed
5/30.32.017.6(1)

CORPS OF ENGINEERS

U. S. ARMY

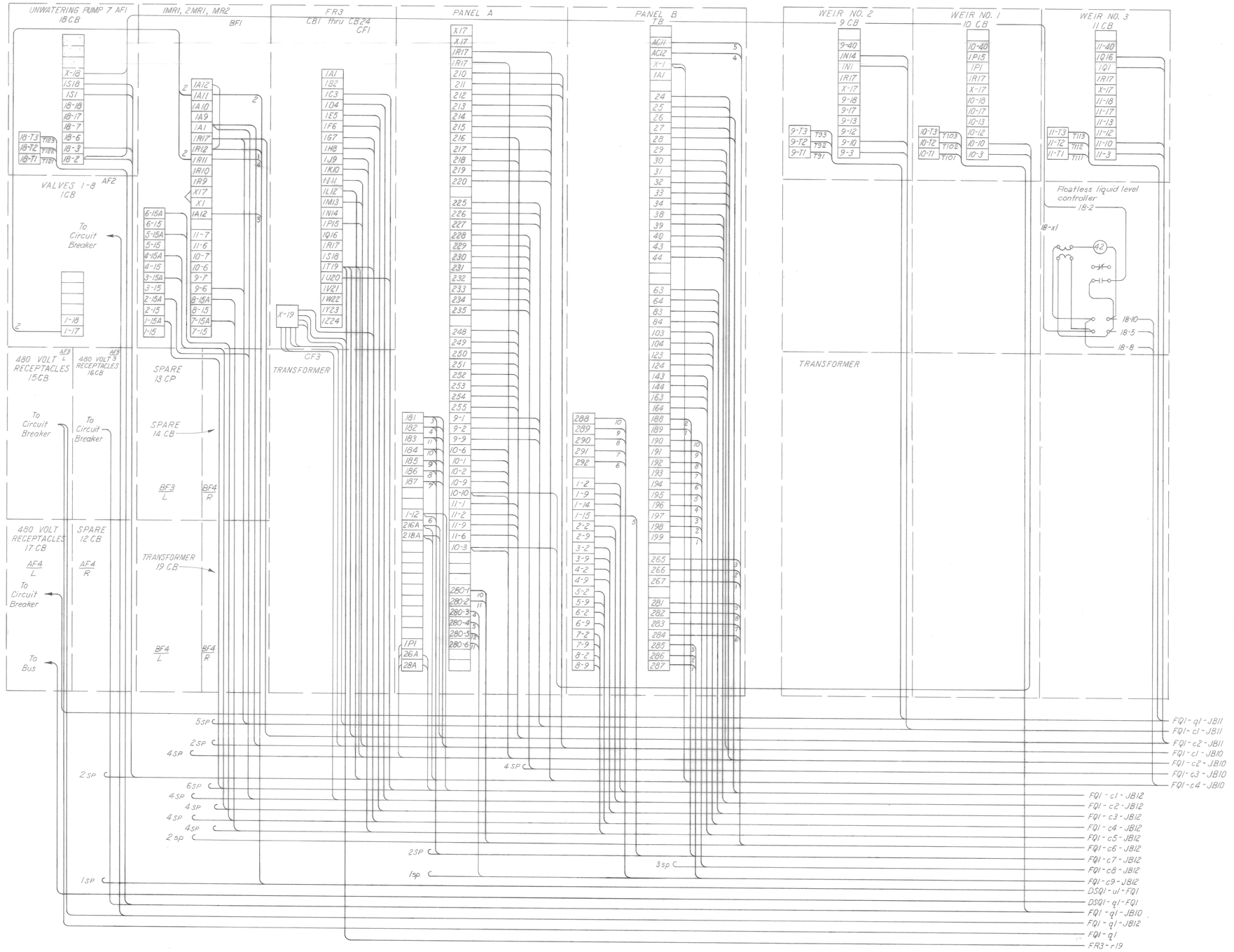

COLOR CODE		
CODE NO.	BASE	1st TRACER
1	Black	
2	White	
3	Red	
4	Green	
5	Orange	
6	Blue	
7	White	Black
8	Red	Black
9	Green	Black
10	Orange	Black
11	Blue	Black
12	Black	White
13	Red	White

REVISION	DATE	DESCRIPTION	BY
A	29 Dec 64	AS CONSTRUCTED	GJR

U. S. ARMY ENGINEER DISTRICT
WALLA WALLA, WASHINGTON

DESIGNED: HERRIGSTAD
DRAWN: E.E. LUBECK
CHECKED: B. SMITH
SUPERVISED: C. J. Robinson
CHIEF, ELECT. DES. SECT.

JOHN DAY LOCK AND DAM
COLUMBIA RIVER, OREGON AND WASHINGTON
NORTH SHORE FISH LADDER
FQ1 SWITCHGEAR
WIRING DIAGRAM

SUBMITTED: Otto R. Lunn
CHIEF, DESIGN BRANCH
RECOMMENDED: Howard A. Preston Asst.
CHIEF, ENGINEERING DIVISION

APPROVED: [signature] DATE 1 AUG 61
COLONEL, C. E. DISTRICT ENGINEER
SCALE AS SHOWN
INV. NO. ENG. C-60-2
FILE NO.
SHEET 149
JDF-1-6-5/10

JDFE0018.CIT CONT. NO. 60-150 VOL. NO. 3

Filmed

052851

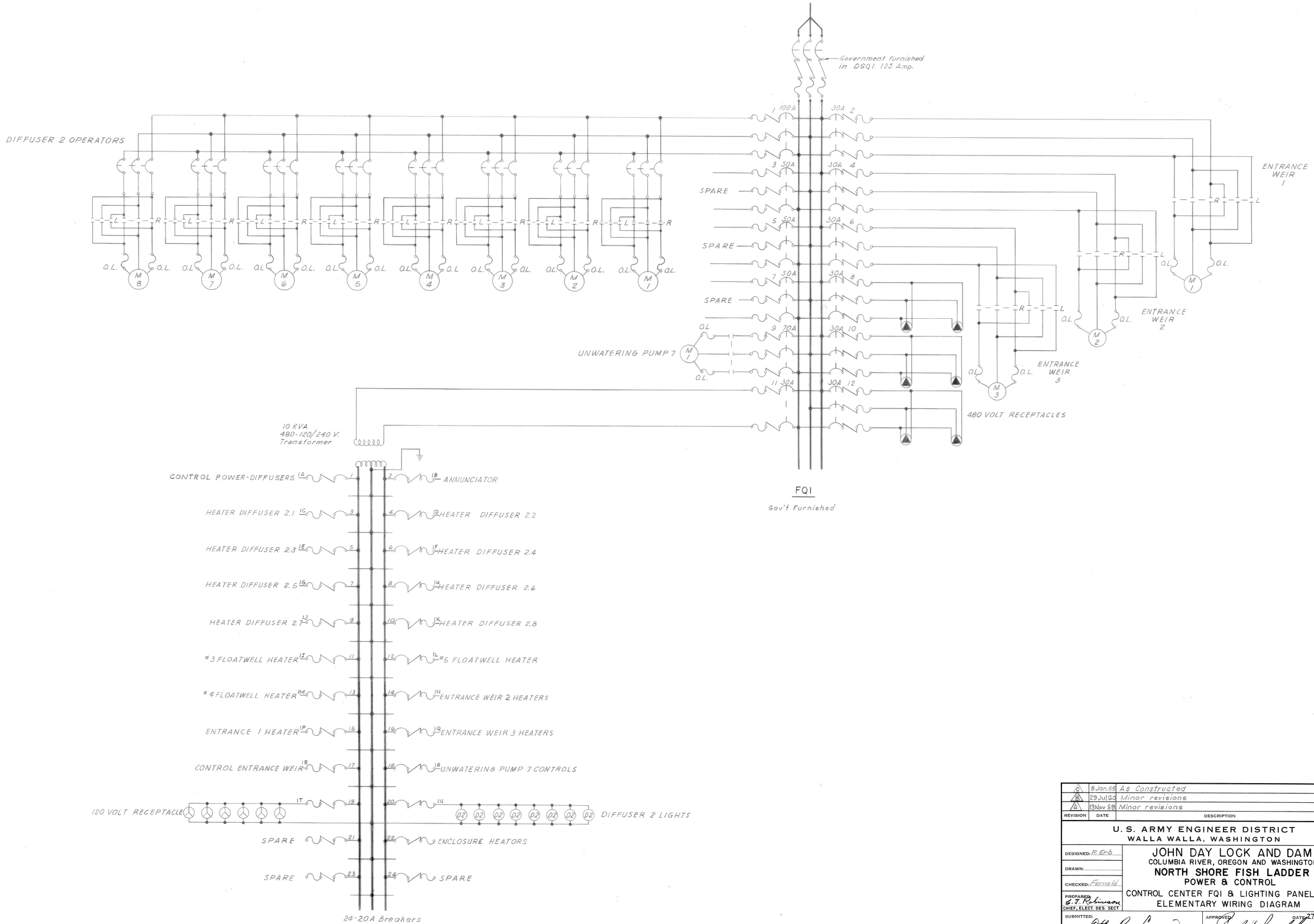

REVISION	DATE	DESCRIPTION	BY
C	8 Jan. 66	As Constructed	
B	29 Jul 60	Minor revisions	
A	13 Nov 59	Minor revisions	

U. S. ARMY ENGINEER DISTRICT
WALLA WALLA, WASHINGTON

DESIGNED: R. Erb
DRAWN:
CHECKED: Fernald
PREPARED: E. T. Robinson, CHIEF, ELECT. DES. SECT

JOHN DAY LOCK AND DAM
COLUMBIA RIVER, OREGON AND WASHINGTON
NORTH SHORE FISH LADDER
POWER & CONTROL
CONTROL CENTER FQ1 & LIGHTING PANEL FR3
ELEMENTARY WIRING DIAGRAM

SUBMITTED: Otto R. Lunn, CHIEF, DESIGN BRANCH
APPROVED: Paul T. Lombard, COLONEL, C. E. DISTRICT ENGINEER — DATE 27 Aug 59
RECOMMENDED: E. C. Thompson, CHIEF, ENGINEERING DIVISION
SCALE AS SHOWN
INV. NO. ENG.C-GO-2
FILE NO.
SHEET 142 JDF-1-6-5/3

JDFE0011.CIT VOLUME 3 CONTRACT 60-150

052851

HERCULENE FB163 K&E CO., N.Y. 49881

CORPS OF ENGINEERS

U. S. ARMY

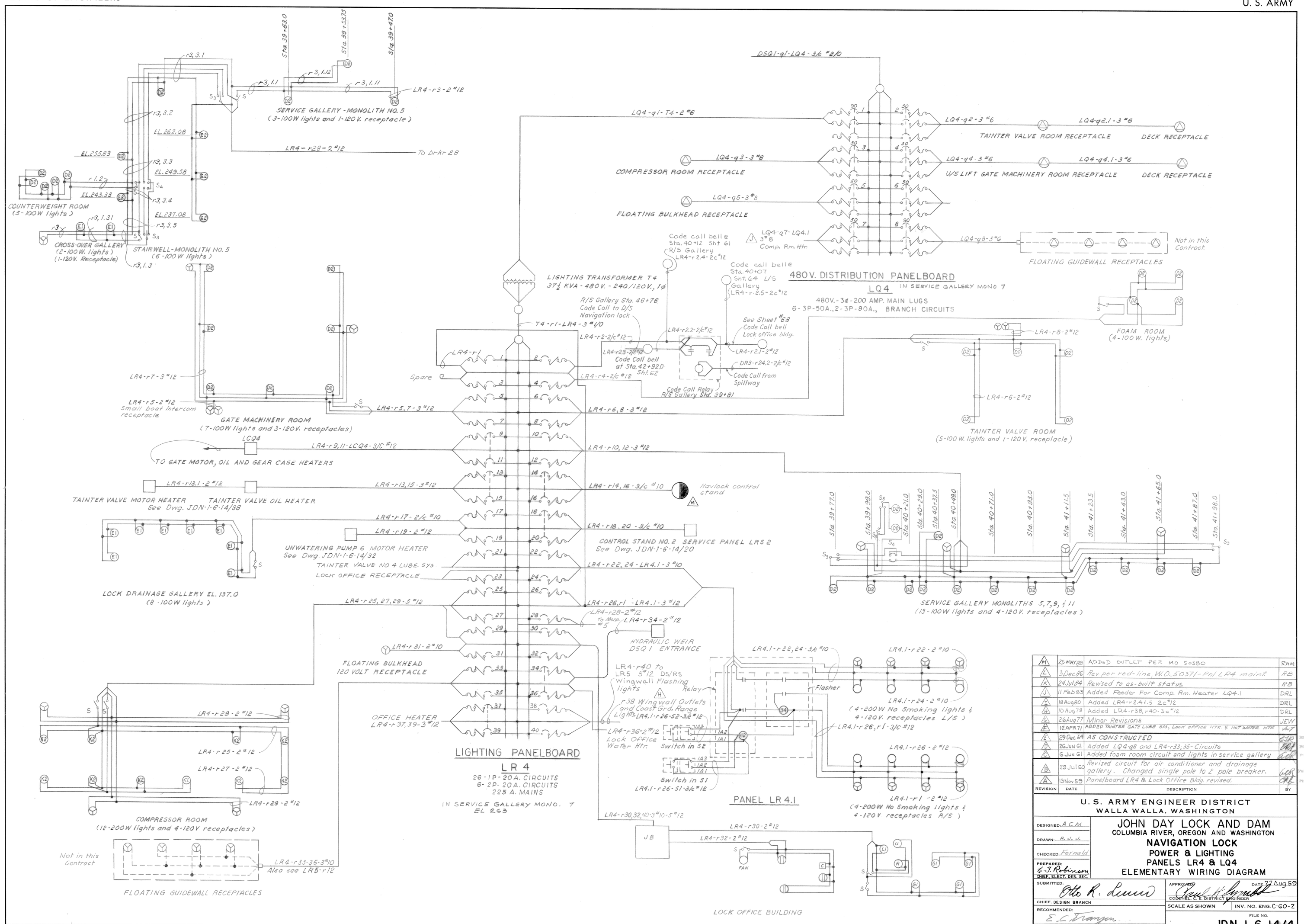

REVISION	DATE	DESCRIPTION	BY
M	25 MAY 88	ADDED OUTLET PER MO 50380	RAM
L	3 Dec 86	Rev. per red-line, W.O. 50371-Pnl LR4 maint.	RB
K	24 Jul 84	Revised to as-built status.	RB
J	11 Feb 83	Added Feeder For Comp. Rm. Heater LQ4.1	DRL
I	18 Aug 80	Added LR4-r2.4,1.5 2c #12	DRL
H	10 Aug 78	Added LR4-r38, r40-3c #12	DRL
G	26 Aug 77	Minor Revisions	JEW
F	12 APR 71	ADDED TAINTER GATE LUBE SYS, LOCK OFFICE HTR. & HOT WATER HTR.	WJT
E	29 Dec 69	AS CONSTRUCTED	[illegible]
D	26 JUN 61	Added LQ4-q8 and LR4-r33, 35-Circuits	[illegible]
C	6 JUN 61	Added foam room circuit and lights in service gallery	[illegible]
B	29 JUL 60	Revised circuit for air conditioner and drainage gallery. Changed single pole to 2 pole breaker.	[illegible]
A	13 Nov 59	Panelboard LR4 & Lock Office Bldg. revised.	[illegible]

U. S. ARMY ENGINEER DISTRICT
WALLA WALLA, WASHINGTON

DESIGNED: A.C.M.
DRAWN: R.V.J.
CHECKED: Fernald
PREPARED: E. J. Robinson, CHIEF, ELECT. DES. SEC.
SUBMITTED: Otto R. Lenn, CHIEF, DESIGN BRANCH
RECOMMENDED: E. C. Dangan, CHIEF, ENGINEERING DIVISION

JOHN DAY LOCK AND DAM
COLUMBIA RIVER, OREGON AND WASHINGTON
NAVIGATION LOCK
POWER & LIGHTING
PANELS LR4 & LQ4
ELEMENTARY WIRING DIAGRAM

APPROVED: Paul H. Arnold, COLONEL, C. E. DISTRICT ENGINEER — DATE 27 Aug 59
SCALE AS SHOWN
INV. NO. ENG. C-GO-2
SHEET 57
FILE NO. JDN-1-6-14/4

JDNE0052.CIT Filmed

VOL 3 CONTRACT 60-150

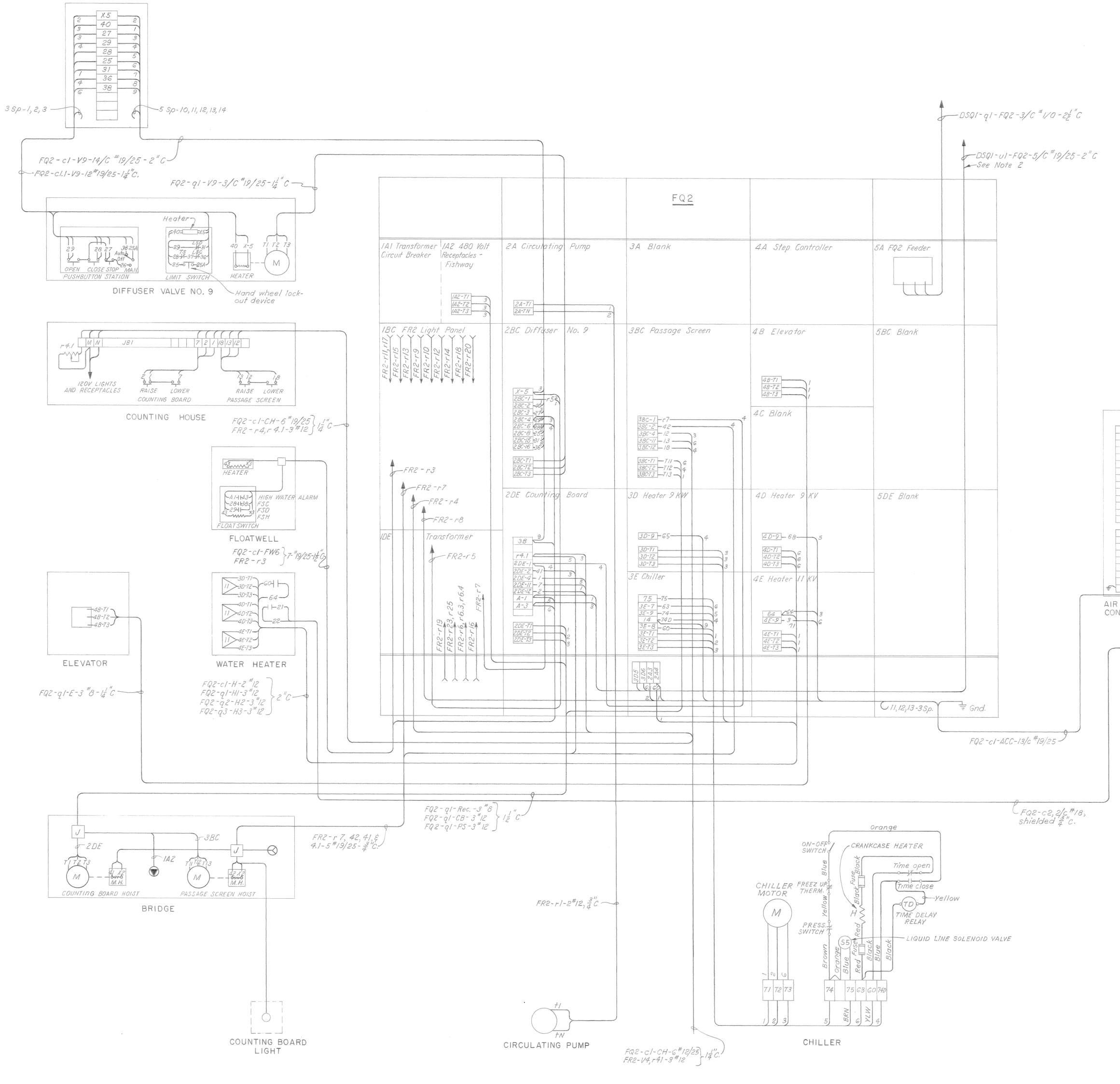

FR2 PANEL (See Note 1)	
CIRCUIT	FEEDS
FR2-r1	Circulating pump
FR2-r2	Air conditioning control
FR2-r3	Floatwell heater
FR2-r4	Counting house
FR2-r5	Diffuser gate r9 heaters
FR2-r6	Unit conditioner fans
FR2-r7	Deck receptacles, motor heaters for counting board and passage screen
FR2-r8	Exhaust fans
FR2-r9	Chlorinator
FR2-r10	Top floor lights
FR2-r11	Second floor lights
FR2-r12	First floor lights
FR2-r13	Stairway lights
FR2-r14	Top floor receptacles
FR2-r15	Second floor receptacles
FR2-r16	First floor receptacles
FR2-r17	Hallway lights (Second floor)
FR2-r18	Gallery access lights
FR2-r19	Air compressor
FR2-r20	Elevator lights
FR2-r21	Space only
FR2-r22	Space only
FR2-r23, r25	Domestic hot water
FR2-r24, r26	Spare 2p

NOTES:

1. FR2 Panel Conduits are not shown unless run in conjunction with FQ2 circuits.
2. All bell alarms to be connected in parallel.
3. Refer to Dwgs. JDF-1-6-5/8 & JDN-1-6-14/5.

REVISION	DATE	DESCRIPTION	BY
A	73 Sep 25	AS CONSTRUCTED	

U. S. ARMY ENGINEER DISTRICT
WALLA WALLA, WASHINGTON

DESIGNED: R.W. SMITH
DRAWN: E.E. LUBECK
CHECKED: G. Fernald
SUPERVISED: C. T. Robinson, CHIEF, ELECT. DES. SECT.

JOHN DAY LOCK AND DAM
COLUMBIA RIVER, OREGON AND WASHINGTON
NAVIGATION LOCK
POWER AND LIGHTING
FQ2 CONTROL CENTER
CONNECTION DIAGRAM

SUBMITTED: Otto R. Lunn, CHIEF, DESIGN BRANCH
APPROVED: DATE: COLONEL, C. E. DISTRICT ENGINEER
RECOMMENDED: E. C. Tranger, CHIEF, ENGINEERING DIVISION
SCALE AS SHOWN
INV. NO. ENG. C 60-2
SHEET 58.1
FILE NO. JDN-1-6-14/5.1

JDNE0054.CIT CONT. NO. 60-150 FILE 58.1 VOL. NO. 3

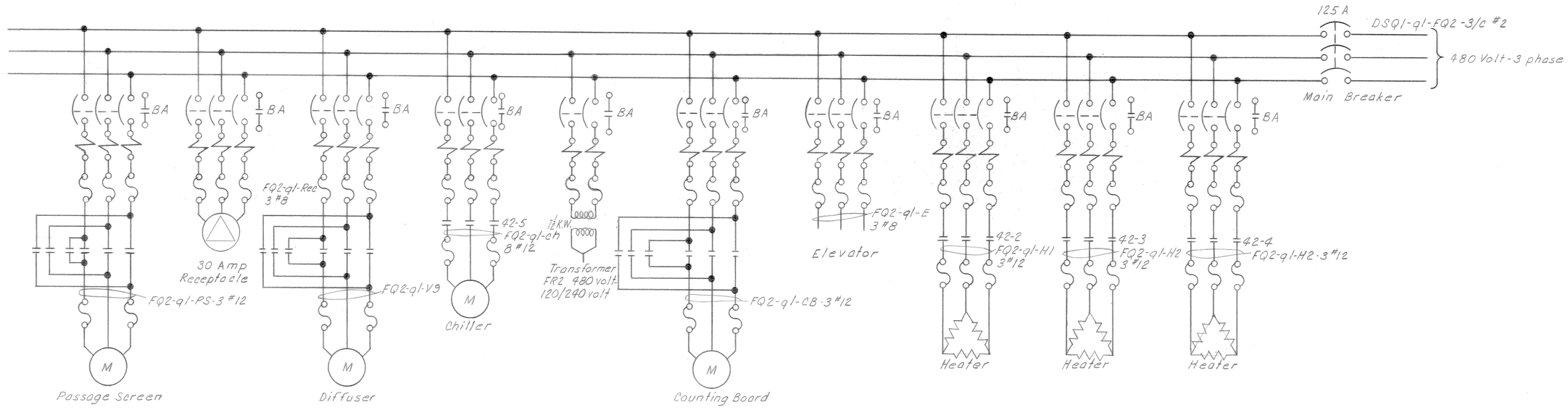

CONTROL CENTER FQ2

480 Volt Bus

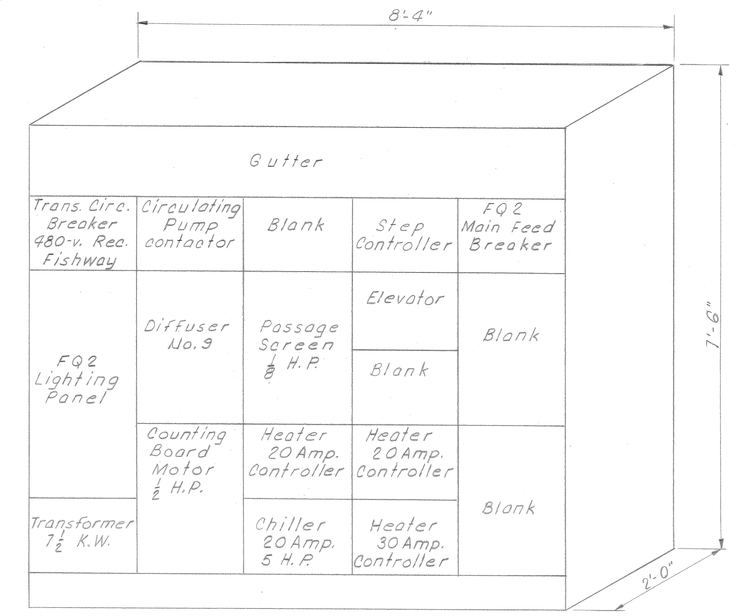

FQ2

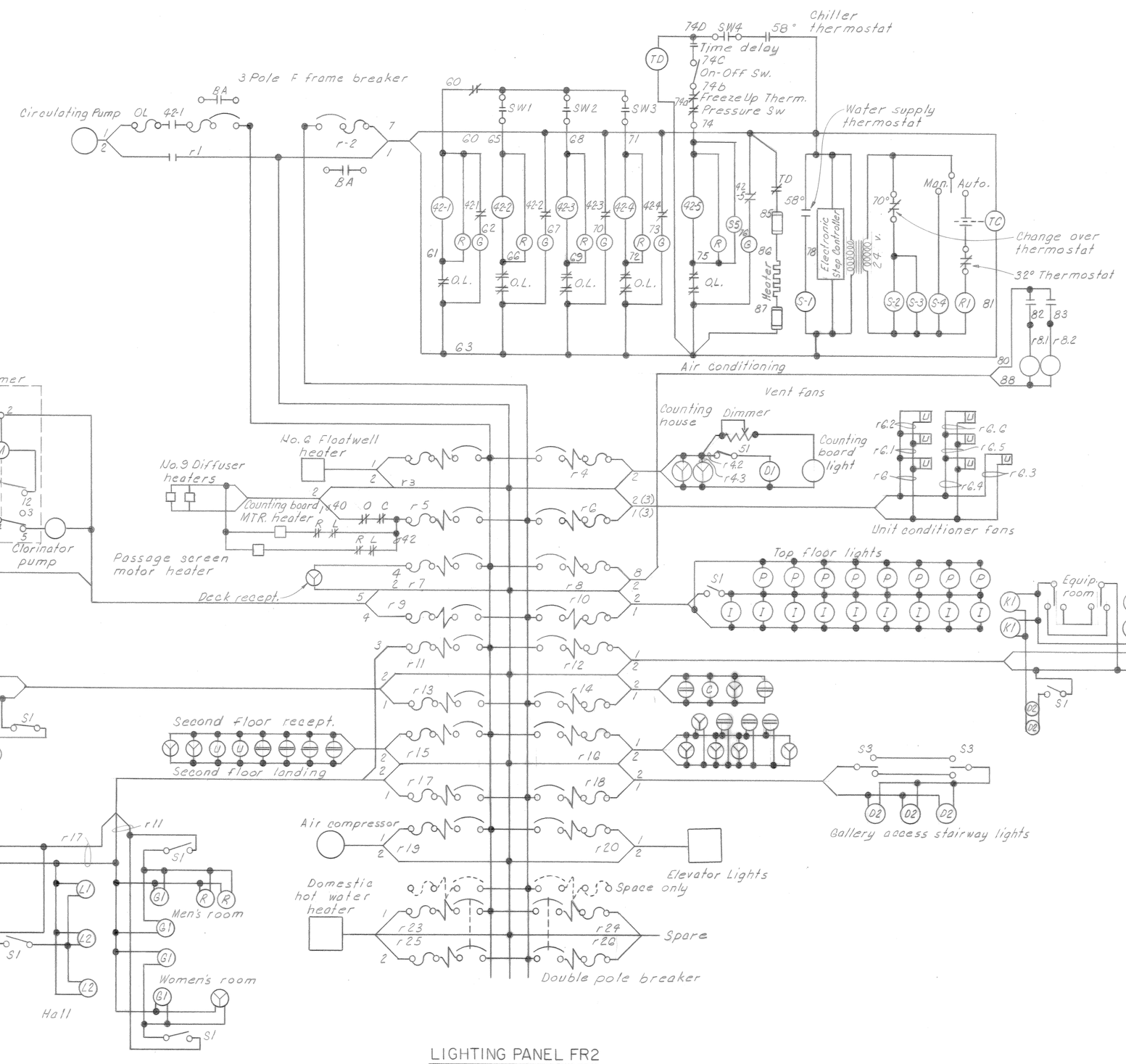

LIGHTING PANEL FR2

18 Single Pole 20 Amp. Breakers
2 Double Pole 20 Amp. Breakers
2-3 Pole 20 Amp. Breakers

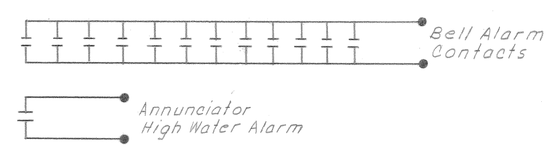

Note:
1. Control center FQ2, including lighting panel FR2, will be Government furnished. All the heating and cooling equipment and accessories, except contactors shall be contractor furnished.

REVISION	DATE	DESCRIPTION	BY
C	73 Sep 25	Revised and redrawn "As Built"	

U. S. ARMY ENGINEER DISTRICT
WALLA WALLA, WASHINGTON

DESIGNED: B.H.F.
DRAWN: J.L.
CHECKED: Fernald
SUPERVISED: CHIEF ELECT. DES. SECT.

JOHN DAY LOCK AND DAM
COLUMBIA RIVER, OREGON AND WASHINGTON
NAVIGATION LOCK
POWER & LIGHTING
PANELS FQ2 & FR2
ELEMENTARY WIRING DIAGRAM

SUBMITTED: CHIEF, DESIGN BRANCH
APPROVED: COLONEL, C. E. DISTRICT ENGINEER
DATE
RECOMMENDED: CHIEF, ENGINEERING DIVISION
SCALE AS SHOWN
INV. NO. C-60-2
SHEET 58
FILE NO. JDN-1-6-14/5

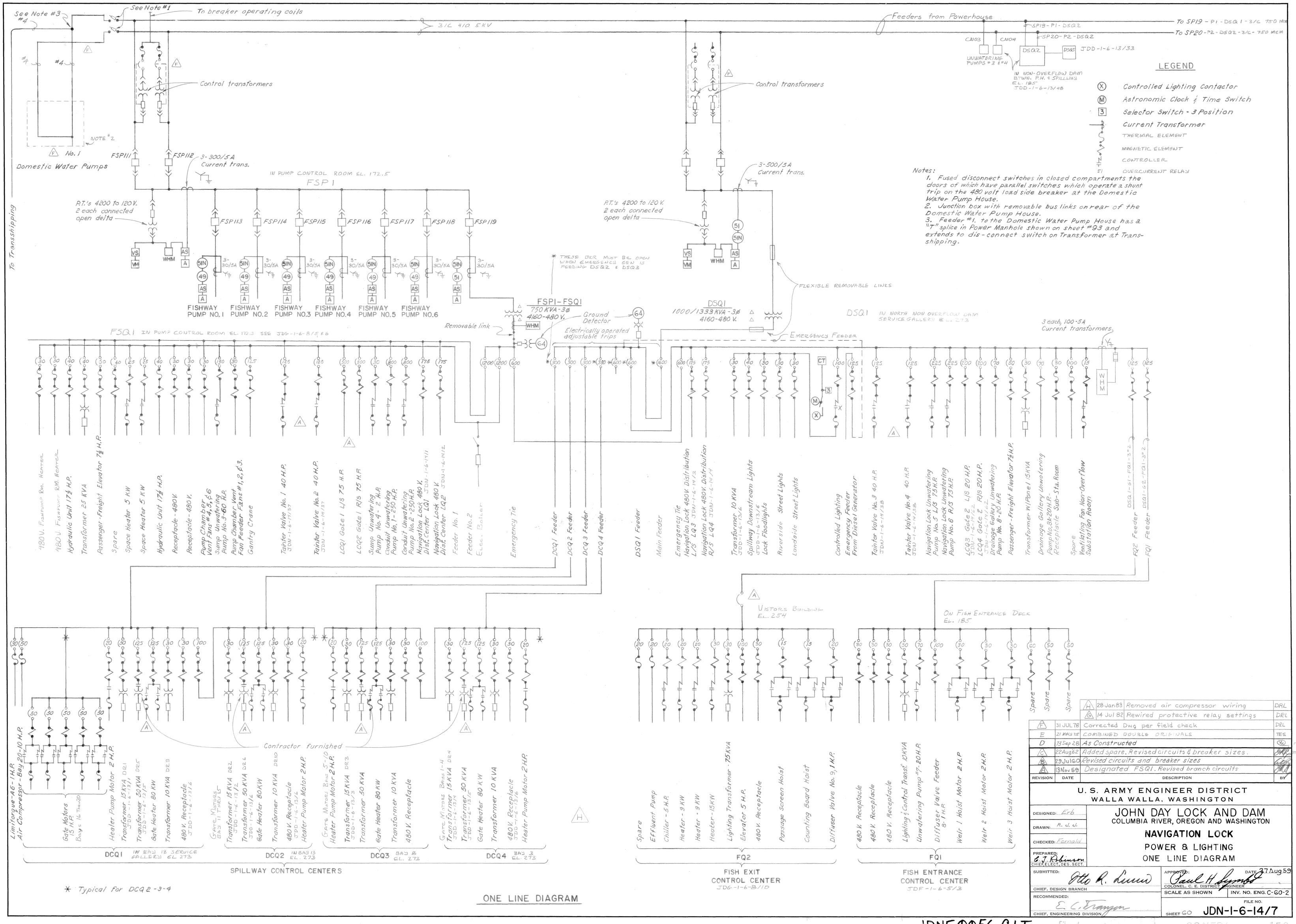

ONE LINE DIAGRAM

REVISION	DATE	DESCRIPTION	BY
H	28 Jan 83	Removed air compressor wiring	DRL
G	14 Jul 82	Rewired protective relay settings	DRL
F	31 JUL 78	Corrected Dwg per field check	DRL
E	21 MAR 75	COMBINED DOUBLE ORIGINALS	TES
D	13 Sep 28	As Constructed	
C	22 Aug 62	Added spare. Revised circuits & breaker sizes.	
B	29 Jul 60	Revised circuits and breaker sizes	
A	13 Nov 59	Designated FSQ1. Revised branch circuits	

U. S. ARMY ENGINEER DISTRICT
WALLA WALLA, WASHINGTON

JOHN DAY LOCK AND DAM
COLUMBIA RIVER, OREGON AND WASHINGTON

NAVIGATION LOCK
POWER & LIGHTING
ONE LINE DIAGRAM

DESIGNED: Erb
DRAWN: R. J. J.
CHECKED: Fernald
PREPARED: E. J. Robinson, CHIEF, ELECT. DES. SECT.
SUBMITTED: Otto R. Lund, CHIEF, DESIGN BRANCH
RECOMMENDED: E. C. Tramper, CHIEF, ENGINEERING DIVISION
APPROVED: Paul H. Lynch, COLONEL, C. E. DISTRICT ENGINEER
DATE: 27 Aug 59
SCALE AS SHOWN
INV. NO. ENG. C-G0-2
FILE NO.
SHEET G0
JDN-1-6-14/7

JDNE0056.CIT

Filmed

CONTRAC 150

REFERENCE PLATES

2. John Day South Fishladder Modifications

(Selected drawings)

Drawing No.	Sheet
	Cover Sheet-
JDF-0-13/1	W1
JDF-2-18/1	S1
JDF-2-18/2	S2
JDF-2-18/3	S3
JDF-2-18/4	S4
JDF-2-18/5	S5
JDF-2-18/6	S6
JDF-2-18/7	S7
JDF-2-18/8	S8
JDF-2-18/9	S9
JDF-2-18/10	S10
JDF-2-18/11	S11
JDF-2-18/12	S12
JDF-2-18/13	S13
JDF-2-18/14	S14
JDF-3-14/1	M1
JDF-3-14/2	M2
JDF-3-14/3	M3
JDF-3-14/4	M4
JDF-3-14/5	M5
JDF-6-12/1	E1
JDF-6-12/2	E2
JDF-6-12/3	E3
JDF-6-12/4	E4
JDF-6-12/5	E5
JDF-6-12/6	E6
JDF-6-12/7	E7
JDF-6-12/8	E8

US Army Corps
of Engineers
Portland District

JOHN DAY LOCK AND DAM

SOUTH SHORE FISH LADDER WEIR RECONSTRUCTION

THIS PROJECT WAS DESIGNED BY THE PORTLAND DISTRICT OF THE U.S. ARMY CORPS OF ENGINEERS. THE INITIALS OR SIGNATURES AND REGISTRATION DESIGNATIONS OF INDIVIDUALS APPEAR ON THESE PROJECT DOCUMENTS WITHIN THE SCOPE OF THEIR EMPLOYMENT AS REQUIRED BY ER 1110-1-8152 AND INDICATE OFFICIAL RECOMMENDATION AND APPROVAL OF ALL THE DRAWINGS IN THIS SET.

14 AUG 02
RICHARD W. HOBERNICHT, COMMANDER — DATE
COLONEL, CORPS OF ENGINEERS

Jeffrey S. Hurt — Aug. 14, 2002
JEFFREY S. HURT, P.E. — DATE
TECHNICAL MANAGER
STRUCTURAL & ARCH. DESIGN SECTION

Dale S. Mazar — 14 AUG 02
DALE S. MAZAR, P.E. — DATE
CHIEF, DESIGN BRANCH

Dale S Mazar — 14 AUG 02
for HOWARD B. JONES, P.E. — DATE
CHIEF, ENGINEERING DIVISION

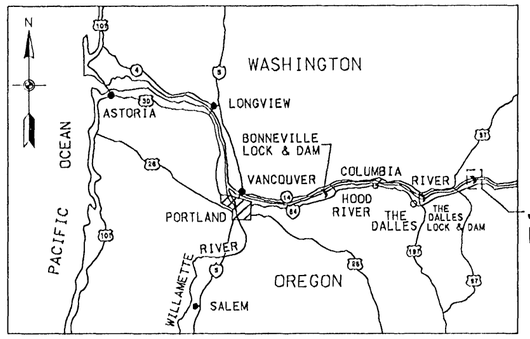

VICINITY MAP

10 0 10 20 30 40 50
MILES

SHEET NO.	DRAWING NO.	TITLE
GENERAL		
W1	JDF-0-13/1	PROJECT LOCATION MAP AND INDEX
STRUCTURAL		
S1	JDF-2-18/1	GENERAL STRUCTURAL NOTES
S2	JDF-2-18/2	SITE PLAN AND SECTION
S3	JDF-2-18/3	EXISTING PLAN AND SECTION W/DEMOLITION I
S4	JDF-2-18/4	EXISTING PLAN AND SECTION W/DEMOLITION II
S5	JDF-2-18/5	EXISTING PLAN AND SECTION W/DEMOLITION III
S6	JDF-2-18/6	NEW PLAN AND SECTION I
S7	JDF-2-18/7	NEW PLAN AND SECTION II
S8	JDF-2-18/8	NEW PLAN AND SECTION III
S9	JDF-2-18/9	NEW WEIR ELEVATIONS,SECTION,AND DETAILS
S10	JDF-2-18/10	CONDUIT PIPE CHASE DETAILS
S11	JDF-2-18/11	OPERATOR GATE & BEARING BLOCKOUTS DETAILS I
S12	JDF-2-18/12	OPERATOR GATE & BEARING BLOCKOUTS DETAILS II
S13	JDF-2-18/13	NEW WEIR ELEVATIONS, SECTION, AND DETAILS I
S14	JDF-2-18/14	NEW WEIR ELEVATIONS, SECTION, AND DETAILS II
S15	JDF-2-18/15	REINFORCEMENT PLAN AND SECTION WEIRS 1-6
S16	JDF-2-18/16	REINFORCEMENT PLAN AND SECTION WEIRS 7-23
S17	JDF-2-18/17	REINFORCEMENT SECTIONS SHEET I
S18	JDF-2-18/18	REINFORCEMENT SECTIONS SHEET II
S19	JDF-2-18/19	NEW SIDEWALL GUARDRAIL DETAILS
S20	JDF-2-18/20	NEW WALKWAY FRAMING PLAN
S21	JDF-2-18/21	FISH LADDER WALKWAY PLAN
S22	JDF-2-18/22	FISH LADDER WALKWAY SECTIONS
S23	JDF-2-18/23	WALKWAY CONNECTION SECTIONS AND DETAILS
S24	JDF-2-18/24	OPERATOR MOUNTING BRACKET
S25	JDF-2-18/25	RESERVED
S26	JDF-2-18/26	WEIR 23 GRATING PLAN
S27	JDF-2-18/27	WEIR 23 GRATING SECTIONS AND DETAILS
S28	JDF-2-18/28	LADDER SECTIONS AND DETAILS I
S29	JDF-2-18/29	LADDER SECTIONS AND DETAILS II
S30	JDF-2-18/30	WEIR 23 CONDUIT CHASE SECTIONS AND DETAILS
MECHANICAL		
M1	JDF-3-14/1	MECHANICAL PLAN AND ELEVATIONS WEIRS 12-23
M2	JDF-3-14/2	TYPICAL SECTIONS WEIRS 12-23
M3	JDF-3-14/3	BEARING DETAILS
M4	JDF-3-14/4	MOVABLE SILL DETAILS
M5	JDF-3-14/5	GATE DETAILS
ELECTRICAL		
E1	JDF-6-12/1	GENERAL NOTES AND LEGEND
E2	JDF-6-12/2	ELECTRICAL SITE PLAN
E3	JDF-6-12/3	ONE-LINE DIAGRAM AND PANEL SCHEDULE
E4	JDF-6-12/4	ELECTRICAL & MECHANICAL -- DEMOLITION PLAN
E5	JDF-6-12/5	ELECTRICAL INSTALLATION PLAN
E6	JDF-6-12/6	PLAN WEIRS 12 - 23
E7	JDF-6-12/7	TYPICAL GATE OPERATOR CONTROL SCHEMATIC
E8	JDF-6-12/8	TYPICAL GATE OPERATOR WIRING DIAGRAM
E9	JDF-6-12/9	WEIR GATE CONTROL PANEL WIRING DIAGRAM 1
E10	JDF-6-12/10	WEIR GATE CONTROL PANEL WIRING DIAGRAM 2
E11	JDF-6-12/11	WEIR GATE CONTROL PANEL WIRING DIAGRAM 3
E12	JDF-6-12/12	WEIR GATE CONTROL PANEL WIRING DIAGRAM 4
E13	JDF-6-12/13	MONOLITH 14 CONDUIT ROUTING
E14	JDF-6-12/14	WEIR GATE CONTROL PANEL FRONT LAYOUT
E15	JDF-6-12/15	WEIR GATE CONTROL PANEL INTERIOR LAYOUT
E16	JDF-6-12/16	DETAILS SHEET 1
E17	JDF-6-12/17	DETAILS SHEET 2

INFORMATIONAL DRAWINGS
(SEE SHEET S1)

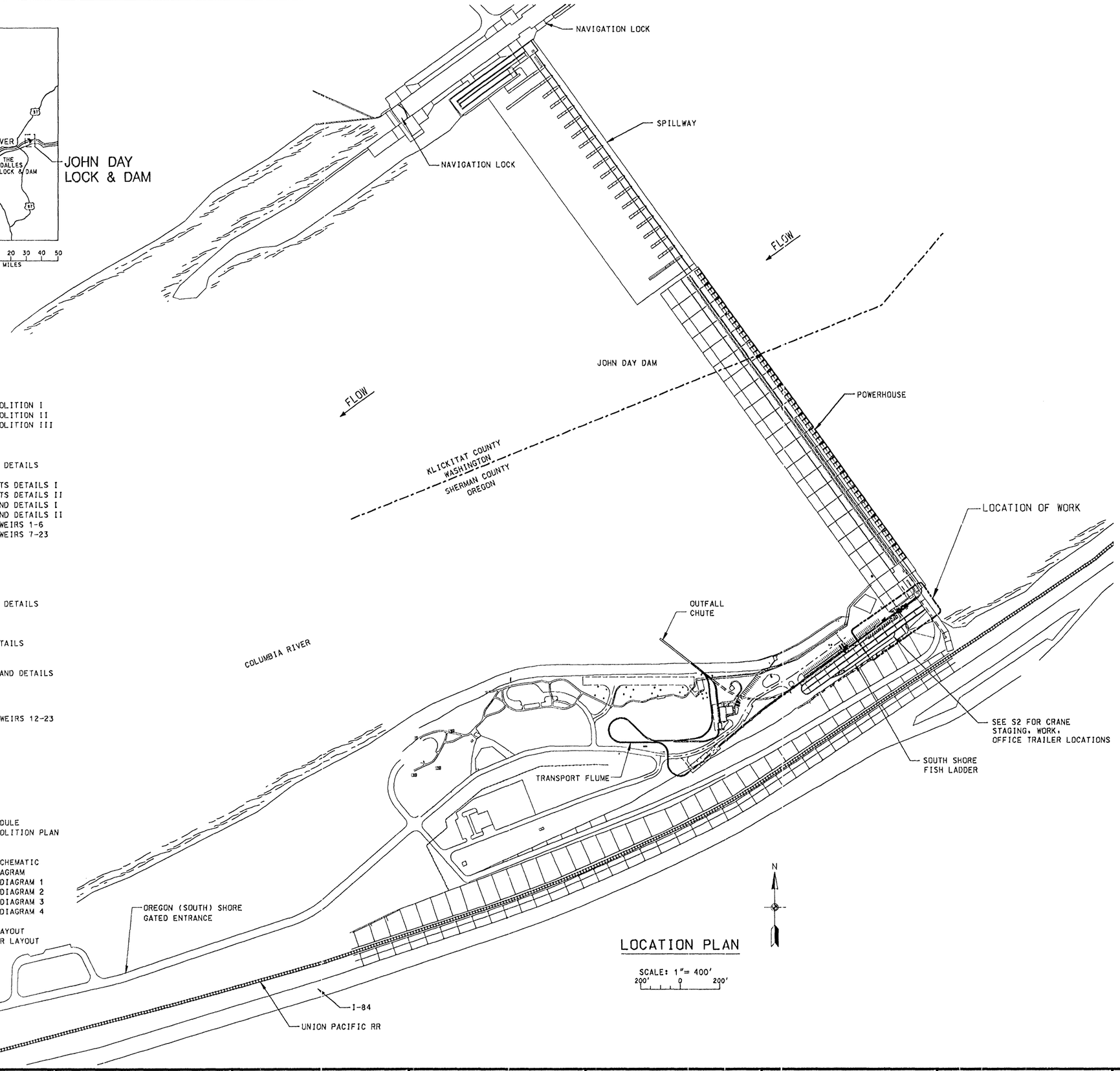

LOCATION PLAN

SCALE: 1"= 400'
200' 0 200'

US Army Corps of Engineers
Portland District

Revision	Date	Description	By

Designed by: J. HURT
Drawn by: J. VANDEGRIFT
Checked by: M. HANSON
Date: 08 AUGUST 2002
CADD File Name: jdw001f13c01.DGN
Technical Manager: J. HURT
Submitted by: DONALD R. CHAMBERS, P.E. Chief, Structural & Arch. Design

U.S. ARMY ENGINEER DISTRICT
CORPS OF ENGINEERS
PORTLAND, OREGON

COLUMBIA RIVER — OREGON - WASHINGTON
JOHN DAY LOCK AND DAM
SOUTH SHORE FISH LADDER
FISH LADDER IMPROVEMENTS
STRUCTURAL — WEIR RECONSTRUCTION
PROJECT LOCATION MAP AND INDEX

DRAWING STATUS:
FINAL

DRAWING NO.
JDF-0-13/1

SHEET
W1

..\Drawings\jdw001f13c01.dgn 08/13/2002 02:15:43 PM

GENERAL STRUCTURAL NOTES

1. SCOPE

1.1 THESE GENERAL STRUCTURAL NOTES COVER ALL STRUCTURAL FEATURES OF THE SOUTH SHORE FISH LADDER WEIR RECONSTRUCTION U.N.O.

1.2 THESE NOTES ARE TYPICAL UNLESS NOTED OR DETAILED OTHERWISE ON THE DRAWINGS.

2. CONCRETE

2.1 ALL NEW CONCRETE SHALL HAVE A MINIMUM COMPRESSIVE STRENGTH OF 4000 P.S.I. AT 28 DAYS.

2.2 ALL EXPOSED EDGES AND CORNERS OF CONCRETE SHALL HAVE ¾" CHAMFERS U.N.O.

2.3 ALL RE-ENTRANT CORNERS SHALL HAVE 1½" FILLETS EXCEPT AT THE JUNCTION OF WALL AND FLOOR SURFACES WHERE FILLET IS NOT CAST SIMULTANEOUSLY WITH ADJOINING MEMBER, OR AS OTHERWISE NOTED.

2.4 ALL NEW AND EXISTING CONCRETE SURFACES THAT WILL HAVE NEW CONCRETE PLACED AGAINST IT SHALL BE ROUGHENED TO AN AMPLITUDE OF ¼" AND SHALL BE PREPARED AS PER THE SPECIFICATIONS.

3. CONCRETE COVER

3.1 UNLESS OTHERWISE NOTED, THE MINIMUM COVER SHALL BE 1½". THE MINIMUM COVER SHALL BE THE CLEAR DISTANCE FROM THE EDGE OF THE REINFORCEMENT TO THE EDGE OF THE CONCRETE.

4. REINFORCEMENT

4.1 PREPARATION FOR PLACING DRAWINGS AND BAR BENDING SCHEDULES SHALL BE IN ACCORDANCE WITH THE MOST RECENT EDITION OF ACI 315,"MANUAL OF STANDARD PRACTICE FOR DETAILING REINFORCED CONCRETE STRUCTURES."

4.2a ALL REINFORCEMENT STEEL SHALL CONFORM TO ASTM A 615, GRADE 60 REQUIREMENTS.

4.2b REINFORCING STEEL TO BE WELDED SHALL BE ASTM A706, GRADE 60.

4.2c DEVELOPMENT, EMBEDMENT AND SPLICE LENGTHS FOR REINFORCING BARS USED IN THIS CONTRACT SHALL BE AS SHOWN ON THE DRAWINGS AND IN ACCORDANCE W/ACI 318-99.

4.3 UNLESS OTHERWISE NOTED, ALL HOOKS SHALL BE STANDARD HOOKS AS DEFINED BY ACI 318-99. 90° HOOKS MAY BE SUBSTITUTED FOR 135° STIRRUP AND TIE HOOKS FOR NUMBER 5 BARS AND SMALLER BARS.

4.4 BAR SPACING DIMENSIONS ARE MEASURED TO THE CENTERS OF BARS.

4.5 A SYMBOL SUCH AS STAG. SPL. INDICATES REINFORCING BARS TO BE STAGGER LAP SPLICED (CLASS B) BY ALTERNATING LAP LOCATIONS AS SHOWN, AND PROVIDING THE INDICATED LAP LENGTH.

4.6 A NOTATION SUCH AS 12 12 FOLLOWING THE BAR SIZE AND SPACING INDICATES A BENT BAR WITH AN OUTSIDE-TO-OUTSIDE DIMENSION (NOT BAR LENGTH) OF 12". A LETTER OR DIMENSION ON THE SHORT LEG INDICATES THE FOLLOWING:

L: EXTEND BAR LAP SPLICE LENGTH BEYOND BEND

E: EXTEND BAR EMBEDMENT LENGTH BEYOND CROSSING BAR

M: PROVIDE STANDARD 90° HOOK.

DIMENSION: OUTSIDE-TO-OUTSIDE LENGTH OF SHORT LEG WHEN NO LETTER OR DIMENSION IS GIVEN. PROVIDE A STANDARD 90° HOOK.

4.7 REINFORCING BARS SHALL NOT CONTINUE ACROSS AN EXPANSION JOINT.

4.8 ANY EMBEDDED STAINLESS STEEL BOLTS OR OTHER HARDWARE SHALL NOT BE ALLOWED TO CONTACT THE REINFORCING STEEL IN THE CONCRETE.

5. CONCRETE FINISHING

5.1 CONCRETE SURFACES SHALL BE FINISHED AS REQUIRED IN THE SPECIFICATIONS.

7. STRUCTURAL STEEL

7.1 U.N.O., ALL STEEL SHAPES, PLATES, AND BARS SHALL MEET ASTM A572 GRADE 50 REQUIREMENTS.

7.2 U.N.O. ALL STEEL PIPE SHALL MEET ASTM A 53, TYPE E OR S, GRADE B REQUIREMENTS.

7.3 UNLESS NOTED OTHERWISE ALL STEEL TUBE SHAPES SHALL MEET ASTM A500, GRADE B REQUIREMENETS.

7.4 UNLESS NOTED OTHERWISE ALL EMBEDDED THREADED ROD SHALL MEET ASTM A449, GRADE 1 REQUIREMENTS.

8. STRUCTURAL WELDS

8.1 ALL WELDS SHALL BE E70XX U.N.O.

ABBREVIATIONS

ANCH.	= ANCHOR	N.C.	= NO CHAMFER
A.B.	= ANCHOR BOLT	N.F.	= NEAR FACE
APPROX.	= APPROXIMATE	NO.	= NUMBER
B.C.	= BOLT CENTERS	NOM	= NOMINAL
BLDG.	= BUILDING	N.T.S.	= NOT TO SCALE
BRG	= BEARING	O.C.	= ON CENTER
C	= CHANNEL	O.C.E.W.	= ON CENTER EACH WAY
℄	= CENTERLINE	O.D.	= OUTSIDE DIAMETER
C TO C	= CENTER TO CENTER	OPP	= OPPOSITE
CLR	= CLEAR	PERF.	= PERFORATED
CONC.	= CONCRETE	±	= PLUS OR MINUS
C.J.	= CONSTRUCTION JOINT	PL	= PLATE
CONTR. JT.	= CONTRACTION JOINT	P.S.I.	= POUNDS PER SQUARE INCH
CP	= COMPLETE PENETRATION	PVC	= POLYVINYL CHLORIDE
CRES	= CORROSION RESISTING STEEL	RAD.	= RADIUS
		REQ'D	= REQUIRED
CSK	= COUNTERSINK	SCHED., SCH	= SCHEDULE
DET.	= DETAIL	SHT	= SHEET
DIA., ϕ	= DIAMETER	SIM	= SIMILAR
D/S	= DOWNSTREAM	STD	= STANDARD
DWG	= DRAWING	S.F.	= SQUARE FOOT
EA.	= EACH	S.S.	= STAINLESS STEEL
EL., ELEV.	= ELEVATION	STA.	= STATION
E.J., EXP. JT.	= EXPANSION JOINT	STC	= STEEL TROWELED CONCRETE
		SYMM.	= SYMMETRICAL
E.S.	= EQUALLY SPACED	T.& B.	= TOP AND BOTTOM
E.W.	= EACH WAY	T.J.	= TROWELED JOINT
EXIST.	= EXISTING	TO	= TOP OF
FT.	= FEET	TOC	= TOP OF CONCRETE
F.W.	= FLAT WASHER	TOF	= TOP OF FOOTING
GA.	= GAUGE	TOS	= TOP OF SLAB
GALV.	= GALVANIZED	TOW	= TOP OF WALL
HOR.	= HORIZONTAL	T.S.	= TUBULAR STEEL
I.D.	= INSIDE DIAMETER	TYP.	= TYPICAL
I.E.	= INVERT ELEVATION	U.N.O.	= UNLESS NOTED OTHERWISE
L	= ANGLE	U/S	= UPSTREAM
LF.	= LINEAR FEET	WP	= WELD PLATE
LONGIT., LONG.	= LONGITUDINAL	W.P.	= WORK POINT
MAX., MIN.	= MAXIMUM, MINIMUM	W.S.	= WATERSTOP
MECH.	= MECHANICAL	WCJ	= WALL CONSTRUCTION JOINT
MK	= MARK	WWF	= WELDED WIRE FABRIC
		W/	= WITH

REINFORCEMENT ABBREVIATIONS

B.F.	=	BOTTOM FACE
CLR.	=	CLEAR
D.& G.	=	DRILL & GROUT
DWL'S	=	DOWELS
E.F.	=	EACH FACE
EQ. SP.	=	EQUALLY SPACED
E.W.	=	EACH WAY
F.F.	=	FAR FACE
I.F.	=	INSIDE FACE
N.F	=	NEAR FACE
O.F	=	OUTSIDE FACE
O.L.	=	OUTSIDE LAYER
REINF.	=	REINFORCEMENT
STAG. SPL.	=	STAGGER SPLICE
STIR.	=	STIRRUP
T.F.	=	TOP FACE

SYMBOLS

EXISTING CONCRETE

CONCRETE TO BE REMOVED

NEW CONCRETE IN SECTION

INFORMATIONAL DRAWINGS

SHEET NO.	DRAWING NO.	TITLE
142	JDF-1-4-3/31	SECTION NO.10-CONCRETE OUTLINE,PLANS ELEVATIONS AND SECTIONS
143	JDF-1-4-3/32	SECTION NO.10-LOWER CHANNEL- REINF.I PLANS AND ELEVATIONS
144	JDF-1-4-3/33	SECTION NO.10-LOWER CHANNEL- REINF.II SECTIONS
145	JDF-1-4-3/34	SECTION NO.10-UPPER CHANNEL- REINF. PLAN ELEVATION AND SECTIONS
146	JDF-1-4-3/35	SECTION NO.11-CONCRETE OUTLINE,PLANS ELEVATIONS AND SECTIONS
147	JDF-1-4-3/36	SECTION NO.11-LOWER CHANNEL- REINF.I PLANS AND ELEVATION
148	JDF-1-4-3/37	SECTION NO.11-LOWER CHANNEL- REINF.II SECTIONS
149	JDF-1-4-3/38	SECTION NO.11-LOWER CHANNEL- REINF.III SECTIONS
150	JDF-1-4-3/39	SECTION NO.11-UPPER CHANNEL- REINF. PLAN ELEVATION AND SECTIONS
151	JDF-1-4-3/40	SECTION NO.12-CONCRETE OUTLINE,PLANS ELEVATIONS AND SECTIONS
152	JDF-1-4-3/41	SECTION NO.12-LOWER CHANNEL- REINF.I PLANS AND SECTIONS
153	JDF-1-4-3/42	SECTION NO.12-LOWER CHANNEL- REINF.II SECTIONS
154	JDF-1-4-3/43	SECTION NO.12-LOWER CHANNEL- REINF.III SECTIONS
155	JDF-1-4-3/44	SECTION NO.12-UPPER CHANNEL- REINF. PLAN ELEVATION AND SECTIONS
156	JDF-1-4-3/45	SECTION NOS.13 AND 14-CONCRETE OUTLINE,PLANS ELEVATIONS AND SECTIONS
157	JDF-1-4-3/46	SECTION NO.13 - REINFORCEMENT PLAN,ELEVATION,AND SECTIONS
158	JDF-1-4-3/47	SECTION NO.14 - REINFORCEMENT PLAN,ELEVATION,AND SECTIONS
159	JDF-1-4-3/48	WEIRS 156 THRU 171, 248 CONCRETE OUTLINES
160	JDF-1-4-3/49	WEIRS 172 THRU 247;249 THRU 252 CONCRETE OUTLINES
161	JDF-1-4-3/50	WEIRS 253 THRU 267 CONCRETE OUTLINE
162	JDF-1-4-3/51	WEIRS 156 THRU 171,248 REINFORCEMENT ELEVATIONS AND SECTIONS
163	JDF-1-4-3/52	WEIRS 172 THRU 247,249 THRU 252 - REINF. ELEVATIONS AND SECTIONS
164	JDF-1-4-3/53	WEIRS 253 THRU 266 REINFORCEMENT ELEVATIONS AND SECTIONS
165	JDF-1-4-3/54	WEIR 267 REINFORCEMENT ELEVATION AND SECTIONS
166	JDF-1-4-3/55	DIFFUSION CHAMBERS 2 THRU 16 DETAILS
167	JDF-1-4-3/56	WATER STOPS
22	JDD-1-4-2/57	NON-OVERFLOW DAM BETWEEN POWERHOUSE AND SPILLWAY PLAN
3	JDF-1-5-3/7	EXISTING GENERAL LAYOUT PLAN
4	JDF-1-5-3/8	EXISTING GENERAL LAYOUT ELEVATION AND SECTIONS
5	JDF-1-5-3/9	EXISTING WEIRS 194 & 249 THRU 252 CONCRETE OUTLINE MODIFICATIONS
6	JDF-1-5-3/10	EXISTING WEIRS 253 THRU 267 CONCRETE OUTLINE MODIFICATIONS
7	JDF-1-5-3/11	MODIFIED SECTIONS 10 - 14 PLAN AND SECTION
8	JDF-1-5-3/12	MODIFIED SECTIONS 10 - 14 TYPICAL WALL PLAN AND TABLE
9	JDF-1-5-3/13	MODIFIED WALLS PLANS AND SECTION I
10	JDF-1-5-3/14	MODIFIED WALLS PLANS AND SECTION II
11	JDF-1-5-3/15	MODIFIED WALLS PLANS AND SECTION III
12	JDF-1-5-3/16	MODIFIED WALLS WALKWAY PLAN & DETAILS
13	JDF-1-5-3/17	MISCELLANEOUS METALS
13.1	JDF-1-5-3/18	WEIRS 210 & 248 - COUNTING FACILITIES
	JDF-2-9/2	UPPER DIFFUSER MODIFICATION
173	JDF-1-5-3/1	DIFFUSER GRATING, CABLE TRENCH AND MISCELLANEOUS METALS,DETAILS
174	JDF-1-5-3/2	HANDRAIL AND FISH BARRIER DETAILS
177	JDF-1-5-3/5	COUNTING STATION SCREENS AND GATE
178	JDF-1-5-3/6	STAFF GAGES
67	JDD-1-4-2/92	MONOLITH 13 PLAN,ELEVATION AND SECTIONS
68	JDD-1-4-2/93	MONOLITH 13 FISH LADDER EXIT PLAN,ELEVATION AND SECTION
14	JDF-1-3-4/25	MODIFIED WALLS GENERAL ARRANGEMENT - MECHANICAL
15	JDF-1-3-4/26	MODIFIED WALLS PLAN AND ELEVATIONS - MECHANICAL
16	JDF-1-3-4/27	MODIFIED WALLS DETAILS 1 - MECHANICAL
17	JDF-1-3-4/28	MODIFIED WALLS DETAILS 2 - MECHANICAL
18	JDF-1-3-4/29	MODIFIED WALLS DETAILS 3 - MECHANICAL
-37	JDD-1-6-13/42	SOUTH NON-OVERFLOW DAM, POWER AND LIGHTING SYSTEMS

US Army Corps of Engineers
Portland District

Revision	Date	Description	By

Designed by: J. HURT
Date: 08 AUGUST 2002
Drawn by: J. VANDEGRIFT
CADD File Name: JDS001F18C01.DGN
Checked by: M. HANSON
Technical Manager: J. HURT
Submitted by: DONALD R. CHAMBERS, P.E. Chief, Structural & Arch. Design

U.S. ARMY ENGINEER DISTRICT
CORPS OF ENGINEERS
PORTLAND, OREGON

COLUMBIA RIVER — OREGON - WASHINGTON
JOHN DAY LOCK AND DAM
SOUTH SHORE FISH LADDER
FISH LADDER IMPROVEMENTS
STRUCTURAL — WEIR RECONSTRUCTION

GENERAL STRUCTURAL NOTES

DRAWING STATUS: FINAL

DRAWING NO. JDF-2-18/1

SHEET S1

...\Drawings\jds001f18c01.dgn 08/13/2002 01:01:30 PM

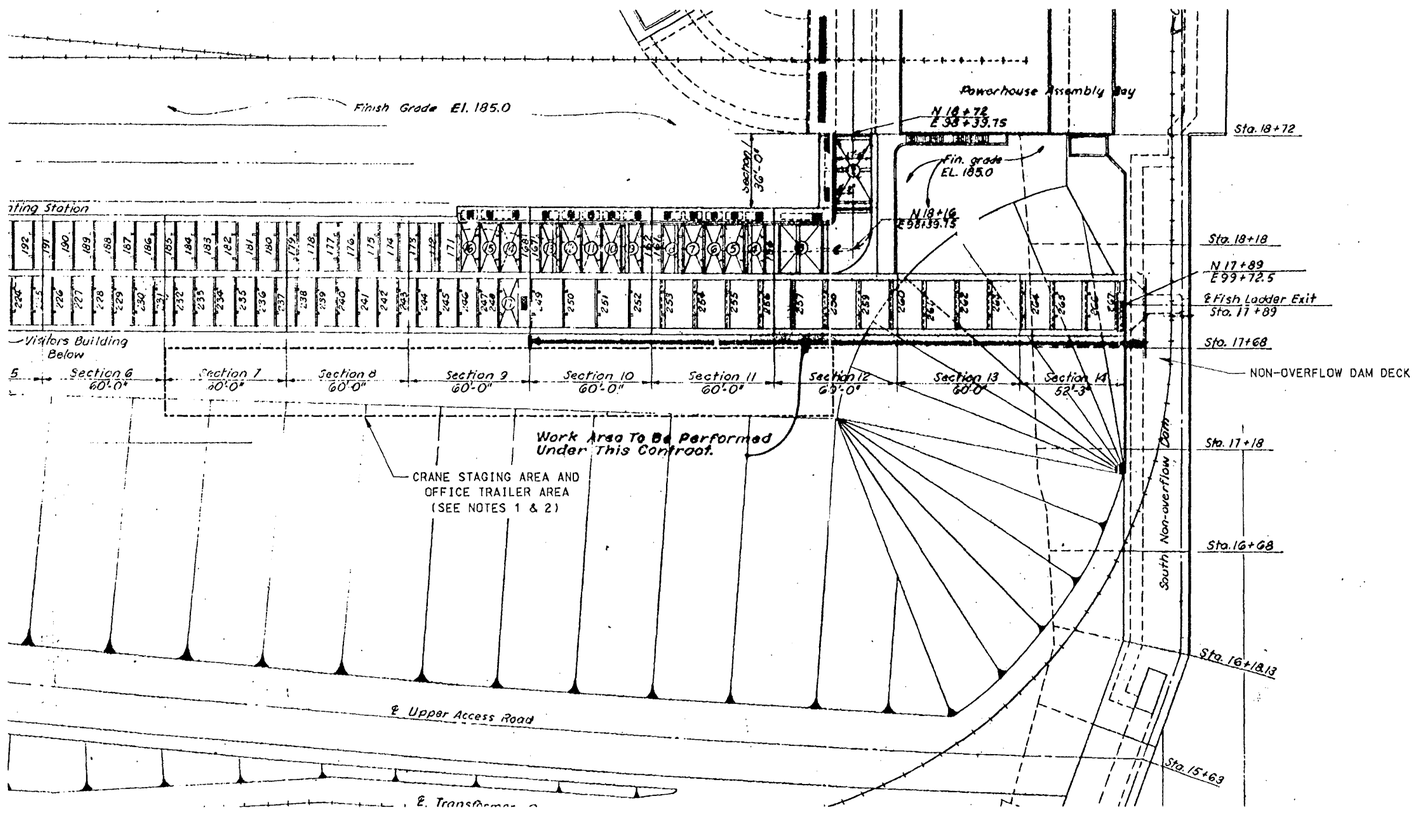

SOUTH SHORE FISH LADDER SITE PLAN

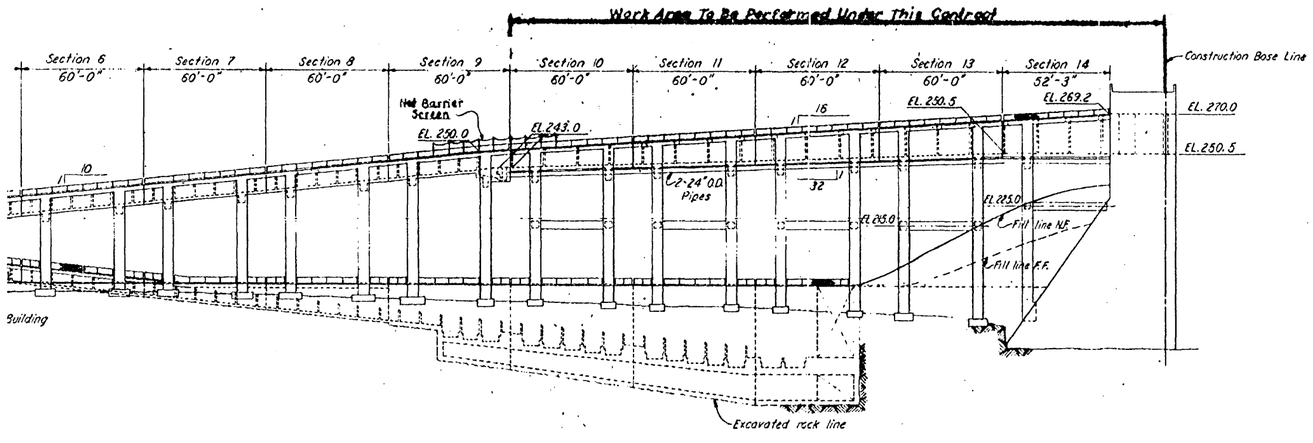

SOUTH SHORE FISH LADDER SECTION

NOTES:

1. THE CONTRACTOR SHALL NOT BE ALLOWED TO OPERATE A CRANE ON THE NON-OVERFLOW DAM DECK. ALL CRANES SHALL BE LOCATED ON THE ROADWAY BELOW THE FISH LADDER. SMALL BOOM TRUCKS OR CONCRETE PUMP TRUCKS WILL BE ALLOWED TO BE LOCATED ON THE NON-OVERFLOW DAM DECK FOR SHORT PERIODS OF TIME. THE CONTRACTOR SHALL COORDINATE WITH THE GOVERNMENT FOR DECK ACCESS.
2. THE CONTRACTOR SHALL SUBMIT TO THE GOVERNMENT FOR APPROVAL A DETAILED WORK PLAN AND CONSTRUCTION SCHEDULE WHICH WILL INCLUDE THE METHODS AND EQUIPMENT USED TO PERFORM THE WORK.
3. ALL PERTINENT EXISTING DIMENSIONS AND ELEVATIONS SHALL BE FIELD VERIFIED BY THE CONTRACTOR PRIOR TO CONSTRUCTION.

SCALE: 1" = 60'

60' 0 60'

US Army Corps of Engineers
Portland District

Revision	Date	Description	By

Designed by: J. HURT
Date: 08 AUGUST 2002
Drawn by: J. VANDEGRIFT
CADD File Name: JDS002F18C01.DGN
Checked by: M. HANSON
Technical Manager: J. HURT
Submitted by: DONALD R. CHAMBERS, P.E. Chief, Structural & Arch. Design

U.S. ARMY ENGINEER DISTRICT
CORPS OF ENGINEERS
PORTLAND, OREGON

COLUMBIA RIVER — OREGON – WASHINGTON
JOHN DAY LOCK AND DAM
SOUTH SHORE FISH LADDER
FISH LADDER IMPROVEMENTS
WEIR RECONSTRUCTION
STRUCTURAL

SITE PLAN AND SECTION

DRAWING STATUS: FINAL

DRAWING NO. JDF-2-18/2

SHEET S2

...\Drawings\jds002f18c01.dgn 06/13/2002 01:02:09 PM

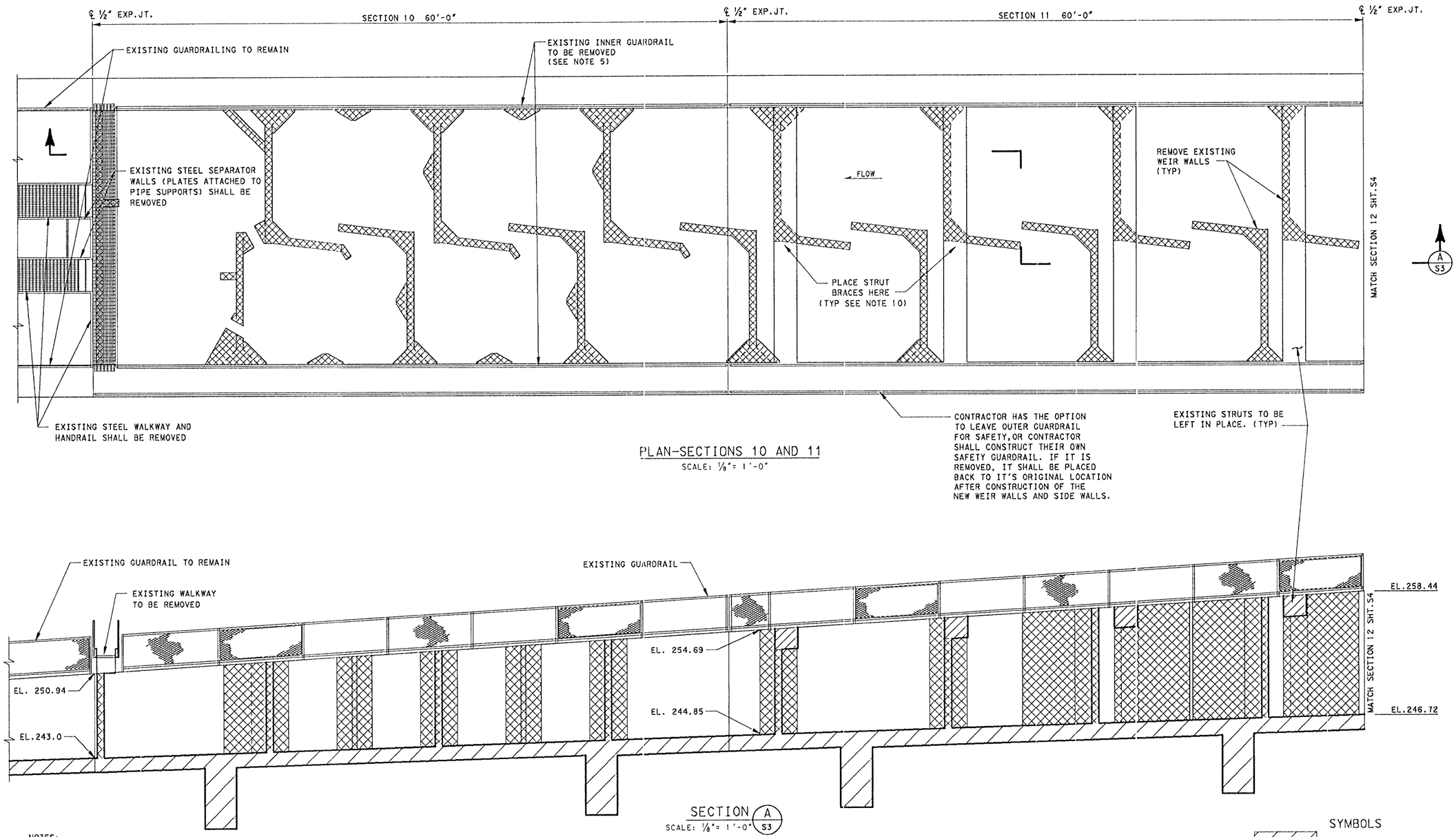

PLAN-SECTIONS 10 AND 11

SCALE: ⅛"= 1'-0"

SECTION A S3

SCALE: ⅛"= 1'-0"

NOTES:

1. ALL EXISTING WEIR AND OTHER CONCRETE PIECES WITHIN SECTIONS 10,11,12,13,AND 14 OF THE EXISTING FISH LADDER STRUCTURE, EXCEPT FOR THE EXISTING STRUTS, SHALL BE REMOVED. THE EXISTING STRUTS SHALL BE LEFT IN PLACE. EXISTING REINFORCING STEEL IN THE EXISTING SLAB AND WALLS SHALL NOT BE REMOVED OR DAMAGED.
2. EACH EXISTING CONCRETE WEIR, THE EXISTING WALKWAY AND OTHER CONCRETE PIECES SHALL BE SAW OR WIRE CUT FROM THE EXISTING FISH LADDER FLOOR, WALLS, AND STRUTS, AND THEN LIFTED OUT OF THE LADDER STRUCTURE. THE CONTRACTOR SHALL NOT BE ALLOWED TO BREAK UP THE SAW CUT PIECES INSIDE THE LADDER STRUCTURE. NO LARGE TRACKED EQUIPMENT SHALL BE ALLOWED WITHIN THE LADDER STRUCTURE. IF THE CONTRACTOR WISHES TO USE SMALL PIECES OF EQUIPMENT SUCH AS MAN LIFTS, THE CONTRACTOR SHALL SUBMIT THE EQUIPMENT'S WEIGHT, WHEEL SPACING, AND OTHER PERTINENT INFORMATION TO THE GOVERNMENT FOR APPROVAL. AFTER THE EXISTING CONCRETE PIECES HAVE BEEN SAW OR WIRE CUT FROM THE MAIN FISH LADDER STRUCTURE,THE CONCRETE IN THE AREA AROUND THE EXISTING REINFORCING BARS SHALL BE SAW CUT AND BROKEN BACK (SEE DETAIL 1/S5) TO A MINIMUM DEPTH OF 2" PAST THE ORIGINAL CONCRETE SURFACE, THIS WILL ALLOW ACCESS TO THE REINFORCING BARS,WHICH THE CONTRACTOR SHALL BURN BACK TO A DEPTH OF 2 INCHES. THIS AREA SHALL THEN BE PATCHED USING A PATCHING MATERIAL CALLED OUT IN THE SPECIFICATIONS.
3. SEE INFORMATIONAL DRAWINGS FOR EXISTING FEATURES OF THE FISH LADDER.
4. SEE MECHANICAL INFORMATIONAL DRAWINGS FOR EXISTING MECHANICAL EQUIPMENT.
5. THE CONTRACTOR SHALL REMOVE ALL EXISTING INNER GUARDRAIL FOR THE PLACEMENT OF THE NEW CONCRETE SIDE WALL. EMBEDDED ANGLE SHALL BE REMOVED AS SHOWN IN DETAIL 3 SHEET S13.
6. THERE ARE NO EXISTING STRUTS IN SECTION 10.
7. REMOVE ALL EXISTING NETTING THAT COVERS THE EXISTING WEIRS. SAVE THIS NETTING AND PLACE BACK OVER THE TOP OF THE NEW WEIR WALLS.
8. MANY OF THE EXISTING WEIRS ARE COVERED WITH RUBBER SHEETING, WHICH WILL HAVE TO BE REMOVED PRIOR TO REMOVING THE WEIRS. EXISTING WEIR WALL 5 (SEE INFORMATIONAL DWGS.JDF-1-5-3/11 AND JDF-1-5-3/12), HAS TWO SLOTS CUT INTO IT W/2 MECHANICAL GATES AND A SMALL HOIST ASSEMBLY THAT IS NOT SHOWN ON DRAWINGS, THESE HOISTS SHALL BE REMOVED AND HANDED OVER TO THE PROJECT IF THE PROJECT HAS NOT ALREADY REMOVED THEM.
9. ALL FEATURES AND MATERIAL REMOVED FROM THE FISH LADDER STRUCTURE, EXCEPT THAT WHICH IS CALLED OUT TO BE REINSTALLED, SHALL BECOME THE PROPERTY OF THE CONTRACTOR U.N.O.
10. EACH EXISTING STRUT SHALL BE REQUIRED TO BE SUPPORTED/BRACED IN THE VERTICAL DIRECTION USING A COLUMN WITH A MINIMAL AXIAL CAPACITY OF 30 KIPS. EACH COLUMN BRACE SHALL BE PLACED AS CLOSE AS POSSIBLE TO THE EXISTING WEIR WALL THAT IS TO BE REMOVED AND SHALL BE IN PLACE BEFORE THE EXISTING WEIR WALL IS REMOVED. THESE STRUT BRACES SHALL REMAIN IN PLACE THROUGHOUT THE CONSTRUCTION PERIOD AND SHALL BE REMOVED ONLY AFTER ALL OTHER CONSTRUCTION IS COMPLETE. WHILE REMOVING THE BRACES, THE CONTRACTOR SHALL NOT BE ALLOWED DIRECTLY UNDERNEATH THE STRUT. AT NO TIME SHALL ANY PERSONNEL BE ALLOWED UNDERNEATH AN UNSUPPORTED STRUT. NO EQUIPMENT, PERSONNEL, OR OTHER LOADING SHALL BE ALLOWED ON TOP OF AN EXISTING STRUT AFTER THE EXISTING WEIR WALL HAS BEEN REMOVED FROM UNDERNEATH THE STRUT.

SYMBOLS

EXISTING CONCRETE

CONCRETE TO BE REMOVED

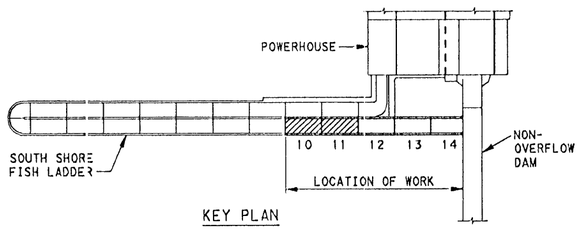

KEY PLAN

US Army Corps of Engineers
Portland District

Revision	Date	Description	By

Designed by: J. HURT
Date: 08 AUGUST 2002
Drawn by: J. VANDEGRIFT
CADD File Name: JDS003F18C01.DGN
Checked by: M. HANSON
Technical Manager: J. HURT
Submitted by: DONALD R. CHAMBERS, P.E. Chief, Structural & Arch. Design

U.S. ARMY ENGINEER DISTRICT
CORPS OF ENGINEERS
PORTLAND, OREGON

COLUMBIA RIVER — OREGON - WASHINGTON
JOHN DAY LOCK AND DAM
SOUTH SHORE FISH LADDER
FISH LADDER IMPROVEMENTS
STRUCTURAL — WEIR RECONSTRUCTION

EXISTING PLAN AND SECTION W/DEMOLITION I

DRAWING STATUS: FINAL

DRAWING NO. JDF-2-18/3

SHEET S3

..\Drawings\jds003f18c01.dgn 08/13/2002 01:02:50 PM

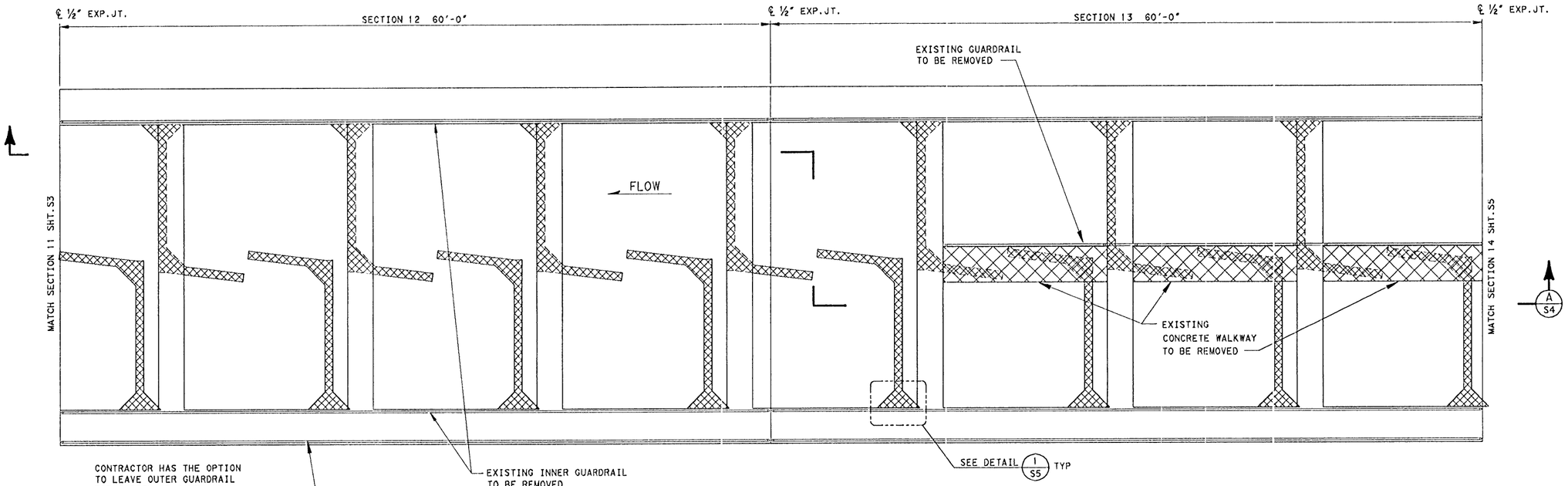

PLAN-SECTIONS 12 AND 13

SCALE: ⅛"= 1'-0"

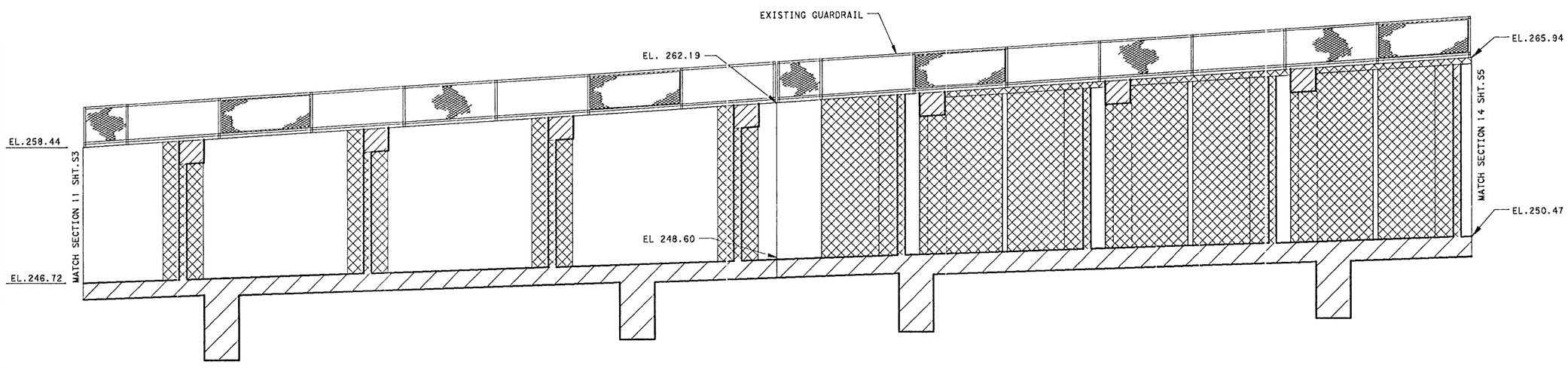

SECTION A S4

SCALE: ⅛"= 1'-0"

NOTES:

1. SEE NOTES ON SHEET S3.
2. SOME OF THE EXISTING STEEL FEATURES THAT ARE TO BE REMOVED MAY HAVE LEAD BASED PAINT OR PRIMER ON THEM. ALL AREAS WHERE PAINT MAY BE DISTURBED IN THE PROCESS OF REMOVAL OF THE FEATURES SHALL HAVE THE PAINT REMOVED PRIOR TO ANY SCRAPING, CUTTING, GRINDING, BLASTING, SANDING, POWER TOOL CLEANING, HEAT GUN OR ANY OTHER HOT WORK THAT MAY GENERATE LEAD DUST OR FUMES. RULES TO SAFELY MANAGE LEAD IN CONSTRUCTION ARE FOUND IN 29 CFR 1926.62. ANY LEAD BASED PAINT REMOVAL TECHNIQUES SHALL BE SUBMITTED TO THE GOVERNMENT FOR APPROVAL. ANY LEAD BASED PAINT MATERIAL SHALL NOT BE ALLOWED TO ENTER THE RIVER AND SHALL BE DISPOSED OF IN ACCORDANCE WITH SPECIFICATION SECTION 01355.

SYMBOLS

EXISTING CONCRETE

CONCRETE TO BE REMOVED

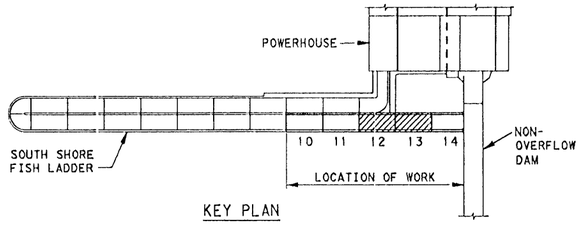

KEY PLAN

US Army Corps of Engineers
Portland District

Revision	Date	Description	By

Designed by: J. HURT
Date: 08 AUGUST 2002
Drawn by: J. VANDEGRIFT
CADD File Name: JDS004F18C01.DGN
Checked by: M. HANSON
Technical Manager: J. HURT
Submitted by: DONALD R. CHAMBERS, P.E. Chief, Structural & Arch. Design

U.S. ARMY ENGINEER DISTRICT
CORPS OF ENGINEERS
PORTLAND, OREGON

COLUMBIA RIVER — OREGON - WASHINGTON
JOHN DAY LOCK AND DAM
SOUTH SHORE FISH LADDER
FISH LADDER IMPROVEMENTS
STRUCTURAL — WEIR RECONSTRUCTION
EXISTING PLAN AND SECTION W/DEMOLITION II

DRAWING STATUS: FINAL

DRAWING NO. JDF-2-18/4

SHEET S4

...\Drawings\jds004f18c01.dgn 08/13/2002 01:03:32 PM

NOTE:

1. EXISTING STAIRWAYS 1&4 SHALL BE LEFT IN PLACE. EXISTING STAIRWAY 3 SHALL BE REMOVED, EXISTING STAIRWAY 2 MAY BE REMOVED AT THE CONTRACTOR'S DISCRETION IF IT INTERFERES WITH REMOVAL OR REPLACEMENT OF WEIR WALLS OR MECHANICAL EQUIPMENT. IF IT IS REMOVED, IT SHALL BE PLACED BACK TO IT'S ORIGINAL LOCATION AND SHALL NOT BE DAMAGED.
2. BURN BACK ALL EXPOSED REBAR TO A MINIMUM DEPTH OF 2" AND PATCH USING THE MATERIAL CALLED OUT IN THE SPECIFICATIONS.
3. SEE NOTES ON SHEET S3.

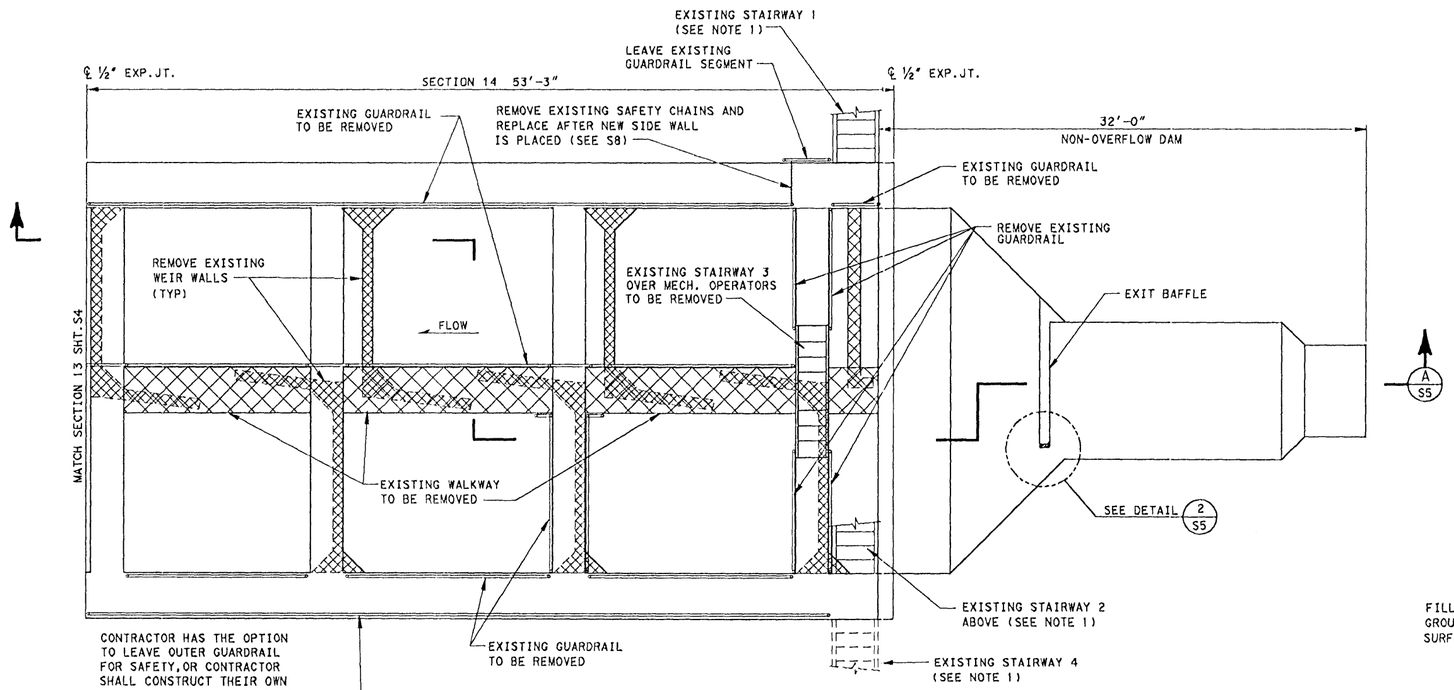

PLAN-SECTION 14
SCALE: ⅛"= 1'-0"

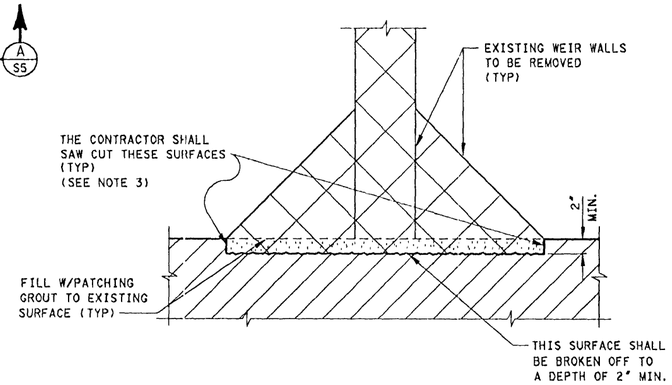

TYPICAL WALL REMOVAL DETAIL 1 S4
SCALE: ¾"= 1'-0"

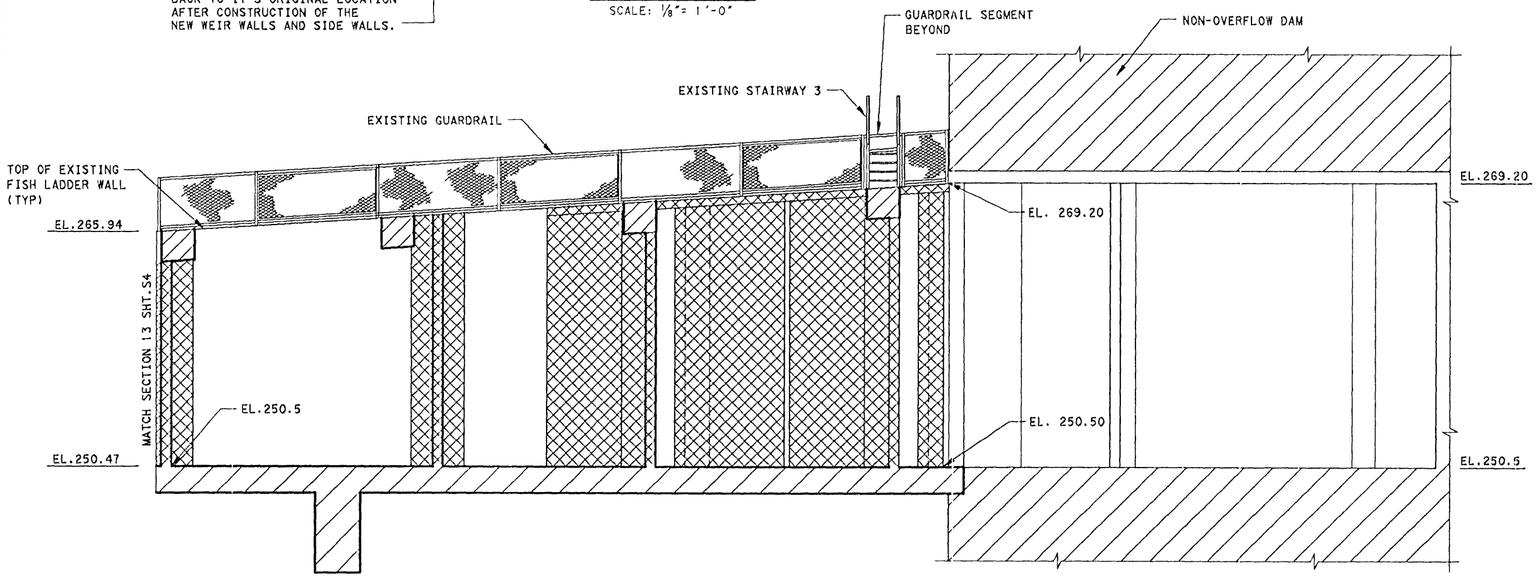

SECTION A S5
SCALE: ⅛"= 1'-0"

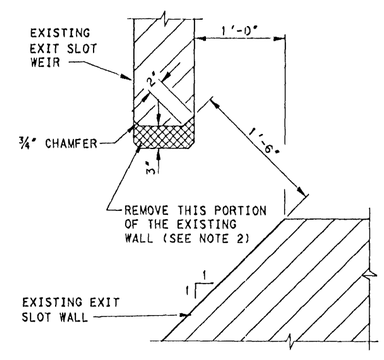

DETAIL 2 S5
SCALE: ¾"= 1'-0"

SYMBOLS

EXISTING CONCRETE

CONCRETE TO BE REMOVED

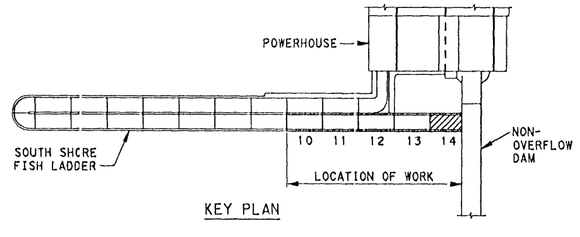

KEY PLAN

US Army Corps of Engineers
Portland District

Revision	Date	Description	By

Designed by: J. HURT
Date: 08 AUGUST 2002
Drawn by: J. VANDEGRIFT
CADD File Name: JDS005F18C01.DGN
Checked by: M. HANSON
Technical Manager: J. HURT
Submitted by: DONALD R. CHAMBERS, P.E. Chief, Structural & Arch. Design

U.S. ARMY ENGINEER DISTRICT
CORPS OF ENGINEERS
PORTLAND, OREGON

COLUMBIA RIVER — OREGON - WASHINGTON
JOHN DAY LOCK AND DAM
SOUTH SHORE FISH LADDER
FISH LADDER IMPROVEMENTS
STRUCTURAL — WEIR RECONSTRUCTION
EXISTING PLAN AND SECTION W/DEMOLITION III

DRAWING STATUS: FINAL

DRAWING NO. JDF-2-18/5

SHEET S5

..\Drawings\jds005f18c01.dgn 08/13/2002 01:04:10 PM

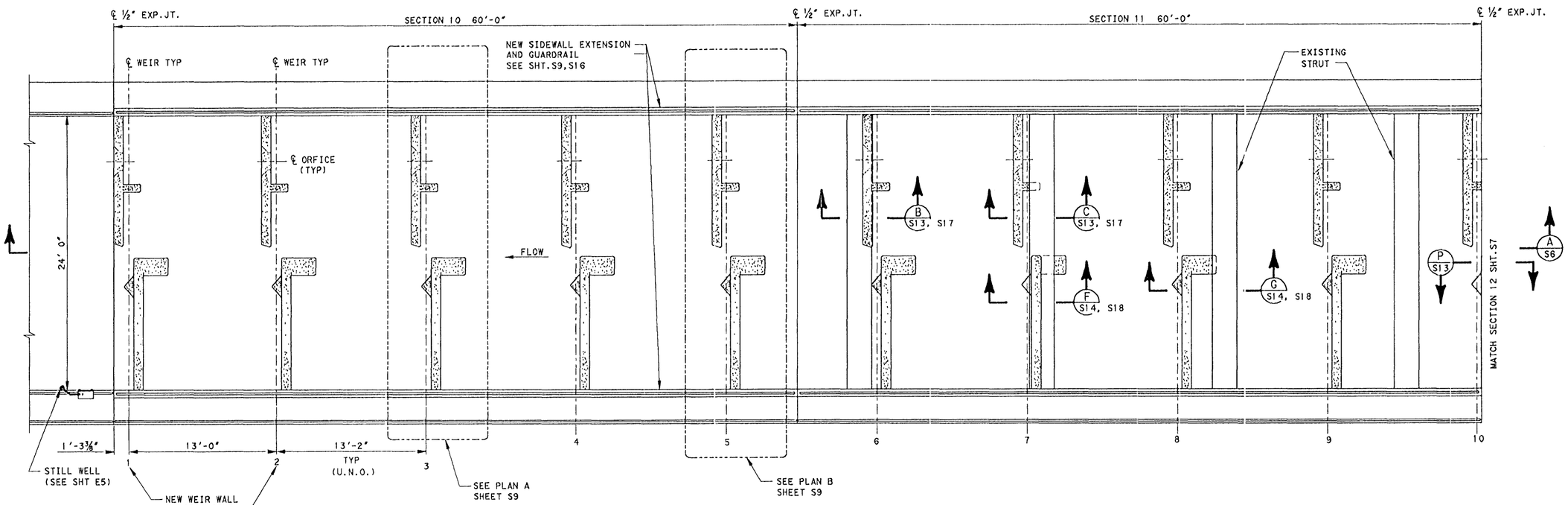

PLAN-NEW WEIRS SECTIONS 10 AND 11

SCALE: ⅛"= 1'-0"

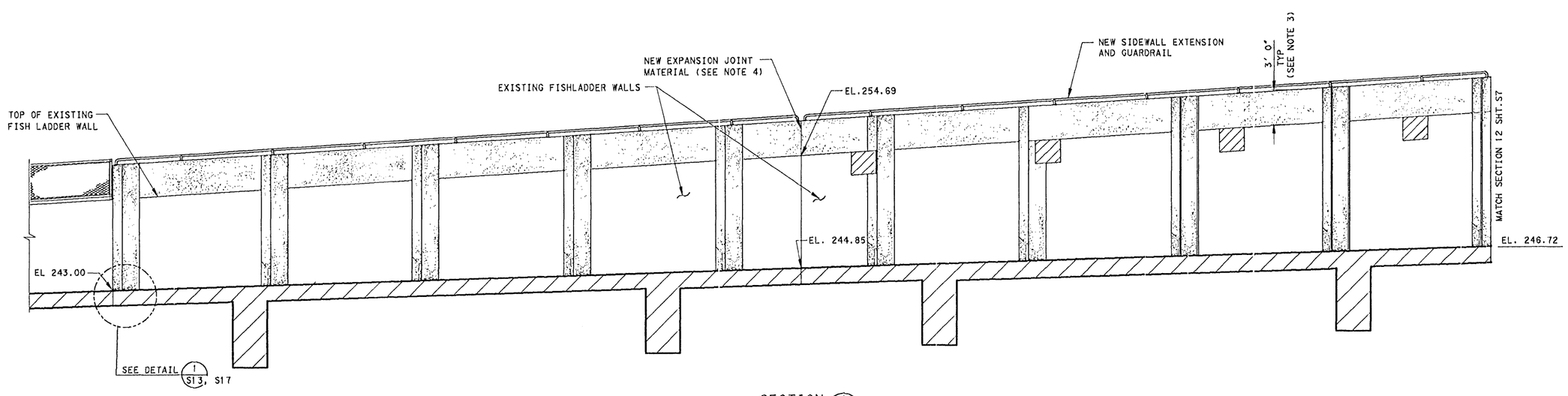

SECTION A S6

SCALE: ⅛"= 1'-0"

NOTES:

1. FOR WEIR DIMENSIONS SEE TABLE 1 AND WEIR PLANS A AND B ON S9.
2. SEE GENERAL NOTES FOR CONCRETE AND REINFORCEMENT REQUIREMENTS.
3. THE TOPS OF THE NEW WEIR WALLS AND SIDEWALL EXTENSION SHALL BE PLACED SO THAT THEY ARE 3' ABOVE THE TOP ELEVATION OF THE EXISTING FISH LADDER SIDE WALLS. THE TOPS OF THE NEW WEIR WALLS SHALL HAVE THE SAME SLOPE AS THE TOP OF THE EXISTING FISH LADDER SIDE WALLS.
4. THE CONTRACTOR SHALL FURNISH & INSTALL PREFORMED JOINT FILLER MATERIAL BETWEEN THE NEW SIDEWALL END SURFACES AT EACH EXPANSION JOINT. THIS EXPANSION JOINT MATERIAL SHALL BE A NON-EXTRUDING RESILIENT JOINT FILLER, BE SATURATED WITH HIGH QUALITY BITUMINIOUS MATERIALS, AND SHALL CONFORM TO ASTM D1751-83.

SYMBOLS

EXISTING CONCRETE IN SECTION

NEW CONCRETE

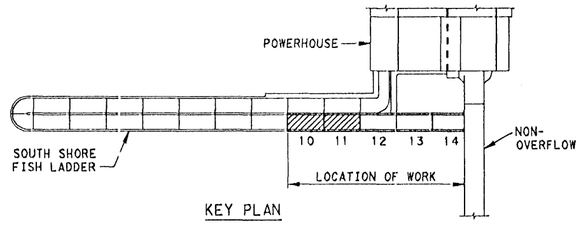

KEY PLAN

US Army Corps of Engineers
Portland District

Revision	Date	Description	By

Designed by: J. HURT
Drawn by: J. VANDEGRIFT
Checked by: M. HANSON
Date: 08 AUGUST 2002
CADD File Name: JDS006F18C01.DGN
Technical Manager: J. HURT
Submitted by: DONALD R. CHAMBERS, P.E. Chief, Structural & Arch. Design

U.S. ARMY ENGINEER DISTRICT
CORPS OF ENGINEERS
PORTLAND, OREGON

COLUMBIA RIVER — OREGON - WASHINGTON
JOHN DAY LOCK AND DAM
SOUTH SHORE FISH LADDER
FISH LADDER IMPROVEMENTS
STRUCTURAL — WEIR RECONSTRUCTION
NEW PLAN AND SECTION I

DRAWING STATUS: FINAL

DRAWING NO. JDF-2-18/6

SHEET S6

...\Drawings\jds006f18c01.dgn 08/13/2002 01:04:52 PM

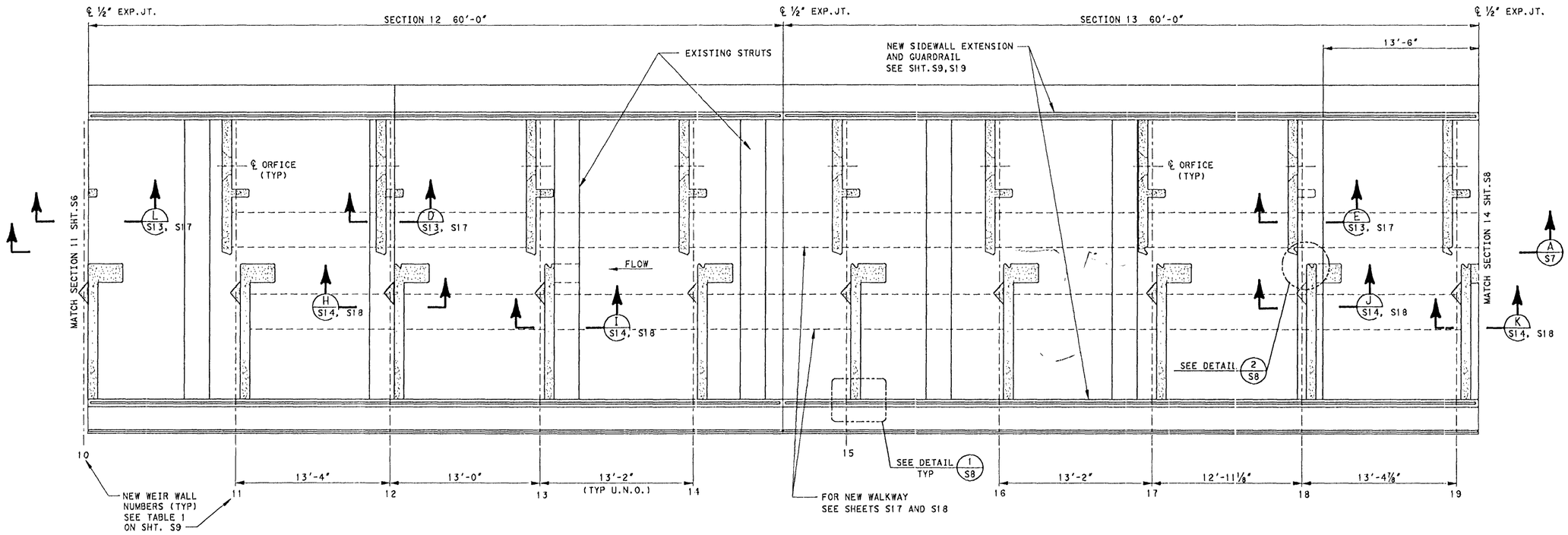

PLAN-NEW WEIRS SECTIONS 12 AND 13

SCALE: ⅛"= 1'-0"

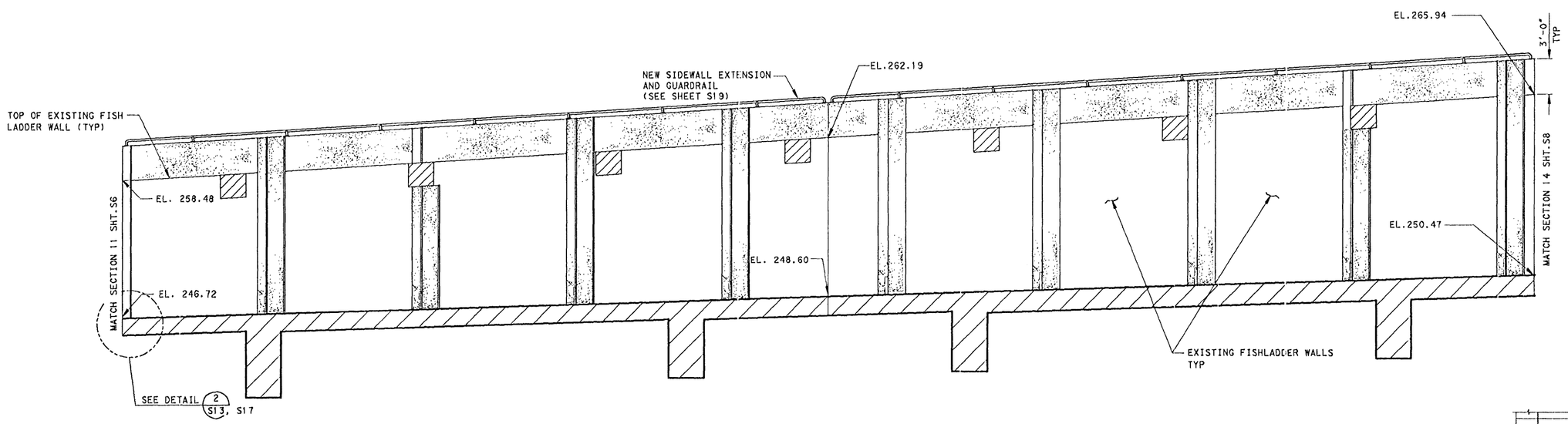

SECTION A S7

SCALE: ⅛"= 1'-0"

SYMBOLS

EXISTING CONCRETE IN SECTION

NEW CONCRETE

NOTE:

1. SEE NOTES ON SHEET S6.

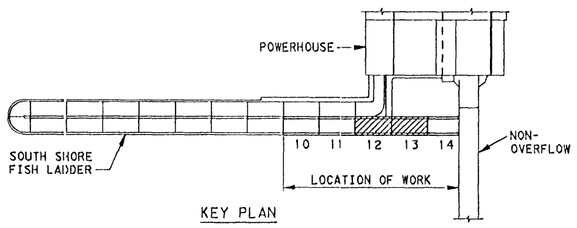

KEY PLAN

US Army Corps of Engineers
Portland District

Revision	Date	Description	By

Designed by: J. HURT
Date: 08 AUGUST 2002
Drawn by: J. VANDEGRIFT
CADD File Name: JDS007F18C01.DGN
Checked by: M. HANSON
Technical Manager: J. HURT
Submitted by: DONALD R. CHAMBERS, P.E. Chief, Structural & Arch. Design

U.S. ARMY ENGINEER DISTRICT CORPS OF ENGINEERS PORTLAND, OREGON

COLUMBIA RIVER — OREGON - WASHINGTON
JOHN DAY LOCK AND DAM
SOUTH SHORE FISH LADDER
FISH LADDER IMPROVEMENTS
STRUCTURAL — WEIR RECONSTRUCTION

NEW PLAN AND SECTION II

DRAWING STATUS: FINAL

DRAWING NO. JDF-2-18/7

SHEET S7

..\Drawings\jds007f18c01.dgn 08/13/2002 01:05:41 PM

NOTES:

1. WHERE THE NEW WEIR WALLS COINCIDE WITH WHERE THE EXISTING WALLS HAVE BEEN REMOVED, THE NEW WALLS SHALL BE CAST AGAINST THE 2" DEEP REMOVED CONCRETE AREA. WHEN THE NEW WEIR WALLS ARE PLACED AGAINST THE EXISTING FISH LADDER WALL SURFACE, THE SURFACE SHALL BE PREPARED AS PER THE SPECIFICATIONS.

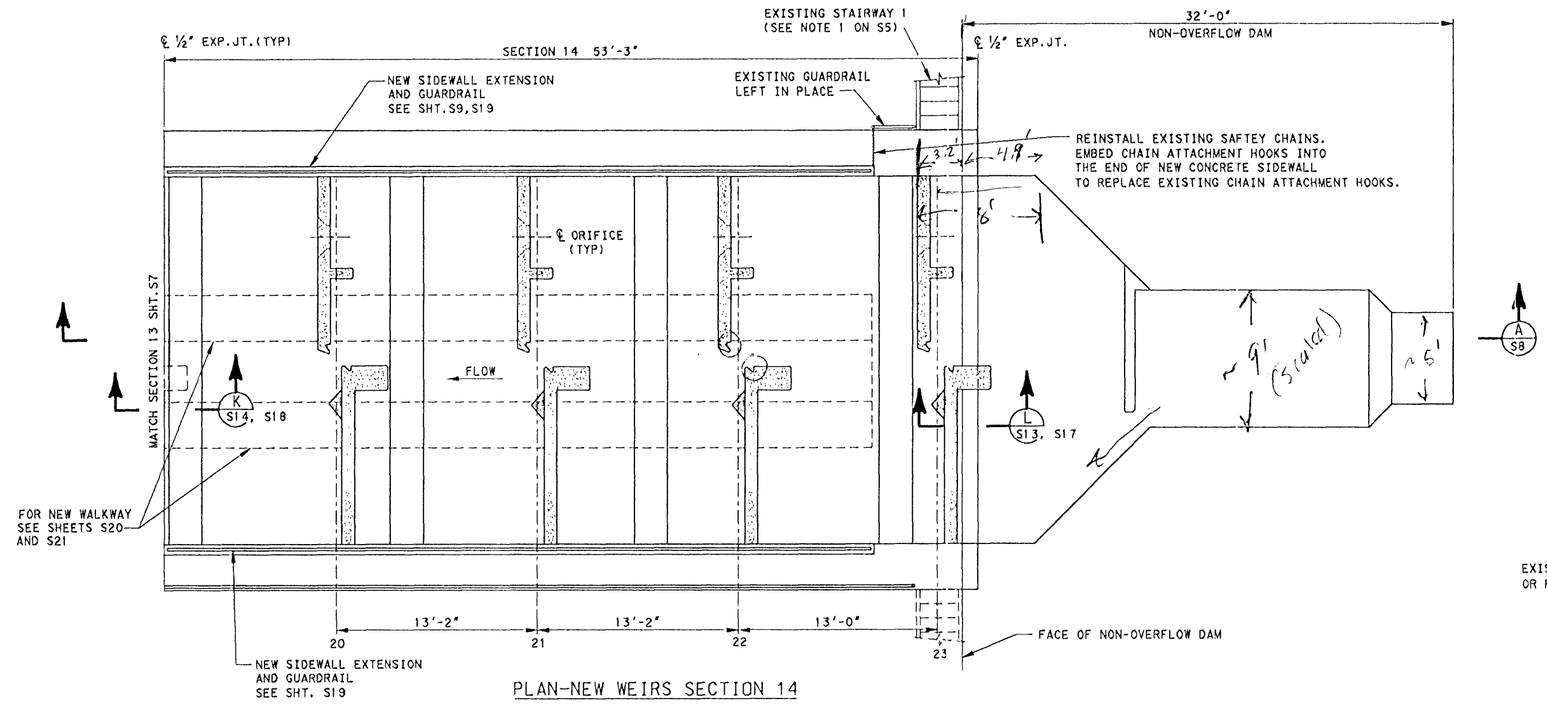

PLAN-NEW WEIRS SECTION 14

SCALE: ⅛"= 1'-0"

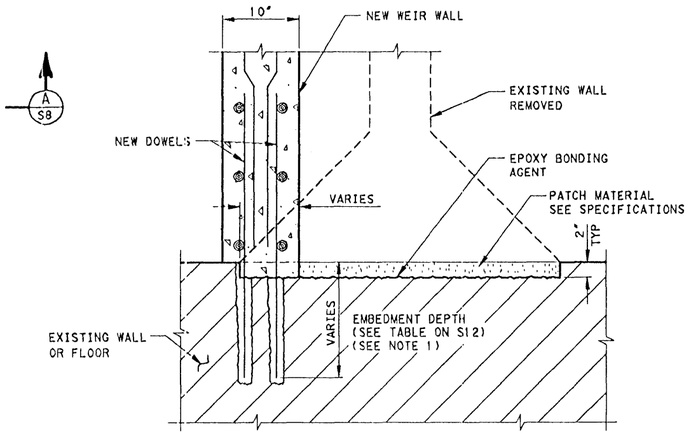

TYPICAL WALL AND FLOOR DETAIL (1/S7)

SCALE: ¾"= 1'-0"

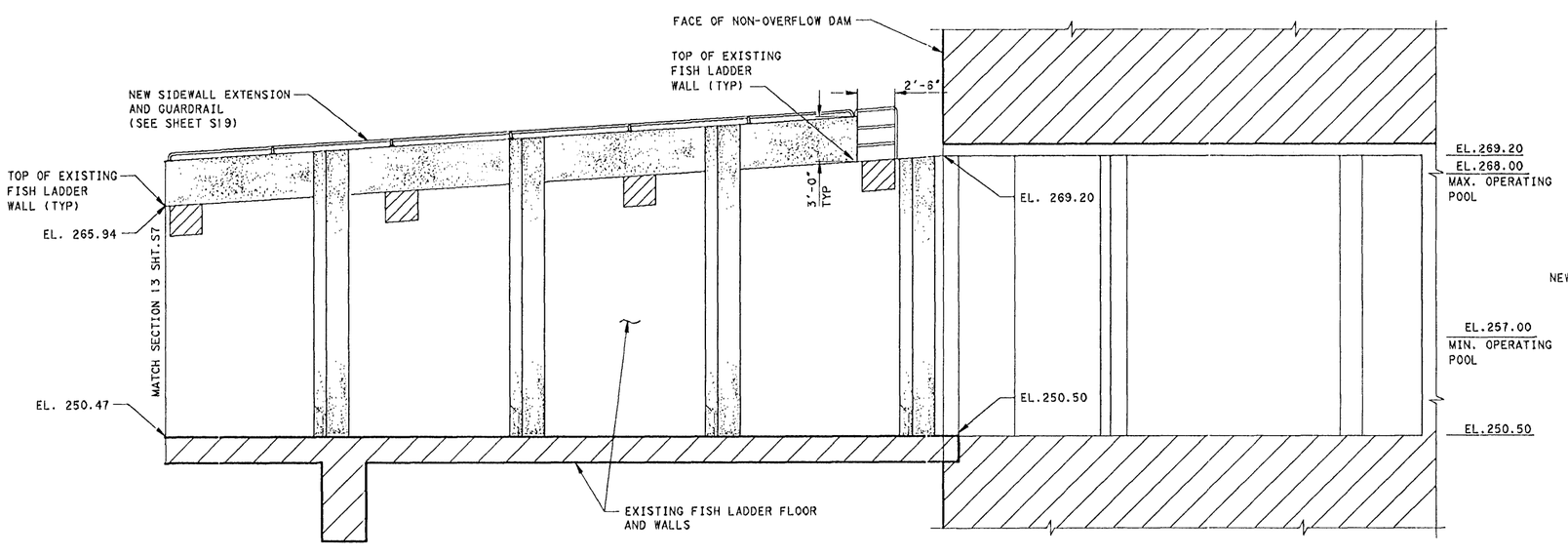

SECTION (A/S8)

SCALE: ⅛"= 1'-0"

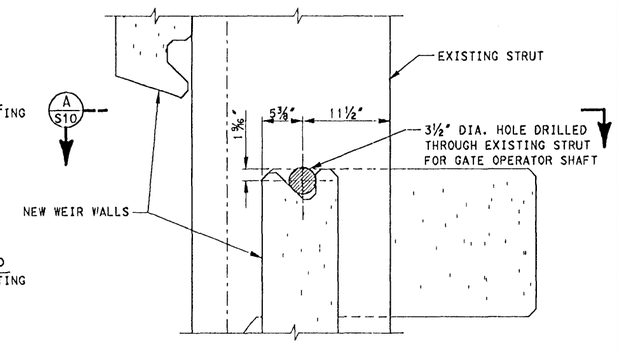

DETAIL (2/S7)

SCALE: ¾"= 1'-0"

SYMBOLS

EXISTING CONCRETE

NEW CONCRETE

NOTE:

1. SEE NOTES ON SHEET S6.

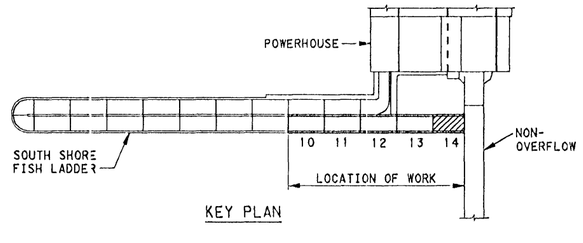

KEY PLAN

US Army Corps of Engineers
Portland District

Revision	Date	Description	By

Designed by: J. HURT
Date: 08 AUGUST 2002
Drawn by: J. VANDEGRIFT
CADD File Name: JDS008f18C01.DGN
Checked by: M. HANSON
Technical Manager: J. HURT
Submitted by: DONALD R. CHAMBERS, P.E. Chief, Structural & Arch. Design

U.S. ARMY ENGINEER DISTRICT
CORPS OF ENGINEERS
PORTLAND, OREGON

COLUMBIA RIVER — OREGON - WASHINGTON
JOHN DAY LOCK AND DAM
SOUTH SHORE FISH LADDER
FISH LADDER IMPROVEMENTS
STRUCTURAL — WEIR RECONSTRUCTION
NEW PLAN AND SECTION III

DRAWING STATUS: FINAL

DRAWING NO. JDF-2-18/8

SHEET S8

..\Drawings\jds008f18c01.dgn 08/13/2002 01:06:23 PM

NOTES:

1. ALL ORIFICE AND SLOT DIMENSIONS SHALL BE WITHIN 1/8" OF THOSE SHOWN.
2. SOUTH WEIRS 12-23 HAVE BLOCKOUTS FOR MECHANICAL GATES. NORTH WEIRS 17-23 ALSO HAVE BLOCKOUTS FOR MECHANICAL GATES. BOTH SOUTH & NORTH WEIRS 1-11 DO NOT HAVE ANY BLOCKOUTS FOR MECHANICAL GATES.
3. THE BLOCKOUTS SHOWN IN DETAILS 4/S9 5/S9 ARE CONTINUOUS FROM THE FLOOR OF THE EXISTING FISH LADDER TO THE TOP OF EACH NEW WEIR WALL.

WEIR NUMBER	WEIR PLAN
1	A
2	A
3	A
4	B
5	B
6	B
7	B
8	B
9	B
10	B
11	B
12	B
13	B
14	B
15	B
16	B
17	B
18	B
19	B
20	B
21	A
22	A
23	A

TABLE 1

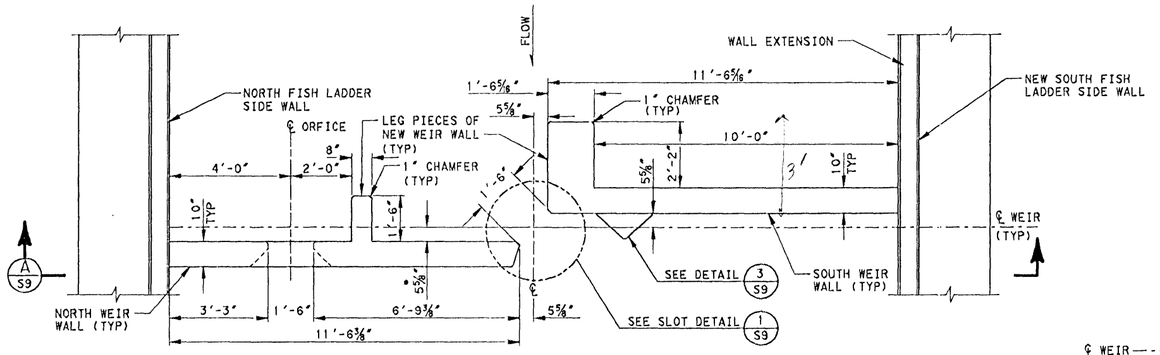

• THIS DIMENSION IS 5 3/8" AT WEIR 1

TYPICAL WEIR PLAN A
(SEE TABLE 1)
SCALE: 1/4" = 1'-0"

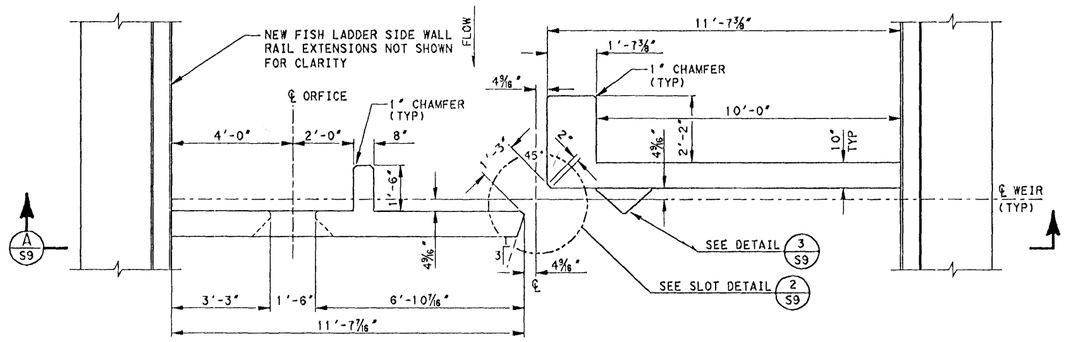

TYPICAL WEIR PLAN B
(SEE TABLE 1)
SCALE: 1/4" = 1'-0"

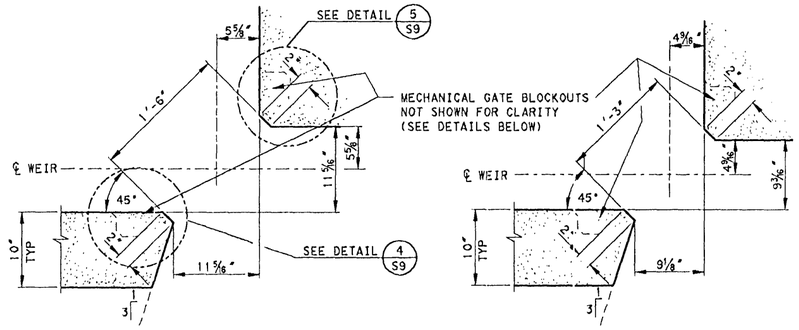

SLOT DETAIL 1/S9
SCALE: 3/4" = 1'-0"
(SEE NOTE 1)

SLOT DETAIL 2/S9
SCALE: 3/4" = 1'-0"
(SEE NOTE 1)

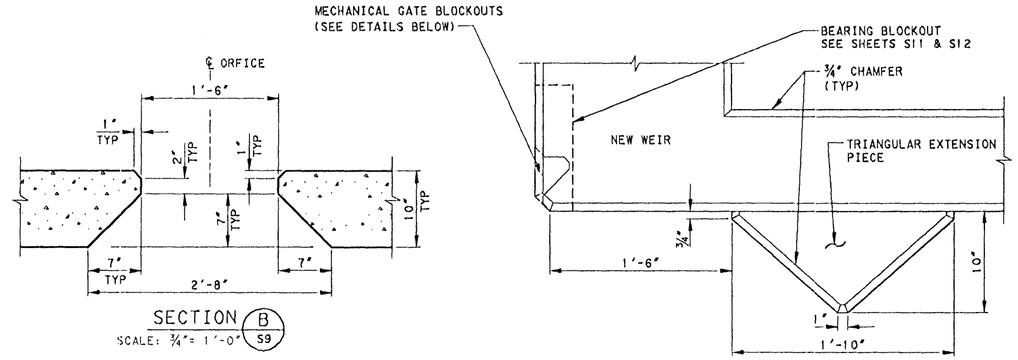

SECTION B/S9
SCALE: 3/4" = 1'-0"

DETAIL 3/S9
SCALE: 3/4" = 1'-0"

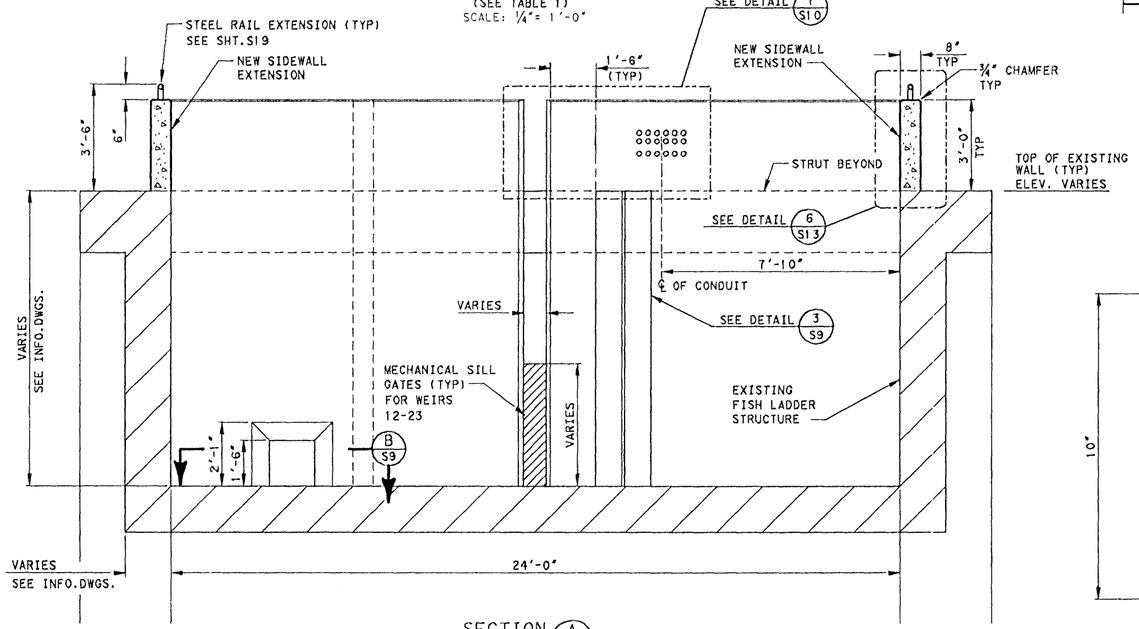

SECTION A/S9
SCALE: 1/4" = 1'-0"

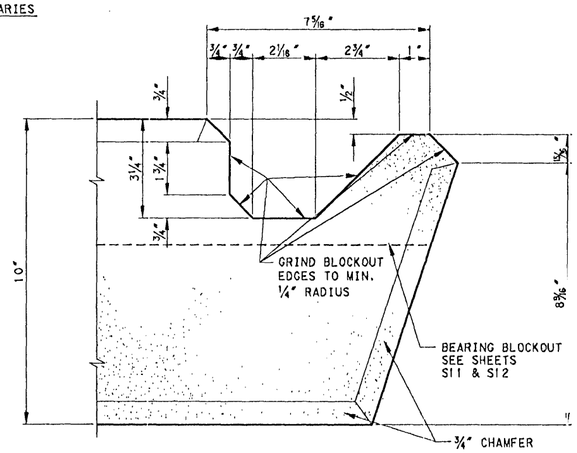

TYPICAL BLOCKOUT FOR WEIRS 17-23

DETAIL 4/S9
SCALE: 3" = 1'-0"

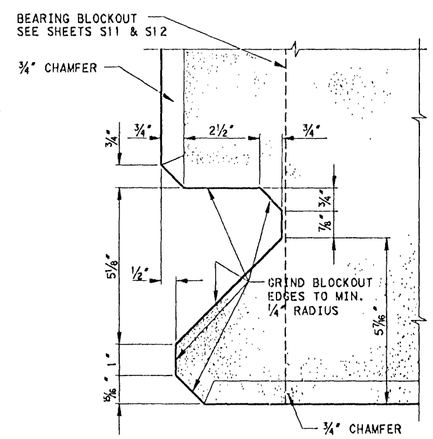

TYPICAL BLOCKOUT FOR WEIRS 12-23

DETAIL 5/S9
SCALE: 3" = 1'-0"

US Army Corps of Engineers
Portland District

Revision	Date	By	Description

Designed by: J. HURT
Date: 08 AUGUST 2002
Drawn by: J. VANDEGRIFT
CADD File Name: JDS009F18C01.DGN
Checked by: M. HANSON
Technical Manager: J. HURT
Submitted by: DONALD R. CHAMBERS, P.E. Chief, Structural & Arch. Design

U.S. ARMY ENGINEER DISTRICT
CORPS OF ENGINEERS
PORTLAND, OREGON

COLUMBIA RIVER — OREGON - WASHINGTON
JOHN DAY LOCK AND DAM
SOUTH SHORE FISH LADDER
FISH LADDER IMPROVEMENTS
STRUCTURAL — WEIR RECONSTRUCTION
NEW WEIR ELEVATIONS SECTION AND DETAILS

DRAWING STATUS: FINAL

DRAWING NO. JDF-2-18/9

SHEET S9

..\Drawings\jds009f18c01.dgn 08/13/2002 01:07:55 PM

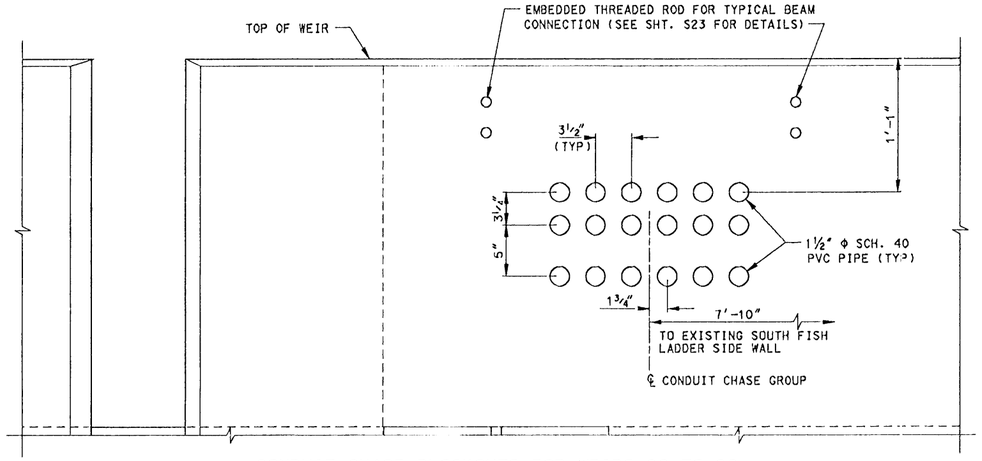

CONDUIT CHASE BLOCKOUTS FOR WEIRS 20 TO 22

SCALE: 1"= 1'-0"

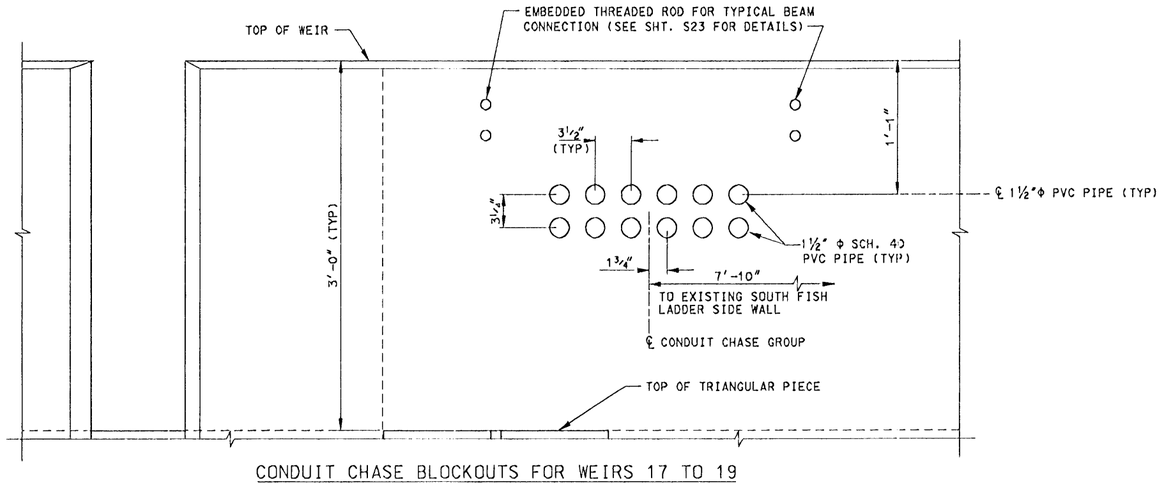

CONDUIT CHASE BLOCKOUTS FOR WEIRS 17 TO 19

SCALE: 1"= 1'-0"

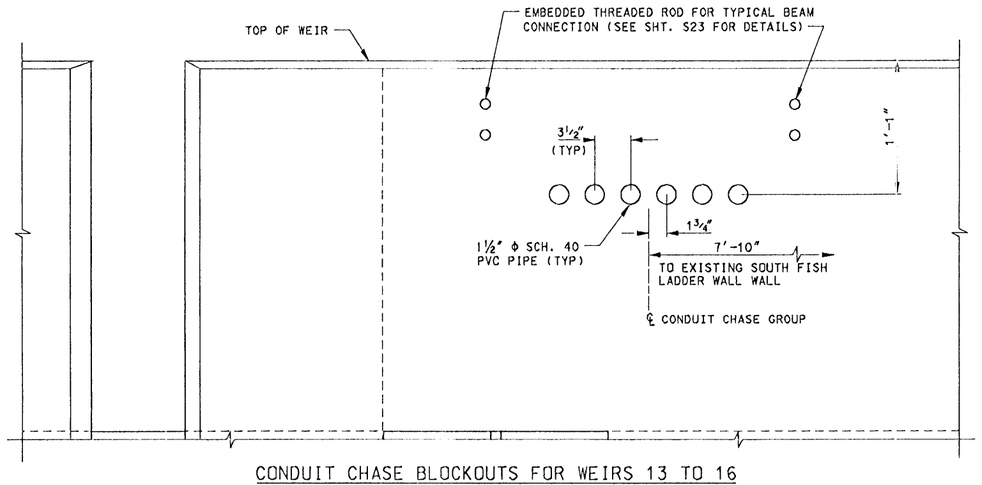

CONDUIT CHASE BLOCKOUTS FOR WEIRS 13 TO 16

DETAIL 7/S9

SCALE: 1"= 1'-0"

NOTES:

1. SEE ELECTRICAL DRAWINGS FOR WIRE RUNNING THROUGH CONDUITS.

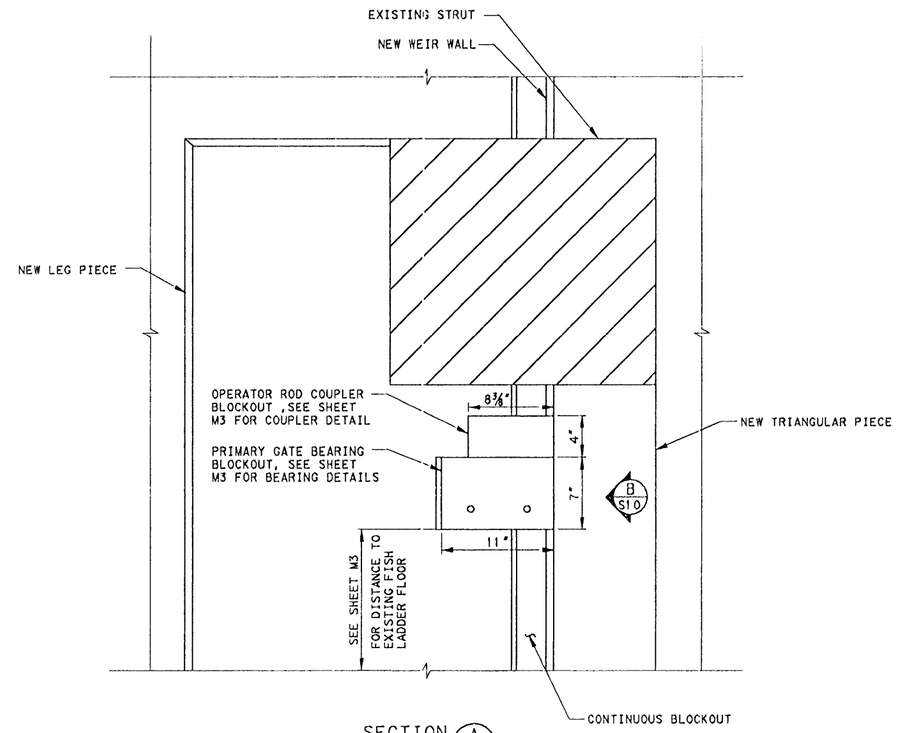

SECTION A/S8

SCALE: 1"= 1'-0"

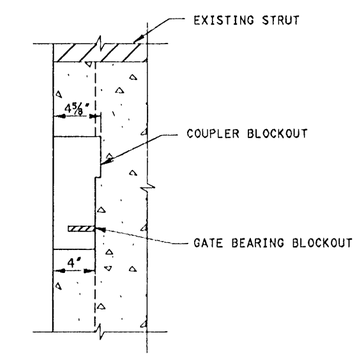

ELEVATION B/S10

SCALE: 1"= 1'-0"

US Army Corps of Engineers
Portland District

Revision	Date	Description	By

Designed by: P. DUTCK
Date: 08 AUGUST 2002
Drawn by: J. VANDEGRIFT
CADD File Name: jds01of18c01.DGN
Checked by: M. HANSON
Technical Manager: J. HURT
Submitted by: DONALD R. CHAMBERS, P.E. Chief, Structural & Arch. Design

U.S. ARMY ENGINEER DISTRICT
CORPS OF ENGINEERS
PORTLAND, OREGON

COLUMBIA RIVER — OREGON - WASHINGTON
JOHN DAY LOCK AND DAM
SOUTH SHORE FISH LADDER
FISH LADDER IMPROVEMENTS
STRUCTURAL — WEIR RECONSTRUCTION

CONDUIT PIPE CHASE DETAILS

DRAWING STATUS:
FINAL

DRAWING NO.
JDF-2-18/10

SHEET
S10

...\drawings\jds01of18c01.dgn 08/13/2002 01:08:36 PM

NOTES:
1. FOR ALL GATE SIZES AND LOCATION SEE MECHANICAL SHEETS M3 & M4. BLOCKOUT FOR ACTUAL GATES SHALL BE ½" LARGER THAN GATE SIZE AROUND THE EDGES OF GATES. ALL BEARING BLOCKOUTS SHALL BE LOCATED FROM MECHANICAL SHEETS.

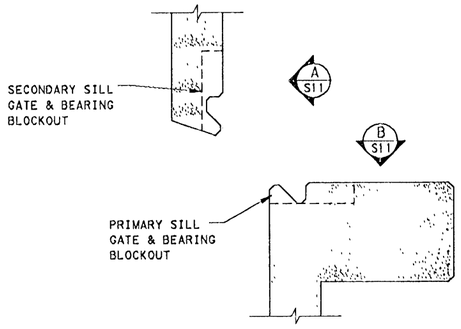

NEW WEIR WALL PLAN

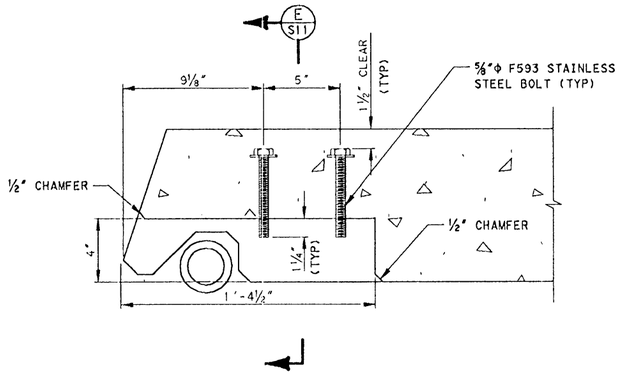

SECTION C S11

SCALE: 1½"= 1'-0"

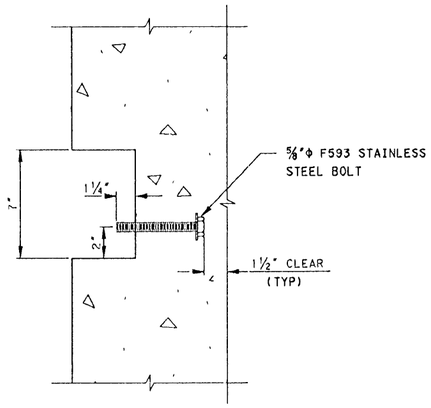

SECTION E S11

SCALE: 1½"= 1'-0"

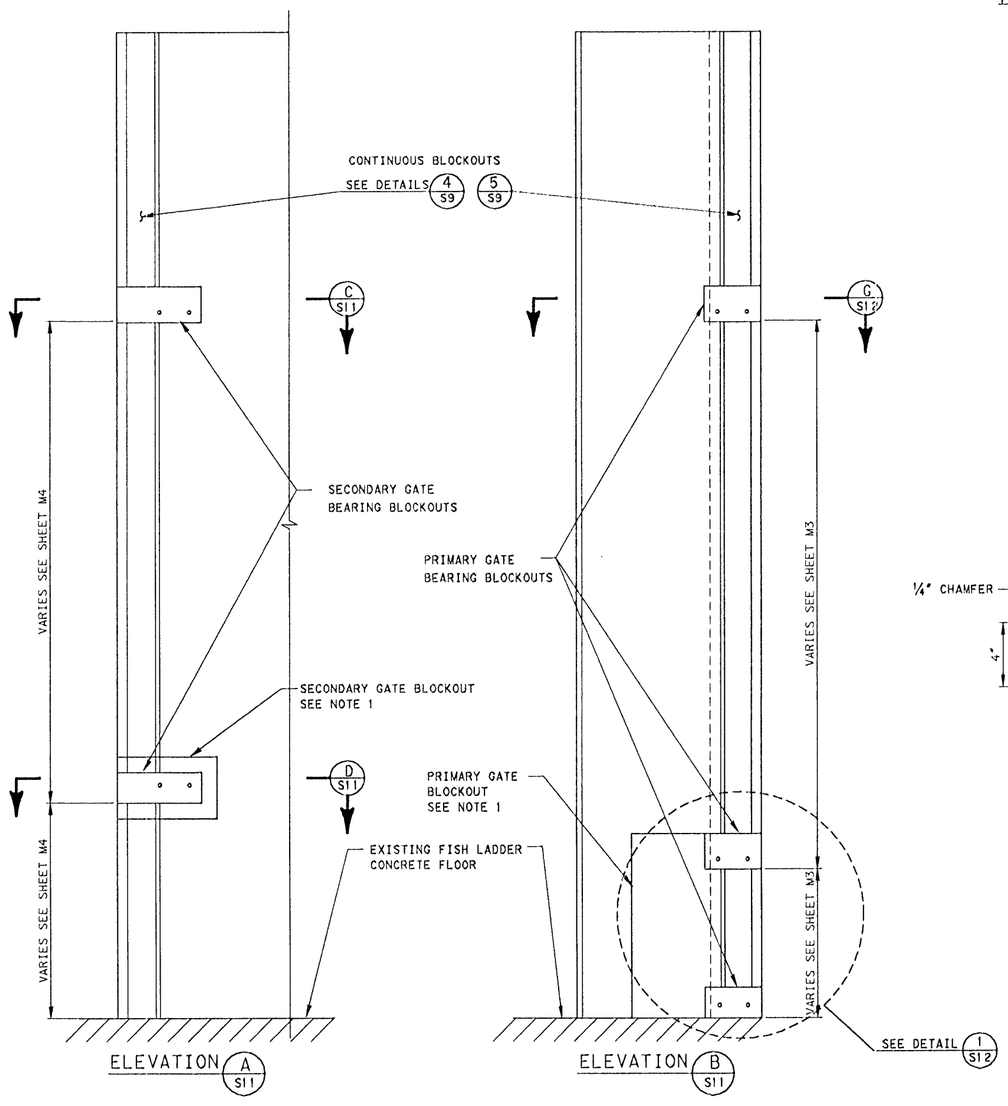

ELEVATION A S11

SCALE: ½"= 1'-0"

ELEVATION B S11

SCALE: ½"= 1'-0"

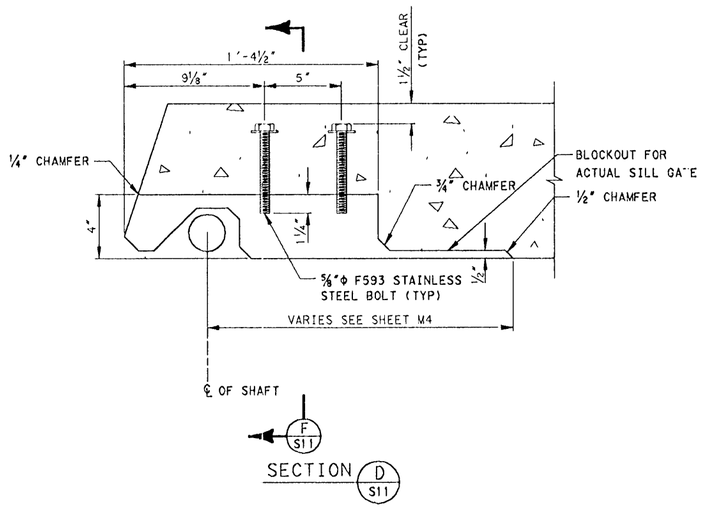

SECTION D S11

SCALE: 1½"= 1'-0"

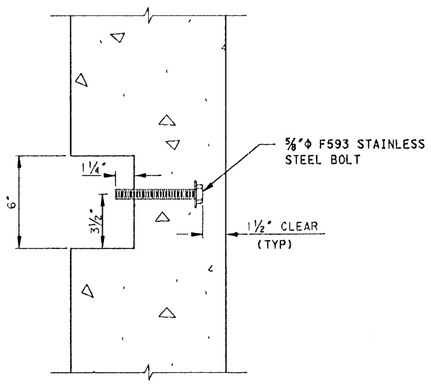

SECTION F S11

SCALE: 1½"= 1'-0"

SCALE: ½"= 1'-0"

12" 0 1' 2' 3' 4'

SCALE: 1½"= 1'-0"

12" 9" 6" 3" 0 1'

US Army Corps of Engineers
Portland District

Revision	Date	Description	By

Designed by: P. DUYCK
Date: 08 AUGUST 2002
Drawn by: B. THOMAS
CADD File Name: jds011f18c01.DGN
Checked by: M. HANSON
Technical Manager: J. HURT
Submitted by: DONALD R. CHAMBERS, P.E. Chief, Structural & Arch. Design

U.S. ARMY ENGINEER DISTRICT
CORPS OF ENGINEERS
PORTLAND, OREGON

COLUMBIA RIVER — OREGON - WASHINGTON
JOHN DAY LOCK AND DAM
SOUTH SHORE FISH LADDER
FISH LADDER IMPROVEMENTS
WEIR RECONSTRUCTION
STRUCTURAL
OPERATOR GATE & BEARING BLOCKOUTS DETAILS I

DRAWING STATUS:
FINAL

DRAWING NO.
JDF-2-18/11

SHEET
S11

...\Drawings\jds011f18c01.dgn 08/13/2002 01:09:16 PM

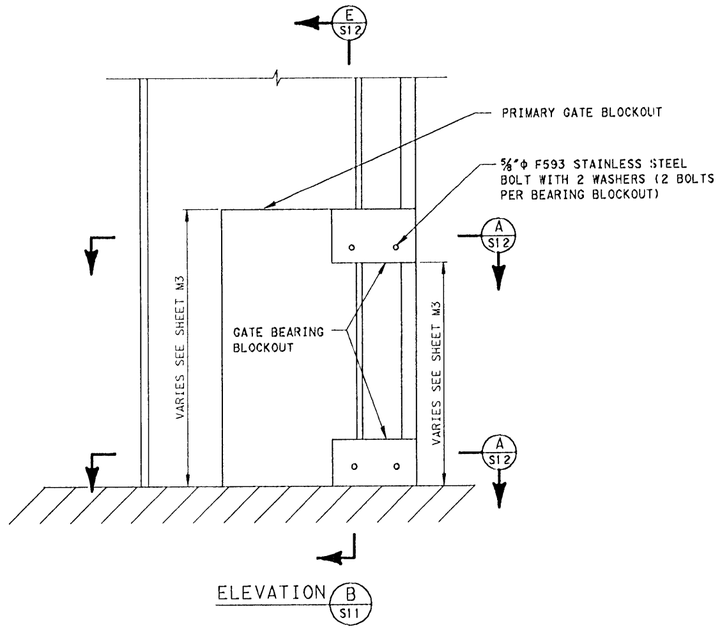

ELEVATION B S11

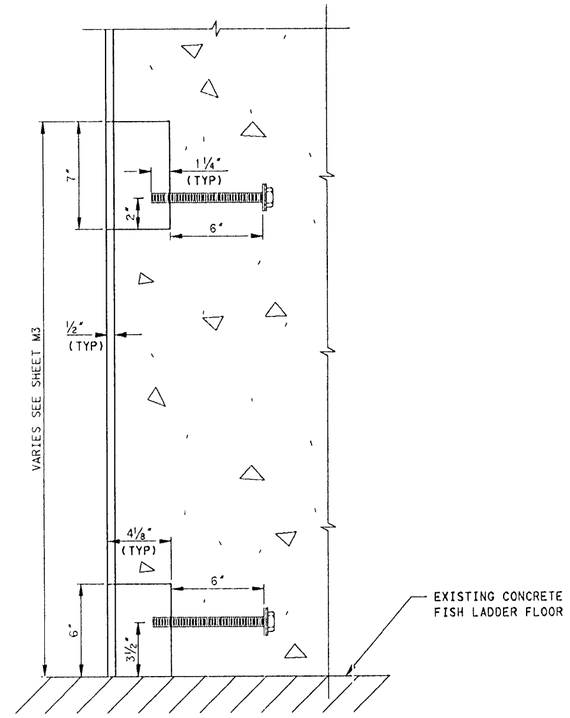

SECTION E S12

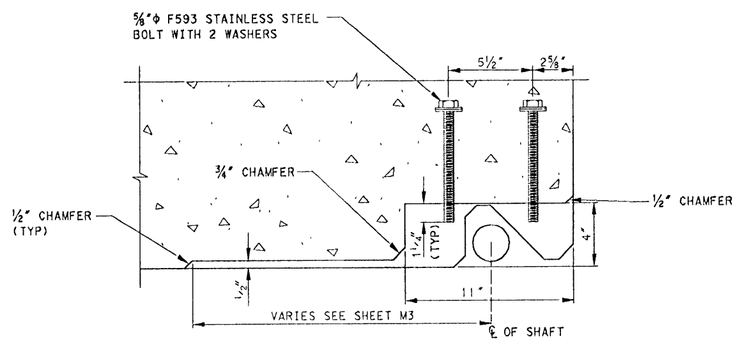

SECTION A S12

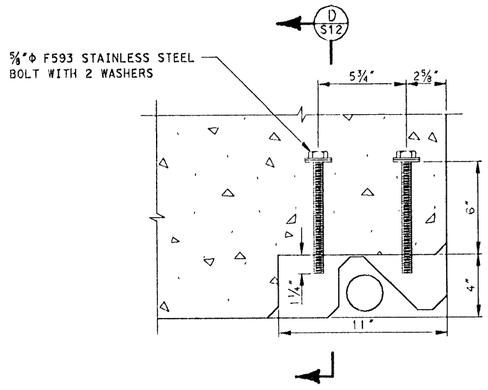

SECTION G S11

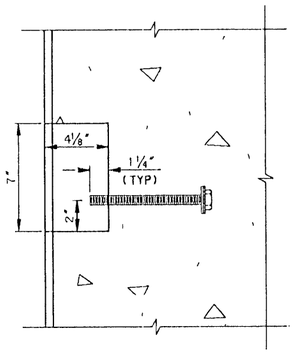

SECTION D S12

SCALE: ¾"= 1'-0"

12" 6" 0 1' 2'

US Army Corps of Engineers
Portland District

Revision	Date	Description	By

Designed by: P. DUYCK
Drawn by: B. THOMAS
Checked by: M. HANSON
Date: 08 AUGUST 2002
CADD File Name: jds012f18c01.DGN
Technical Manager: J. HURT
Submitted by: DONALD R. CHAMBERS, P.E. Chief, Structural & Arch. Design

U.S. ARMY ENGINEER DISTRICT
CORPS OF ENGINEERS
PORTLAND, OREGON

COLUMBIA RIVER — OREGON - WASHINGTON
JOHN DAY LOCK AND DAM
SOUTH SHORE FISH LADDER
FISH LADDER IMPROVEMENTS
STRUCTURAL — WEIR RECONSTRUCTION
OPERATOR GATE & BEARING BLOCKOUTS DETAILS II

DRAWING STATUS: FINAL

DRAWING NO. JDF-2-18/12

SHEET S12

...\Drawings\jds012f18c01.dgn 08/13/2002 01:03:44 PM

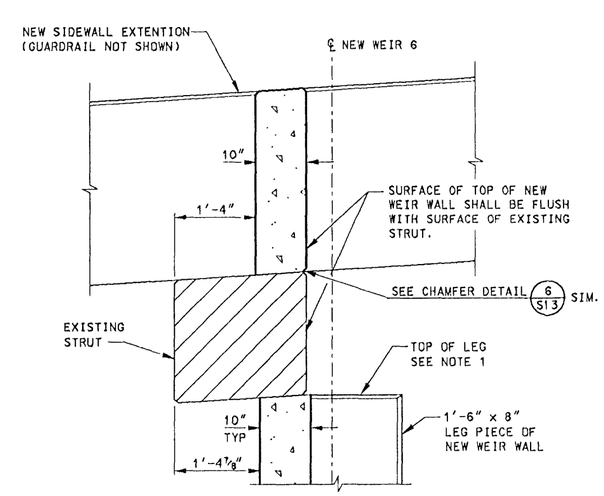

SECTION THRU NEW WEIR NO.6 (B/S6)
SCALE: 1/2"= 1'-0"

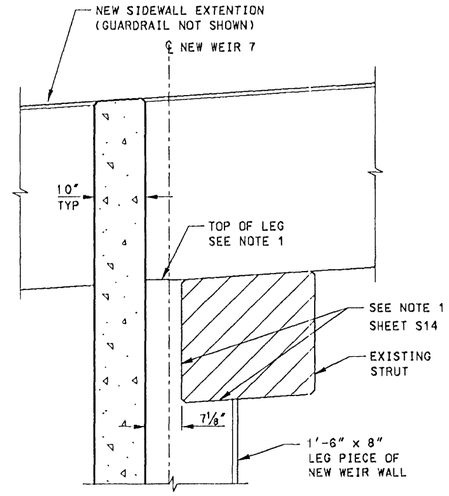

SECTION THRU NEW WEIR NO.7 (C/S6)
SCALE: 1/2"= 1'-0"

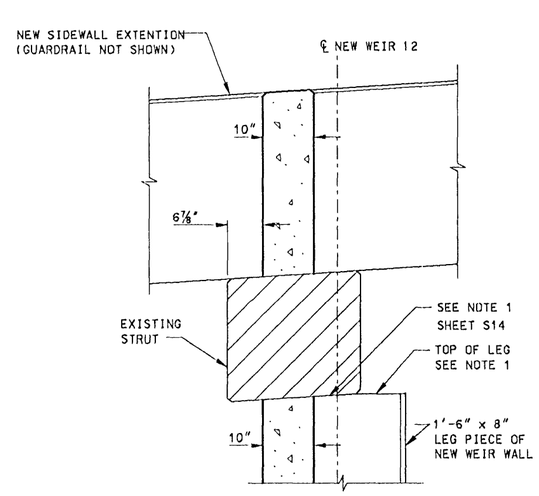

SECTION THRU NEW WEIR NO.12 (D/S7)
SCALE: 1/2"= 1'-0"

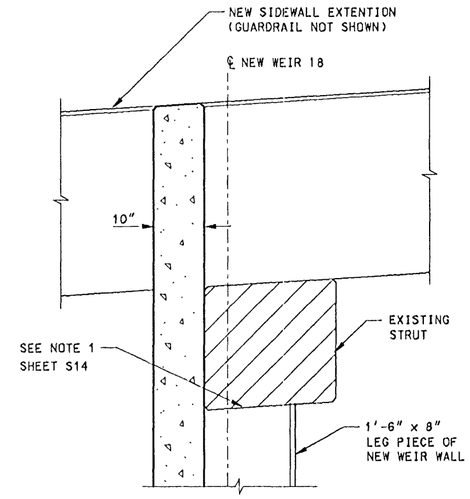

SECTION THRU NEW WEIR NO.18 (E/S7)
SCALE: 1/2"= 1'-0"

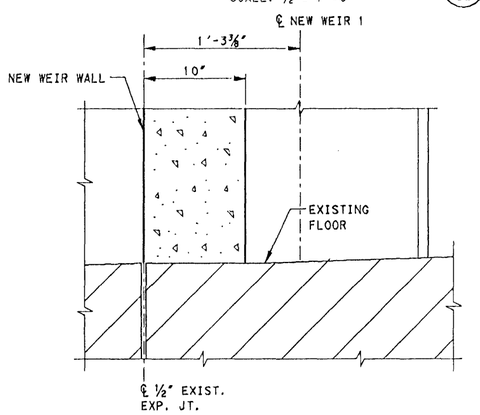

DETAIL (1/S6)
SCALE: 1"= 1'-0"

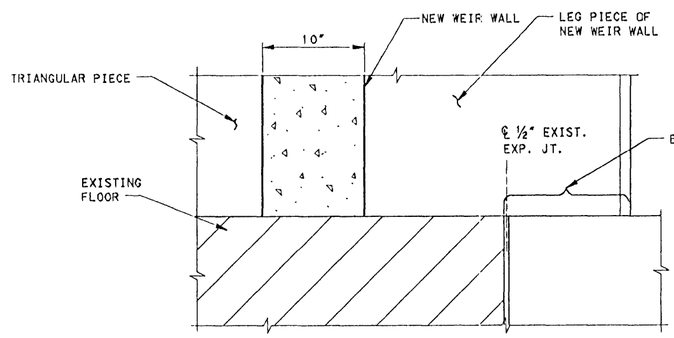

SECTION (L/S8)
SCALE: 1"= 1'-0"

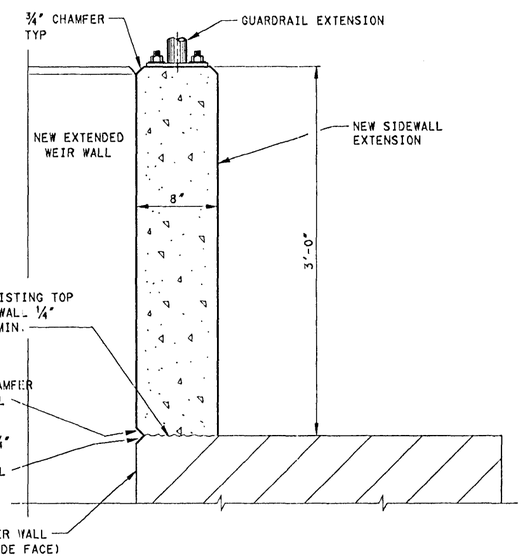

TYPICAL SIDEWALL DETAIL (6/S9)
SCALE: 1"= 1'-0"

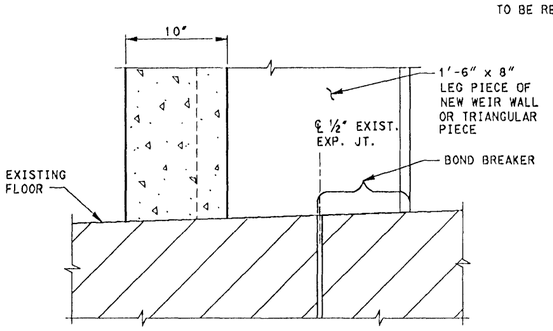

DETAIL (2/S6,S7)
SCALE: 1"= 1'-0"

SECTION (P/S6)
SIMILAR

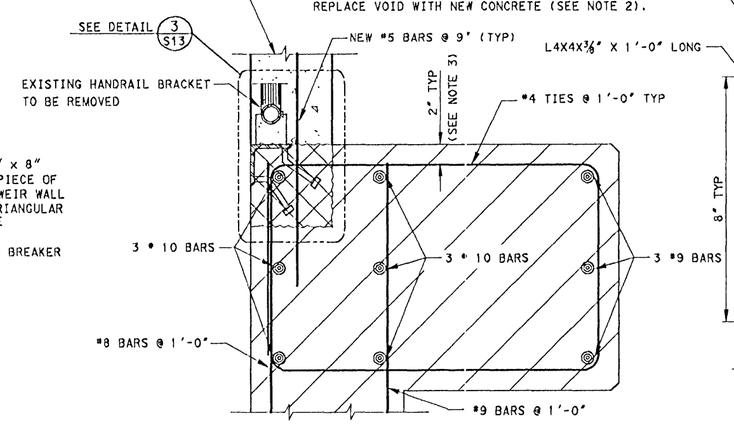

TYPICAL WALKWAY/GUARDRAIL REMOVAL DETAIL
SCALE: 1"= 1'-0"

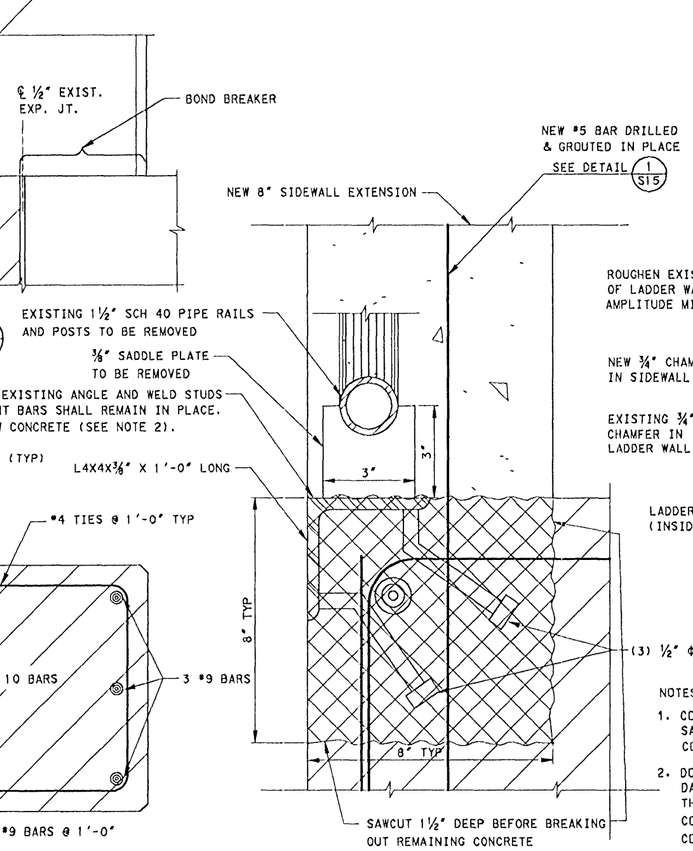

DETAIL (3/S13)
SCALE: 3"= 1'-0"

NOTES:

1. CONTRACTOR MAY CONTINUE THE LEG PORTION TO THE SAME ELEVATION AS WALL PORTION IF THIS IS MORE CONVENIENT. SUBMIT PLAN TO GOVERNMENT FOR APPROVAL.
2. DO NOT REMOVE OR DAMAGE EXISTING REINFORCEMENT. DAMAGED REINFORCEMENT SHALL BE REPLACED AS DIRECTED BY THE GOVERMENT. THE NEW CONCRETE USED TO FILL THE VOID MAY BE EITHER THE SAME AS THE CONCRETE USED IN THE NEW SIDE WALL DIRECTLY ABOVE, OR MAY BE REPAIR CONCRETE AS DEFINED IN SPECIFICATION SECTION 03301. EITHER CONCRETE MIXTURE USED MUST BE PROPERLY COMPACTED AND CONSOLIDATED.
3. THIS IS ONLY AN ESTIMATION OF COVER.

US Army Corps of Engineers
Portland District

Revision	Date	Description	By

Designed by: J. HURT
Date: 08 AUGUST 2002
Drawn by: J. VANDEGRIFT
CADD File Name: JDS013F18C01.DGN
Checked by: M. HANSON
Technical Manager: J. HURT
Submitted by: DONALD R. CHAMBERS, P.E. Chief, Structural & Arch. Design

U.S. ARMY ENGINEER DISTRICT
CORPS OF ENGINEERS
PORTLAND, OREGON

COLUMBIA RIVER — OREGON - WASHINGTON
JOHN DAY LOCK AND DAM
SOUTH SHORE FISH LADDER
FISH LADDER IMPROVEMENTS
STRUCTURAL — WEIR RECONSTRUCTION
NEW WEIR ELEVATIONS
SECTION AND DETAILS I

DRAWING STATUS: FINAL

DRAWING NO. JDF-2-18/13

SHEET S13

..\Drawings\jds013i18c01.dgn 08/13/2002 01:10:22 PM

NOTE:

1. THE CONTRACTOR SHALL ENSURE THAT THE NEW CONCRETE IS PROPERLY CONSOLIDATED IN THE AREAS THAT CONTACT THE EXISTING STRUTS.

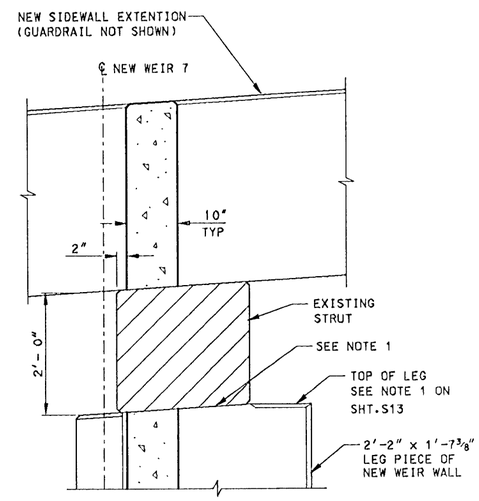

SECTION THRU NEW WEIR NO.7 (F / S6)

SCALE: ½"= 1'-0"

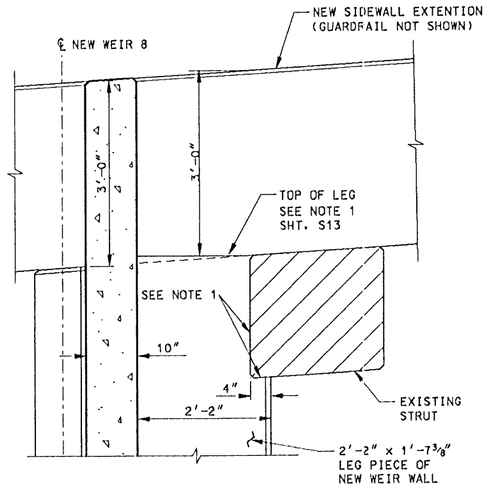

SECTION THRU NEW WEIR NO.8 (G / S6)

SCALE: ½"= 1'-0"

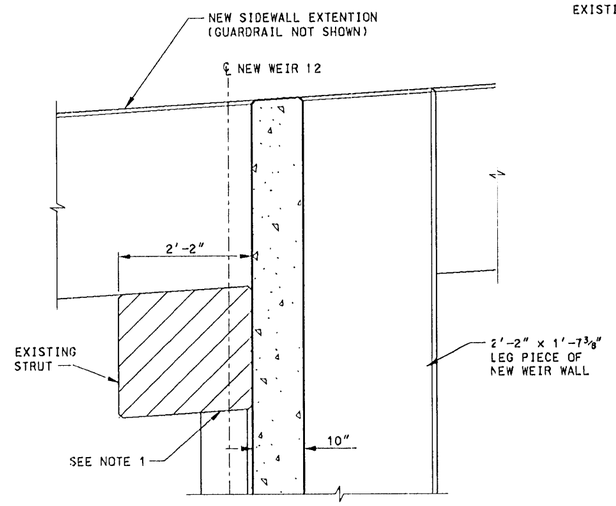

SECTION THRU NEW WEIR NO.12 (H / S7)

SCALE: ½"= 1'-0"

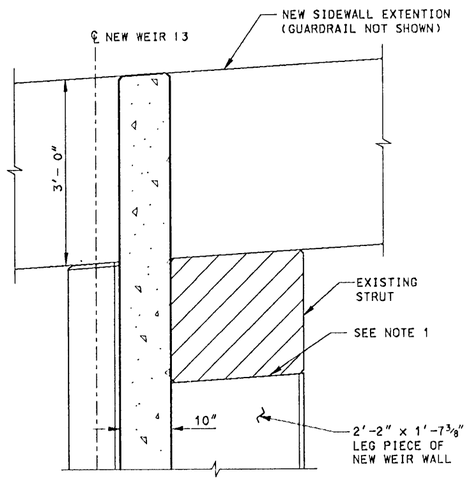

SECTION THRU NEW WEIR NO.13 (I / S7)

SCALE: ½"= 1'-0"

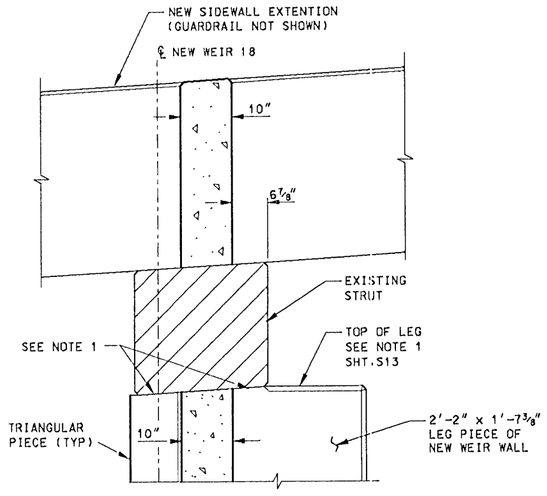

SECTION THRU NEW WEIR NO.18 (J / S7)

SCALE: ½"= 1'-0"

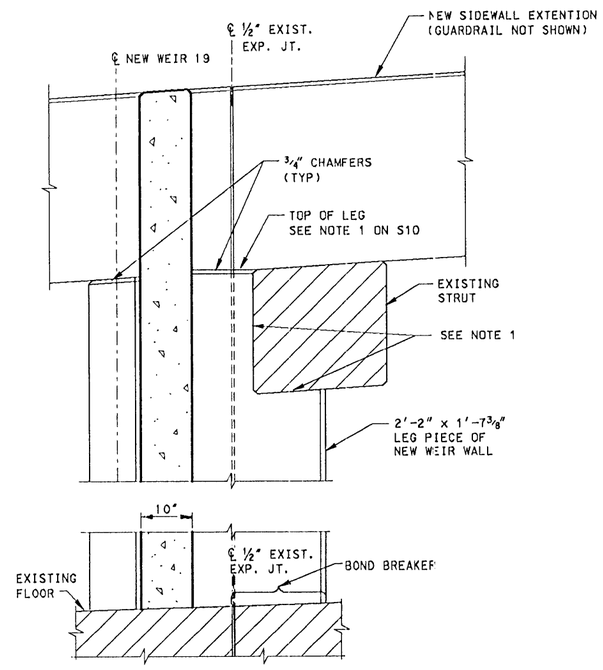

SECTION THRU NEW WEIR NO.19 (K / S7,S8)

SCALE: ½"= 1'-0"

US Army Corps of Engineers
Portland District

Revision	Date	Description	By

Designed by: J. HURT
Date: 08 AUGUST 2002
Drawn by: J. VANDEGRIFT
CADD File Name: JDS013F18C01.DGN
Checked by: M. HANSON
Technical Manager: J. HURT
Submitted by: DONALD R. CHAMBERS, P.E. Chief, Structural & Arch. Design

U.S. ARMY ENGINEER DISTRICT
CORPS OF ENGINEERS
PORTLAND, OREGON

COLUMBIA RIVER — OREGON - WASHINGTON
JOHN DAY LOCK AND DAM
SOUTH SHORE FISH LADDER
FISH LADDER IMPROVEMENTS
STRUCTURAL — WEIR RECONSTRUCTION
NEW WEIR ELEVATIONS
SECTION AND DETAILS II

DRAWING STATUS:
FINAL

DRAWING NO.
JDF-2-18/14

SHEET
S14

...\Drawings\jds014f18c01.dgn 08/13/2002 01:11:01 PM

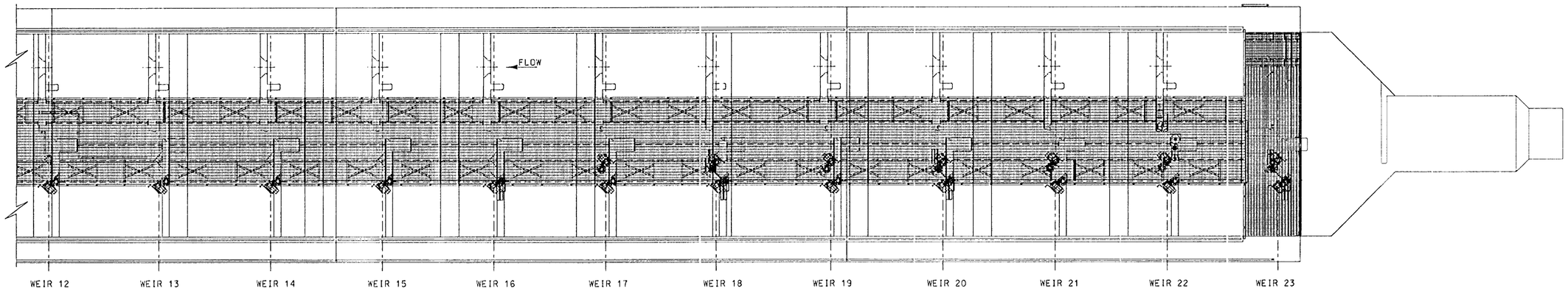

LOCATION PLAN MECHANICAL ACTUATORS

SCALE: 3/32"=1'-0"

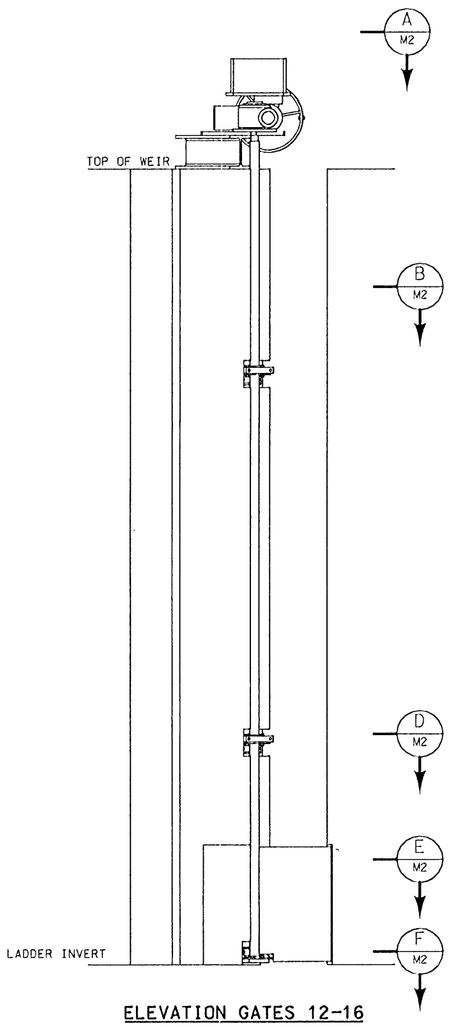

ELEVATION GATES 12-16

SCALE: 3/8"=1'-0"

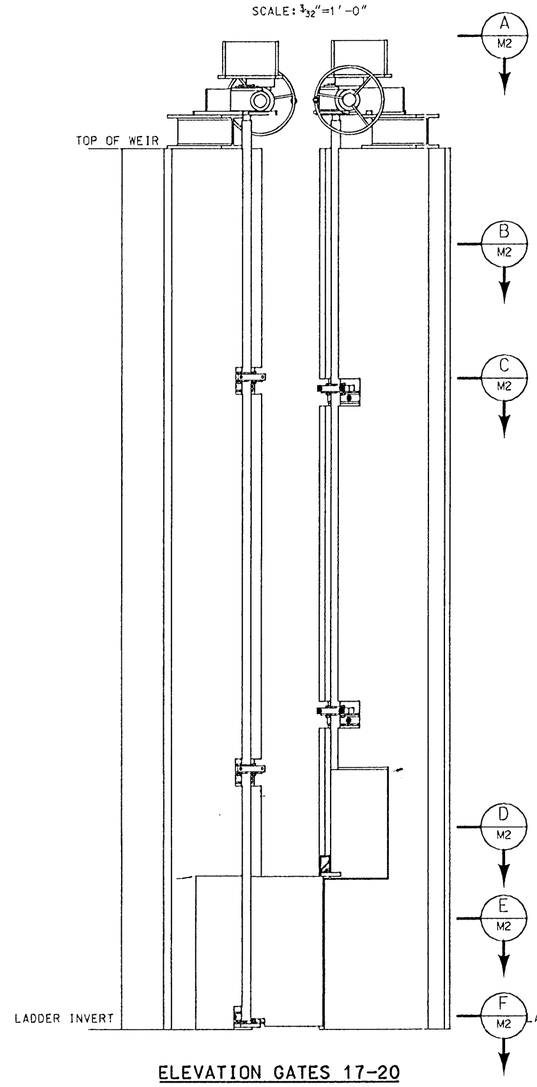

ELEVATION GATES 17-20

SCALE: 3/8"=1'-0"

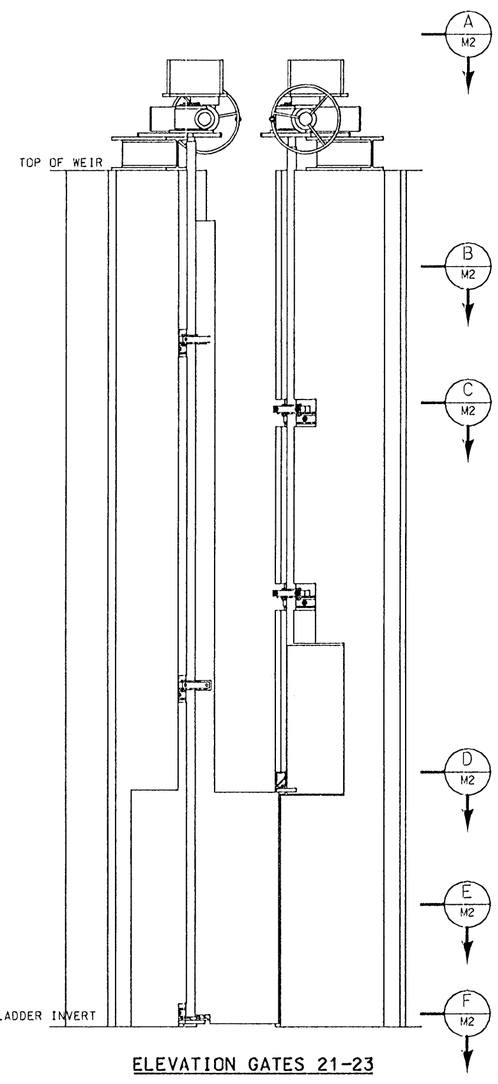

ELEVATION GATES 21-23

SCALE: 3/8"=1'-0"

NOTES:

1. ELEVATION VIEWS ARE LOOKING DOWNSTREAM THROUGH THE SLOTS
2. GEARED ACTUATORS FOR GATES 12-16 AND FOR THE PRIMARY GATES 17-23 SHALL BE CCW OPEN.
3. GEARED ACTUATORS FOR SECONDARY GATES 17-23 SHALL BE CW OPEN.
4. GEARED ACTUATORS SHALL BE TORQUE LIMITED TO 1200 LB FT.

SCALE: 3/8"= 1'-0"

12" 0 2' 4' 6'

SCALE: 3/32"= 1'-0"

12" 0 5' 10' 15' 20'

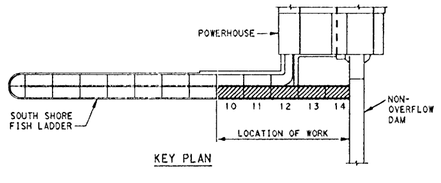

KEY PLAN

US Army Corps of Engineers
Portland District

Revision	Date	Description	By

Designed by: R. METTLER
Date: 08 AUGUST 2002
Drawn by: R. METTLER
CADD File Name: jdm001f14c01.dgn
Checked by: R. WRIDGE
Technical Manager: J. HURT
Submitted by: RICK A. METTLER, P.E. Chief, Mechanical Design

U.S. ARMY ENGINEER DISTRICT
CORPS OF ENGINEERS
PORTLAND, OREGON

COLUMBIA RIVER — OREGON - WASHINGTON
JOHN DAY LOCK AND DAM
SOUTH SHORE FISH LADDER
FISH LADDER IMPROVEMENTS
MECHANICAL — SOUTH SHORE FISHLADDER
MECHANICAL PLAN AND ELEVATIONS - WEIRS 12-23

DRAWING STATUS: FINAL

DRAWING NO. JDF-3-14/1

SHEET M1

...\Drawings\jdm001f14c01.dgn 06/14/2002 03:39:34 PM

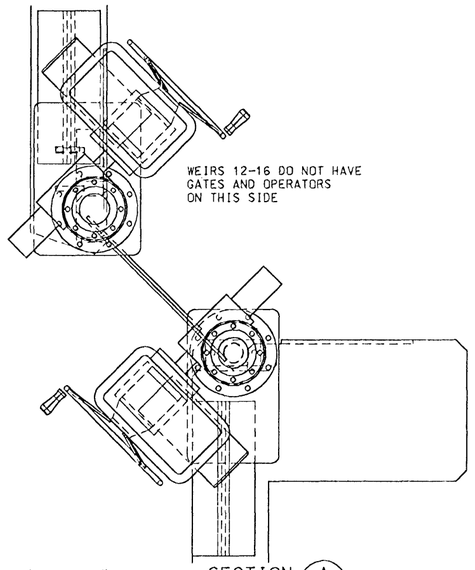

SECTION A / M1
SCALE: ¾"= 1'-0"

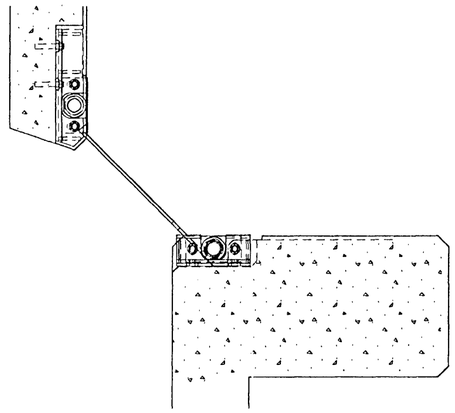

SECTION D / M1
SCALE: ¾"= 1'-0"

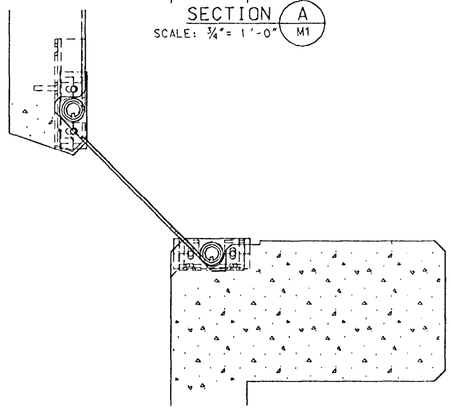

SECTION B / M1
SCALE: ¾"= 1'-0"

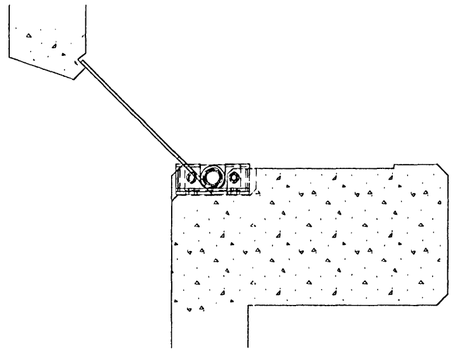

SECTION E / M1
SCALE: ¾"= 1'-0"

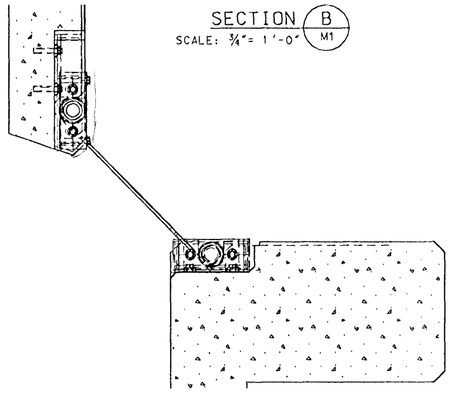

SECTION C / M1
SCALE: ¾"= 1'-0"

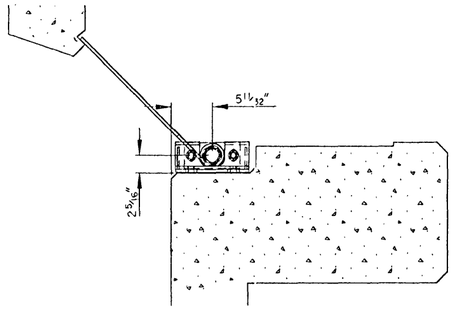

SECTION F / M1
SCALE: ¾"= 1'-0"

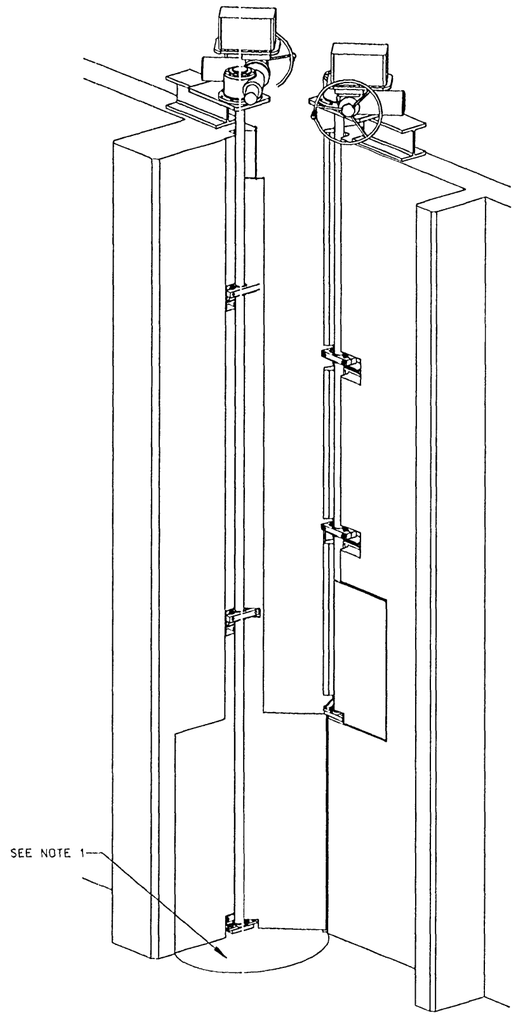

ISOMETRIC VIEW WEIR 23
OTHERS SIMILAR
NTS

SCALE: ¾"= 1'-0"
12" 6" 0 1' 2'

NOTE:

1. FOR THE PRIMARY GATES ON WEIRS 12 THROUGH 19, THE EXISTING FISH LADDER CONCRETE FLOOR SHALL BE GROUND DOWN SO THAT THE GATES HAVE 1/8" CLEARANCE BELOW THEM. THE REMOVED CONCRETE AREA SHALL NOT BE MORE THAN 1/2" DEEP. THE UPSTREAM EDGE OF THE REMOVED AREA SHALL BE SLOPED BACK AT A 30 DEGREE ANGLE SO THAT THERE ARE NO ABRUPT TRANSITIONS.

US Army Corps of Engineers
Portland District

Revision	Date	Description	By

Designed by: R. METTLER
Date: 08 AUGUST 2002
Drawn by: R. METTLER
CADD File Name: jdm002f14c01.dgn
Checked by: R. WRIDGE
Technical Manager: J. HURT
Submitted by: RICK A. METTLER, P.E. Chief, Mechanical Design

U.S. ARMY ENGINEER DISTRICT
CORPS OF ENGINEERS
PORTLAND, OREGON

COLUMBIA RIVER — OREGON - WASHINGTON
JOHN DAY LOCK AND DAM
SOUTH SHORE FISH LADDER
FISH LADDER IMPROVEMENTS
MECHANICAL — SOUTH SHORE FISHLADDER

TYPICAL SECTIONS WEIRS 12-23

DRAWING STATUS: FINAL

DRAWING NO. JDF-3-14/2

SHEET M2

...\Drawings\jdm002f14c01.dgn 08/14/2002 05:50:12 PM

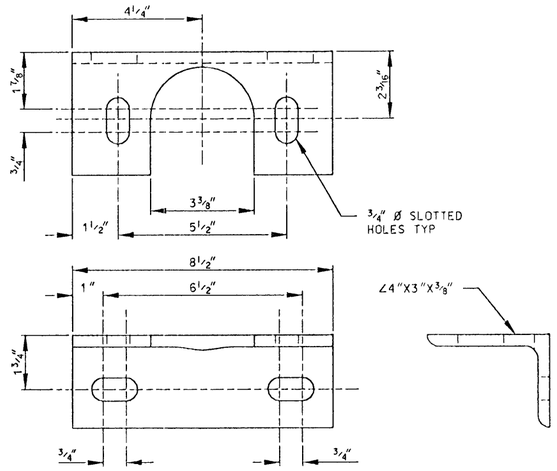

INTERMEDIATE BEARING BRACKET

MATERIAL: STAINLESS STEEL
ASTM A276, UNS S30403
NO. REQ'D: 23
SCALE: 3"=1'-0"

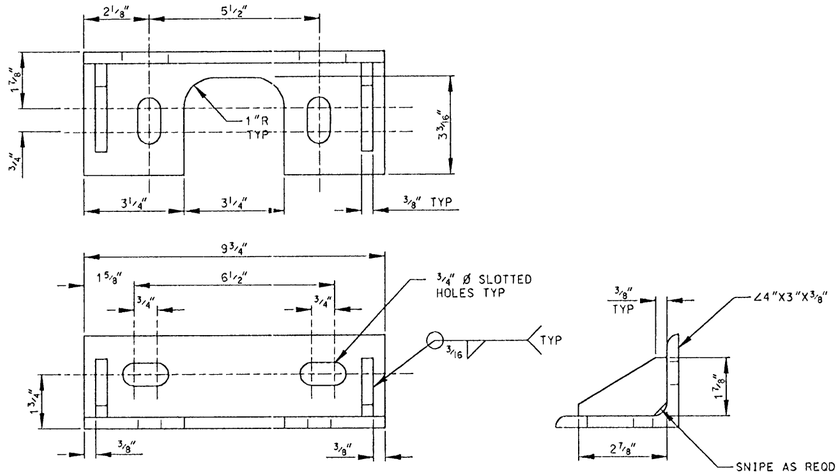

LOWER BEARING BRACKET

MATERIAL: STAINLESS STEEL
ASTM A167, UNS S30400
NO. REQ'D: 12
SCALE: 3"=1'-0"

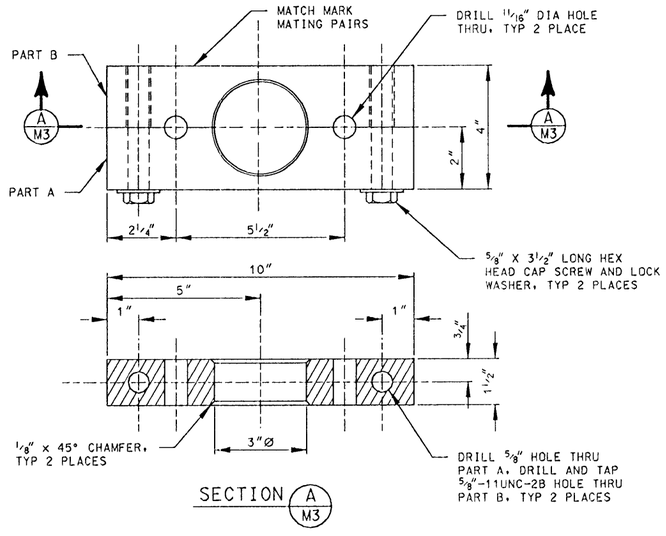

INTERMEDIATE BEARING RETAINER

MATERIAL: STAINLESS STEEL
ASTM A167, UNS S30400
NO. REQ'D: 34
SCALE: 3"=1'-0"

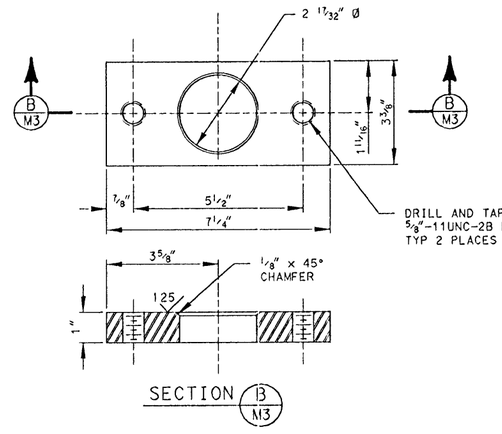

LOWER BEARING RETAINER

MATERIAL: STAINLESS STEEL
ASTM A167, UNS S30400
NO. REQ'D: 19
SCALE: 3"=1'-0"

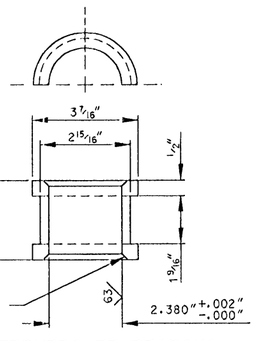

INTERMEDIATE BEARING

MATERIAL: SELF-LUBRICATING COMPOSITE
TENMAT T814
PART NO.: HY618
NO. REQ'D: 34 + 4 SPARES
SCALE: 3"=1'-0"

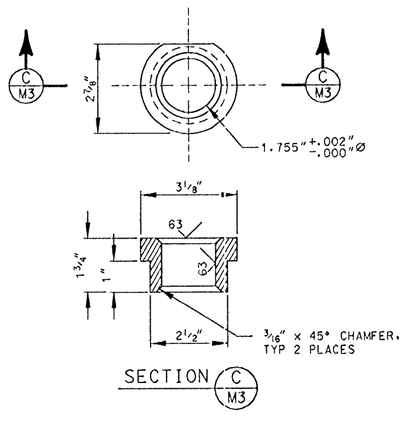

LOWER BEARING

MATERIAL: SELF-LUBRICATING COMPOSITE
TENMAT T814
PART NO: HY619
NO. REQ'D: 19 + 2 SPARES
SCALE: 3"=1'-0"

WEIR	DIM "A" FT.	DIM "B" FT.
12	NA	8'-4"
13	4'-1"	11'-7"
14	4'-4"	11'-11"
15	4'-4"	12'-2"
16	4'-7"	12'-6"
17L	4'-10"	12'-10"
18L	4'-10"	13'-0"
19L	5'-1"	13'-4"
20L	5'-4"	13'-10"
21L	5'-10"	14'-6"
22L	6'-7"	15'-4"
23L	7'-1"	14'-5"

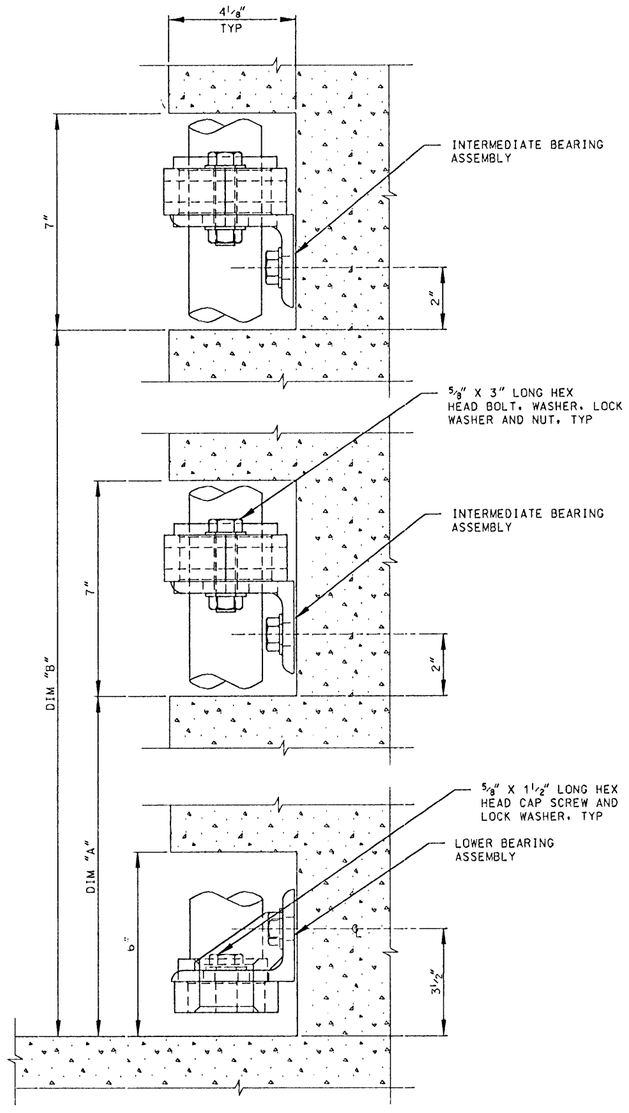

LOWER GATE BLOCKOUT LOCATIONS

SCALE: 3"=1'-0"

NOTES:

1. DIMENSION TOLERANCES SHALL BE 1/32" LINEAR AND 0.25° ANGULAR, UNLESS OTHERWISE SHOWN.
2. 125 ALL MACHINED SURFACES, EXCEPT AS NOTED. SURFACE TEXTURE PER ANSI B46.1.
3. BREAK ALL CORNERS TO REMOVE SHARP EDGES.
4. MECHANICAL FASTENERS AND WASHERS SHALL BE 18-8 OR 300 SERIES STAINLESS STEEL. APPLY ANTI-GALLING COMPOUND ON FASTENER THREADS PRIOR TO ASSEMBLY.
5. BOND THE SELF-LUBRICATING BEARINGS TO THEIR RETAINERS UTILIZING AN APPROVED 2-PART EPOXY ADHESIVE PER THE BEARING MANUFACTURER'S RECOMENDATIONS.
6. TIGHTEN NUTS WITH LOCK WASHERS SNUG TIGHT ON CONCRETE ANCHORS.
7. WELDING OF STAINLESS STEEL SHALL BE PERFORMED IN ACCORDANCE WITH THE REQUIREMENTS OF AWS D1.6.

SCALE: 3"= 1'-0"
0 3" 6" 12"

US Army Corps of Engineers
Portland District

Revision	Date	Description	By

Designed by: R. METTLER
Date: 08 AUGUST 2002
Drawn by: R. METTLER
CADD File Name: jdm003f14c01.dgn
Checked by: R. WRIDGE
Technical Manager: J. HURT
Submitted by: RICK A. METTLER, P.E. Chief, Mechanical Design

U.S. ARMY ENGINEER DISTRICT
CORPS OF ENGINEERS
PORTLAND, OREGON

COLUMBIA RIVER — OREGON - WASHINGTON
JOHN DAY LOCK AND DAM
SOUTH SHORE FISH LADDER
FISH LADDER IMPROVEMENTS
SOUTH SHORE FISH LADDER
MECHANICAL
PRIMARY GATES
BEARING/SHAFT DETAILS

DRAWING STATUS: FINAL

DRAWING NO. JDF-3-14/3

M3

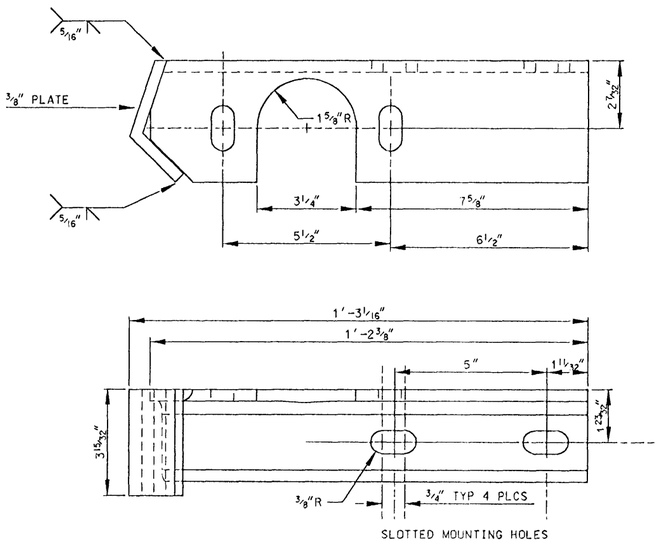

INTERMEDIATE BEARING SUPPORT

SCALE: 3"=1'-0"

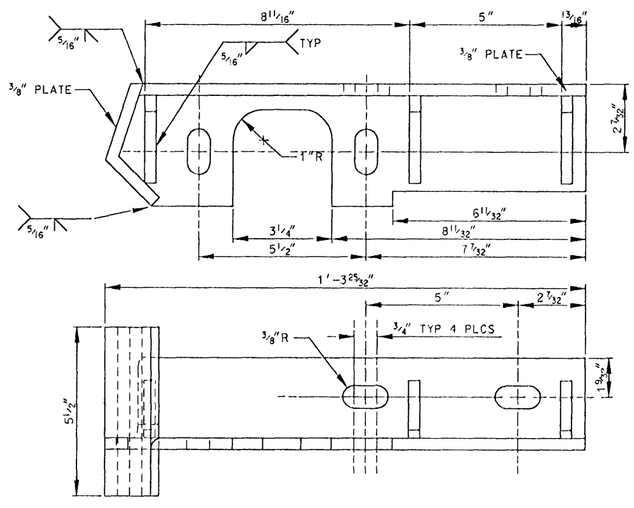

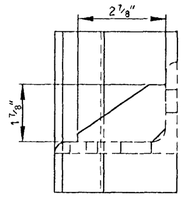

LOWER BEARING SUPPORT

SCALE: 3"=1'-0"

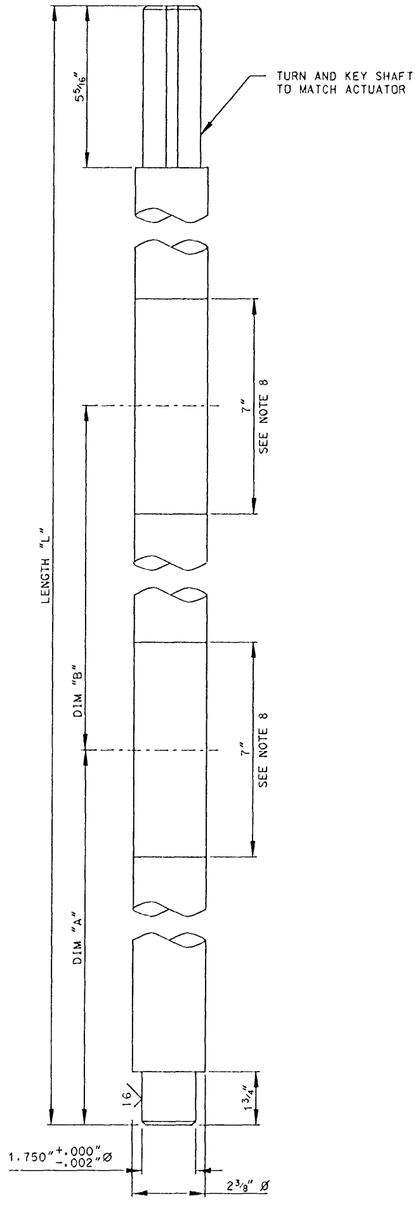

OPERATING SHAFT

MATERIAL: STAINLESS STEEL
ASTM A276, UNS S30403

NO. REQ'D: 7

SCALE: 3"=1'-0"

WEIR	LENGTH "L"	DIM "A"	DIM "B"
12P	16'-8 3/8"	NA	8'-8"
13P	17'-1 1/4"	4'-5"	11'-11"
14P	17'-6 1/4"	4'-8"	12'-3"
15P	17'-11 1/8"	4'-8"	12'-6"
16P	18'-4"	4'-11"	12'-10"
17P	18'-9"	5'-2"	13'-2"
18P	19'- 1 7/8"	5'-2"	13'-4"
19P	19'-6 7/8"	5'-5"	13'-8"
20P	20'-3 1/2"	5'-8"	14'-2"
21P	21'-1 3/8"	6'-2"	14'-10"
22P	21'-11 1/4"	6'-11"	15'-7"
23P	19'-9 1/8"	7'-5"	14'-9"
17S	16'-1/2"	NA	11'-1"
18S	16'-5 3/8"	NA	11'-4"
19S	16'-7 3/8"	NA	11'-8"
20S	17'-1"	6'-10"	13'-12"
21S	17'-4 7/8"	7'-7"	14'-10"
22S	17'-5 3/4"	8'-7"	15'-9"
23S	14'-9 1/2"	9'-4"	12'-4"

WEIR	DIM C	DIM D	DIM E
17U	2'-9"	NA	10'-9"
18U	2'-9"	NA	10'-12"
19U	3'-0"	NA	11'-4"
20U	3'-3"	6'-6"	13'-8"
21U	3'-9"	7'-3"	14'-6"
22U	4'-6"	8'-3"	15'-5"
23U	5'-0"	9'-0"	12'-0"

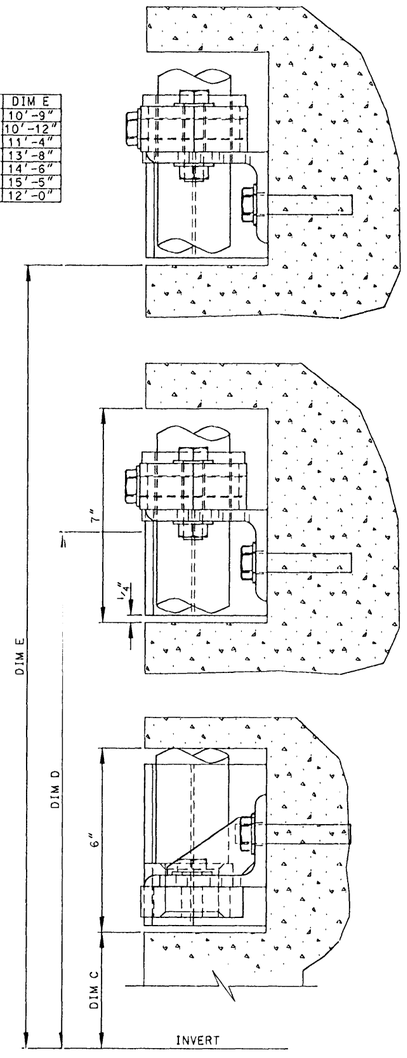

UPPER GATE BLOCKOUT LOCATIONS

NOTES:

1. DIMENSION TOLERANCES SHALL BE 1/32" LINEAR AND 0.25° ANGULAR, UNLESS OTHERWISE SHOWN.
2. 125 ALL MACHINED SURFACES, EXCEPT AS NOTED. SURFACE TEXTURE PER ANSI B46.1.
3. BREAK ALL CORNERS TO REMOVE SHARP EDGES.
4. MECHANICAL FASTENERS AND WASHERS SHALL BE 18-8 OR 300 SERIES STAINLESS STEEL. APPLY ANTI-GALLING COMPOUND ON FASTENER THREADS PRIOR TO ASSEMBLY.
5. BOND THE SELF-LUBRICATING BEARINGS TO THEIR RETAINERS UTILIZING AN APPROVED 2-PART EPOXY ADHESIVE PER THE BEARING MANUFACTURER'S RECOMENDATIONS.
6. TIGHTEN NUTS WITH LOCK WASHERS SNUG TIGHT ON CONCRETE ANCHORS.
7. WELDING OF STAINLESS STEEL SHALL BE PERFORMED IN ACCORDANCE WITH THE REQUIREMENTS OF AWS D1.6.
8. MACHINE OPERATING SHAFT TO 2.375" +.000 -.002 DIAMETER WITH A 16 MICROINCH FINISH.

SCALE: 3"= 1'-0"

0 3" 6" 12"

US Army Corps of Engineers
Portland District

Revision	Date	Description	By

Designed by: R. METTLER
Drawn by: R. METTLER
Checked by: R. WRIDGE
Date: 08 AUGUST 2002
CADD File Name: jdm004f14c01.dgn
Technical Manager: J. HURT
Submitted by: RICK A. METTLER, P.E. Chief, Mechanical Design

U.S. ARMY ENGINEER DISTRICT
CORPS OF ENGINEERS
PORTLAND, OREGON

COLUMBIA RIVER — OREGON - WASHINGTON
JOHN DAY LOCK AND DAM
SOUTH SHORE FISH LADDER
FISH LADDER IMPROVEMENTS
SOUTH SHORE FISH LADDER
MECHANICAL
SECONDARY GATES
BEARING/SHAFT DETAILS

DRAWING STATUS:
FINAL

DRAWING NO.
JDF-3-14/4

M4

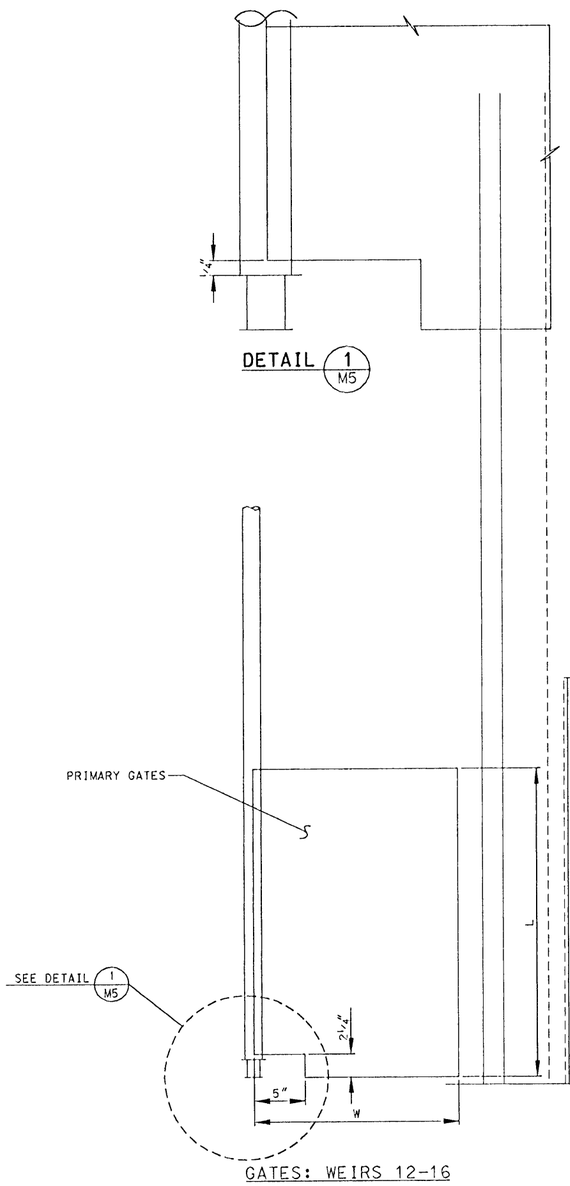

GATES: WEIRS 12-16

WEIR	L	W
12	1'	1'-7 1/2"
13	2'	1'-7 1/2"
14	2'-3"	1'-7 1/2"
15	2'-3"	1'-7 1/2"
16	2'-6"	1'-7 1/2"

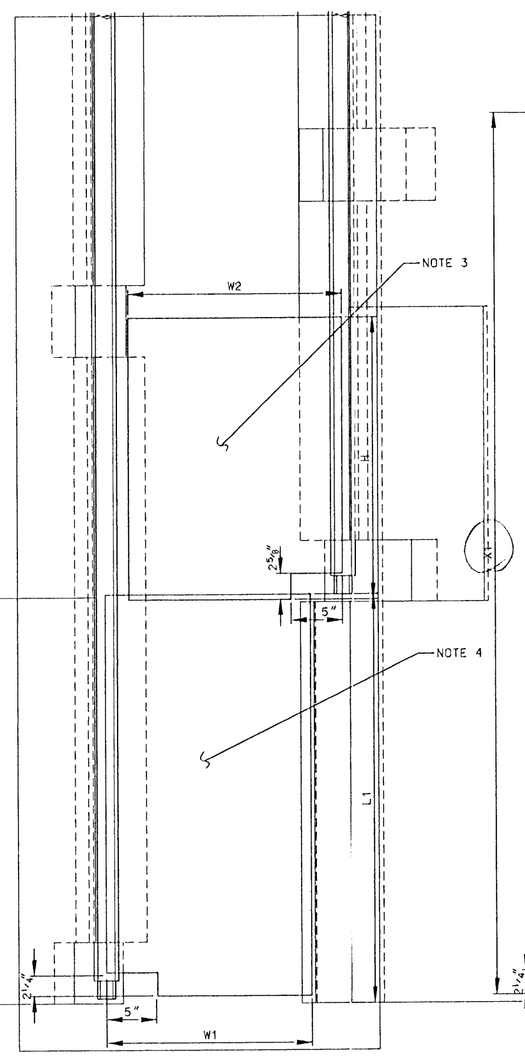

GATES: WEIRS 17-20

SCALE: 1"=1'-0"

WEIR	L1	W1	H	W2
17	2'-9"	1'-7 1/2"	1'-0"	1'-7 1/2"
18	2'-9"	1'-7 1/2"	1'-3"	1'-7 1/2"
19	3'-0"	1'-7 1/2"	1'-9"	1'-7 1/2"
20	3'-3"	1'-7 1/2"	2'-3"	1'-7 1/2"

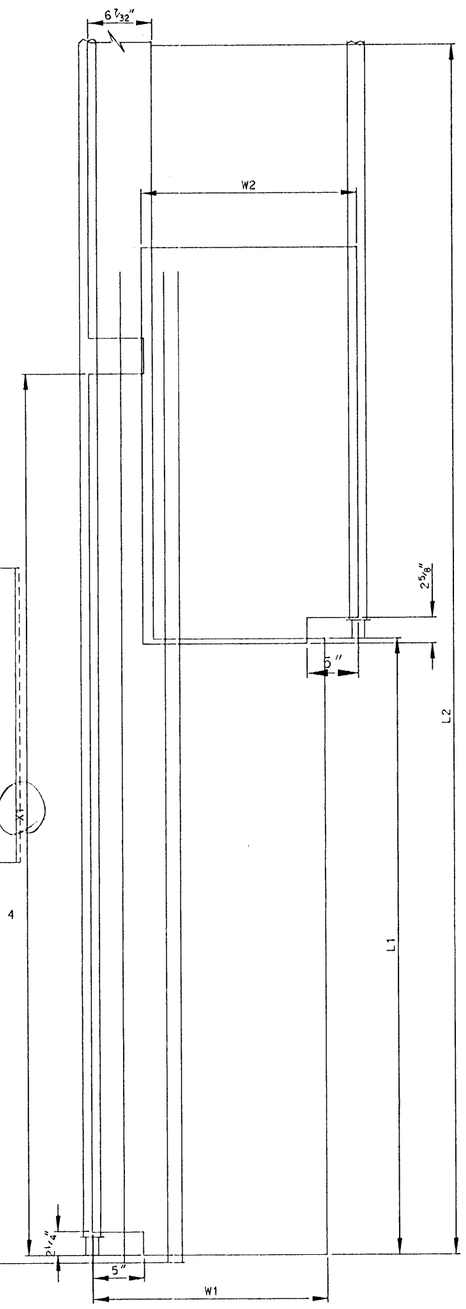

GATES: WEIRS 21-23

SCALE: 1"=1'-0"

WEIR	L1	W1	L2	W2	X1	X2
21	3'-9"	1'-10 1/2"	19'	1'-10 1/2"	5'-9 1/4"	14'-5 1/4"
22	4'-6"	1'-10 1/2"	20'	1'-10 1/2"	6'-6 1/4"	15'-3 1/4"
23	5'-0"	1'-10 1/2"	18'	1'-10 1/2"	7'- 1/4"	14'-4 1/4"

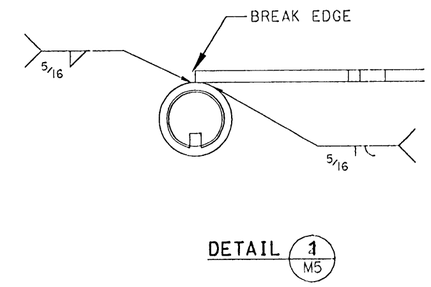

NOTES

1. TRUE SHAFT STRAIGHTNESS SHALL BE WITHIN 1/16"
2. RADIUS TOP SURFACE OF GATES 3/16" BOTH SIDES
3. GATE MATERIALS SHALL BE MANUFACTURED IN ACCORDANCE TO THE REQUIREMENTS OF ASTM A167, UNS S30403 AND SHALL BE 3/8" THICK
4. UPPER GATE SECTION IS REFERRED TO AS THE SECONDARY GATE, TYPICAL FOR ALL GATES
5. LOWER GATE SECTION IS REFERRED TO A S THE PRIMARY GATE, TYPICAL FOR ALL GATES.

US Army Corps of Engineers
Portland District

Revision	Date	Description	By

Designed by: R. GROOT
Date: 08 AUGUST 2002
Drawn by: R. GROOT
CADD File Name: JDM005F14C01.DGN
Checked by: R. WRIDGE
Technical Manager: J. HURT
Submitted by: RICK A. METTLER, P.E. Chief, Mechanical Design

U.S. ARMY ENGINEER DISTRICT
CORPS OF ENGINEERS
PORTLAND, OREGON

COLUMBIA RIVER — OREGON - WASHINGTON
JOHN DAY LOCK AND DAM
SOUTH SHORE FISH LADDER
FISH LADDER IMPROVEMENTS
SOUTH SHORE FISHLADDER
MECHANICAL

GATE DETAILS

DRAWING STATUS: FINAL

DRAWING NO. JDF-3-14/5

SHEET M5

...\Drawings\jdm005f14c01.dgn 08/14/2002 07:53:13 PM

GRAPHIC SYMBOLS

- SECTION OR ELEVATION REFERENCE: TOP LETTER INDICATES SECTION OR ELEVATION BOTTOM NUMBER INDICATES SHEET REFERENCED
- DETAIL REFERENCE: TOP NUMBER INDICATES DETAIL BOTTOM NUMBER INDICATES SHEET REFERENCED
- MATERIAL LIST ITEM
- 125V, 20A DUPLEX RECEPTACLE, GFCI - INDICATES GFCI PROTECTED WP - INDICATES WEATHERPROOF COVER
- SINGLE-POLE, SINGLE-THROW (SPST) SWITCH
- SINGLE POLE SNAP SWITCH 125V, 20A
- DISCONNECT SWITCH (PLAN VIEW)
- JUNCTION BOX
- CIRCUIT BREAKER XXXA CURRENT RATING NOTED OR MOTOR CIRCUIT PROTECTOR XX/M MAG ONLY RATING SHOWN
- ELECTRICALLY-OPERATED, DRAWOUT TYPE, METAL-CLAD CIRCUIT BREAKER
- ELECTRICALLY-OPERATED, DRAWOUT TYPE, METAL ENCLOSED AIR CIRCUIT. NUMBER INDICATES TRIP RATING IN AMPERES
- MOLDED-CASE CIRCUIT BREAKER, NUMBER INDICATES TRIP RATING IN AMPERES
- DISCONNECT SWITCH
- DISCONNECTING DEVICE
- POWER TRANSFORMER (ONE LINE DIAGRAM)
- RESISTOR
- FUSE
- DELTA CONNECTION (ONE-LINE DIAGRAM)
- CONNECTION TO GROUND BUS
- EQUIPMENT OUTLINE (EXISTING)
- EQUIPMENT OUTLINE (NEW OR GOV. FURNISHED)
- EXISTING FEEDER
- NEW FEEDER
- GROUNDED WYE CONNECTION (ONE-LINE DIAGRAM)
- SWITCH-TYPE TERMINAL BLOCK
- FUSE-TYPE TERMINAL BLOCK
- OPEN CONTACT
- CLOSE CONTACT
- OPENING COIL
- CLOSING COIL
- MECHANICAL INTERLOCK
- CLOSING TORQUE SWITCH INTERRUPTS CONTROL CIRCUIT IF MECHANICAL OVERLOAD OCCURS DURING CLOSING CYCLE
- OPENING TORQUE SWITCH INTERRUPTS CONTROL CIRCUIT IF MECHANICAL OVERLOAD OCCURS DURING OPENING CYCLE

CONDUIT AND GROUNDING

- CONDUIT EXPOSED
- CONDUIT EMBEDDED IN FLOOR OR WALL
- CONDUIT TURNING TOWARD OBSERVER.
- CONDUIT TURNING AWAY FROM OBSERVER.
- EMBEDDED GROUND CONDUCTOR (SIZE AS INDICATED).
- G.I. GROUND INSERT IN FLOOR
- CONDUIT CAPPED BELOW FIN. GRADE
- CONDUIT TICK MARKS DESIGNATION
- PHASE CONDUCTOR(S) AND/OR NEUTRAL CONDUCTOR
- GROUND CONDUCTOR

NOMENCLATURE

A. TERMINAL EQUIPMENT

L - LOCK
F - FISH RELATED
D - NON-OVERFLOW DAM

1. SWITCHBOARDS AND SWITCHGEAR

LCQ - 480V SWITCHGEAR (NAV LOCK)
SU - 480V SWITCHBOARD (MAIN UNITS)
SUA - 480V SWITCHBOARD (FISHWATER UNITS)
SJ - 13.8kV SWITCHGEAR (STATION SERVICE)

2. LOAD CENTERS

CQ - 480V (POWERHOUSE)
DQ - 480V (NON-OVERFLOW DAM)
FCQ - 480V (FISH RELATED
SQ - 480V SUBSTATION (POWERHOUSE)

3. APPARATUS

B - BATTERY
CT - CURRENT TRANSFORMER
IOR - REMOTE PLC INPUT/OUTPUT RACK
L - LIGHTING
M - MOTOR
MCC - MOTOR CONTROL CENTER
T - TRANSFORMER (POWER)
TR - TRANSFORMER (LIGHTING)
X - BREAKER (ADD VOLTAGE LETTER)
Z - DISC. SWITCH (ADD VOLTAGE LETTER)

B. MODIFYING TERMS FOR TERMINAL EQUIPMENT

1. AS AN AID TO FURTHER IDENTIFICATION OF VOLTAGE CLASS AND LOCATION OF THE EQUIPMENT, THE FOLLOWING ARE APPLIED TO SEPARATELY MOUNTED BREAKERS, DISCONNECTING MOUNTED BREAKERS, DISCONNECTING SWITCHES, CURRENT TRANSFORMER AND VOLTAGE TRANSFORMERS.

J - 13.8KV
P - 5KV
Q - 480V
R - 120/240 (120/208)
N - NEUTRAL (i.e. GN1,TN1)

2. SERVICE CODE OR VOLTAGE CLASS

c - CONTROL CIRCUITS

f - FIBER OPTIC CIRCUIT
j - POWER CIRCUIT, 13.8kVAC
q - POWER CIRCUIT, 480VAC
r - POWER CIRCUIT (LIGHTING) 120/240 OR 120/208 VAC
s - SPARE CONDUIT
tn - LOCAL AREA NETWORK (LAN) CIRCUITS

C. CIRCUIT AND ROUTING IDENTIFICATION

1. CLOSED CIRCUIT TELEVISION (CCTV) VIDEO CIRCUITS ELECTRICAL CIRCUITS AND CONDUITS ARE IDENTIFIED AS FOLLOWS:

A. BETWEEN MAJOR ITEMS OF EQUIPMENT, A THREE PART NUMBER IS USED.

START OF RUN — END OF RUN
SERVICE CODE OR VOLTAGE CLASS — SUA-q1-CQA3 — CIRCUIT NUMBER

B. A TWO-PART NUMBER IS USED FOR MOST LIGHTING AND SOME POWER DISTRIBUTION CIRCUITS; I.E., THE END OF RUN IS OMITTED.

C. CONTROL CIRCUIT NUMBERS CORRESPOND TO THE NUMBER OF THE CONTROLLED POWER CIRCUIT; e.g. CQA3-c1 WOULD CONTROL CQA3-q1.

D. CONDUIT NUMBERS ARE GENERALLY IDENTICAL TO THE CIRCUIT CONTAINED WITHIN THE CONDUIT.

E. CIRCUITS TO DEVICES FORMING AN INTEGRAL PART OF TERMINAL EQUIPMENT RECEIVE THE TERMINAL EQUIPMENT DESIGNATION (e.g. THE CIRCUIT TO CT'S IN CIRCUIT BREAKER XJ1 COULD BE DESIGNATED SU1-q1-XJ1). CIRCUITS TO SEPARATELY MOUNTED DEVICES RECEIVE THE DESIGNATION ASSIGNED TO THE DEVICE (i.e. CQ24-q1-4C1 IS A CIRCUIT GOING TO TRANS. OIL PUMP 4C1).

2. MULTI-CONDUCTOR CABLES ARE IDENTIFIED BY SUFFIX "c"; i.e., 8/c INDICATES AN EIGHT-CONDUCTOR CABLE

ABBREVIATIONS

A	AMMETER, AMPERE
AF	AMP FUSE, AMP FRAME
AFF	ADULT FISH FACILTIY
AFG	ABOVE FINISHED GRADE
AHU	AIR HANDLING UNIT
AL	ALUMINUM
AT	AMPERE TRIP
AWG	AMERICAN WIRE GAUGE
B1	BONNEVILLE POWERHOUSE ONE
B2	BONNEVILLE POWERHOUSE TWO
BCG	BARE COPPER GROUND
BIPTR	BRADFORD ISLAND PIT TAG ROOM
BKR	BREAKER
C	CONDUIT, CONTRACTOR, COLUMN
CIPTR	CASCADES ISLAND PIT TAG ROOM
CB	CIRCUIT BREAKER
CKT.	CIRCUIT
COMM	COMMUNICATION
CPU	CENTRAL PROCESSING UNIT
CRS	COATED RIGID STEEL CONDUIT
CTB	CONTROL TERMINAL BLOCK
DC	DIRECT CURRENT
DIA	DIAMETER
DPLX	DUPLEX
DS	DISCONNECT SWITCH
D/S	DOWNSTREAM
EL	ELEVATION
ELEC	ELECTRIC
ELEC HTR	COMPARTMENT HEATER
EXST	EXISTING
FDR	FEEDER
F.FU	FUSE
FLR	FLOOR
FLUOR	FLUORESCENT
F/O	FIBER OPTIC
GALV	GALVANIZED
GDACS	GENERAL DATA ACQUISITION/CONTROL SYSTEM
GEC	GROUNDING ELECTRODE CONDUCTOR
GFCI	GND FAULT CIRCUIT INTERRUPTER
GFE	GOV'T FURNISHED EQUIPMENT
GI	GROUND INSERT
GND	GROUND
HH	HANDHOLE
HID	HIGH INTENSITY DISCHARGE
HOA	HAND-OFF-AUTO
HPS	HIGH PRESSURE SODIUM
HVAC	HEATING, VENTILATING
HTR	HEATER
IC	INTERRUPTING CAPACITY
IG	ISOLATED GROUND
IL	INDICATING LIGHT
INCAND	INCANDESCENT
IND	INDICATION, INDICATING
J.JB	JUNCTION BOX
JMPR	JUMPER
KVA	KILO VOLT AMPS
KW	KILOWATTS
L	LINE, LOWER
LAN	LOCAL AREA NETWORK
LB	LABEL
LCS	LIGHTING CONTROL SWITCH
LGT	LIGHT
LS	LIMIT SWITCH
LT FLEX	LIQUID TIGHT FLEX CONDUIT
LTG	LIGHTING
MAX	MAXIMUM
MCB	MAIN CIRCUIT BREAKER
MH	MANHOLE, MONORAIL HOIST
MIN	MINIMUM
MLO	MAIN LUGS ONLY
MM	MULTIMODE (FIBER)
MR	MOTOR RELAYS AND CONTACTS
MT	MOUNT
MTD	MOUNTED
MTR HTR	MOTOR HEATER
MUX	MULTIPLEXER
N	NEUTRAL, NORTH
NO	NORMALLY OPEN
NP	NAMEPLATE
P	PULL
PB	PULL BOX, PUSH BUTTON
PB1	OPEN PUSHBUTTON
PB2	STOP PUSHBUTTON
PB3	CLOSE PUSHBUTTON
PC	PHOTOCELL, PERSONAL COMPUTER
PDB	POWER DISTRIBUTION BLOCK
PH	PHASE
PNL	PANEL
pr.	PAIR
PTB	POWER TERMINAL BLOCK
PTR	PIT TAG ROOM
PVC	POLYVINYL CHLORIDE CONDUIT
PWR	POWER
RCPT	RECEPTACLE
RGS	RIGID GALV STEEL CONDUIT
RV	REVERSE
S	SOUTH
SA	SURGE ARRESTOR
SB	SWITCHBOARD
SM	SINGLEMODE (FIBER)
S/N	SOLID NEUTRAL
SPDT	SINGLE-POLE DOUBLE-THROW
SPST	SINGLE-POLE SINGLE-THROW
SS	STAINLESS STEEL, SELECTOR SWITCH
SW	SWITCH
TB	TERMINAL BLOCK
TELE	TELEPHONE
TH.OL	THERMAL OVERLOAD CONTACTS
TS	TECHNICAL SPECIFICATIONS
TSP	TWISTED SHIELDED PAIR
TVSS	TRANSIENT VOLTAGE SURGE SUPRESSOR
TYP	TYPICAL
U	UPPER
UPS	UNINTERRUPTIBLE POWER SUPPLY
UTP	UNSHIELDED TWISTED PAIR (PHONE)
W	WATT, WIRE
WP	WEATHERPROOF
WG	WEIR GATE
WGCP	WEIR GATE CONTROL PANEL
WT	WATERTIGHT
W/	WITH
XFMR	TRANSFORMER
XPL	EXISTING PANEL
YIL	YELLOW INDICATING LIGHT

NOTES:

1. CONCRETE ANCHORS SHALL BE THE ADHESIVE TYPE AND SHALL BE A MIN. OF 1/2" DIAMETER. ALL EXTERIOR ANCHORS SHALL BE STAINLESS STEEL AND INDOOR ANCHORS MAY BE CARBON STEEL. SEE NOTES ON SHEET S26 FOR ADDITIONAL REQUIREMENTS.

US Army Corps of Engineers
Portland District

Revision	Date	Description	By
		CLARIFICATIONS - REVISED MATERIAL LIST EST. QUANTITIES AND REMARKS	DK

Designed by: B. BANNISTER
Drawn by: J. ANDERSON
Checked by: D. KWONG
Date: 08 AUGUST 2002
CADD File Name: jde001f12e01.dgn
Technical Manager: J. HURT
Submitted by: DUNCAN KWONG, P.E. Chief, Electrical Design

U.S. ARMY ENGINEER DISTRICT
CORPS OF ENGINEERS
PORTLAND, OREGON

COLUMBIA RIVER — OREGON - WASHINGTON
JOHN DAY LOCK AND DAM
SOUTH SHORE FISH LADDER
FISH LADDER IMPROVEMENTS
ELECTRICAL — GENERAL

GENERAL NOTES AND LEGEND

DRAWING STATUS: FINAL

DRAWING NO. JDF-6-12/ 1

SHEET E1

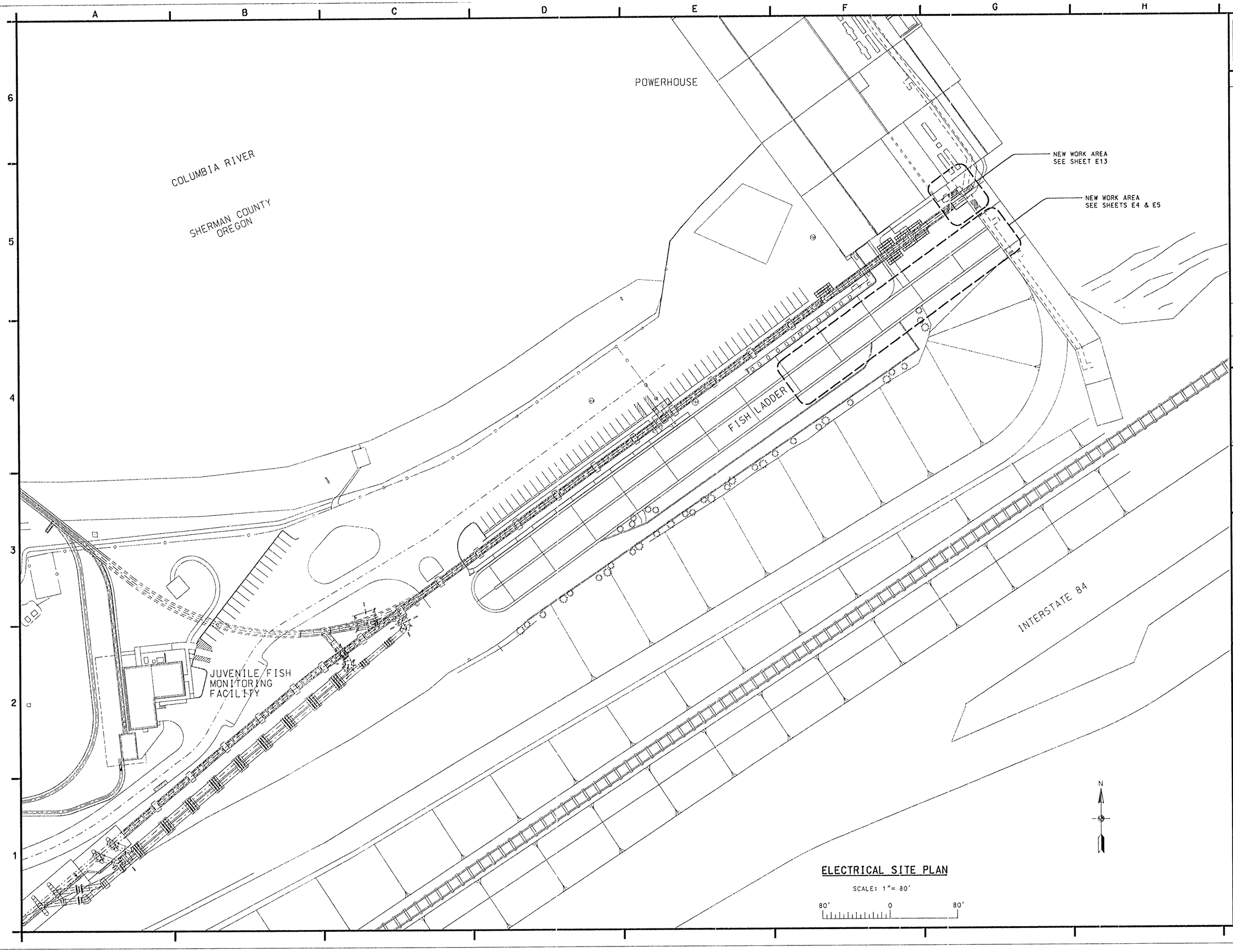

US Army Corps of Engineers
Portland District

Revision	Date	Description	By

Designed by: B. BANNISTER
Drawn by: B. BANNISTER
Checked by: D. KWONG
Date: 08 AUGUST 2002
CADD File Name: jda002f12c01.dgn
Technical Manager: J. HURT
Submitted by: DUNCAN KWONG, P.E. Chief, Electrical Design

U.S. ARMY ENGINEER DISTRICT
CORPS OF ENGINEERS
PORTLAND, OREGON

COLUMBIA RIVER — OREGON - WASHINGTON
JOHN DAY LOCK AND DAM
SOUTH SHORE FISH LADDER
FISH LADDER IMPROVEMENTS
WEIR RECONSTRUCTION
ELECTRICAL

ELECTRICAL SITE PLAN

DRAWING STATUS:
FINAL

DRAWING NO.
JDF-6-12/2

SHEET
E2

LIGHTING PANEL DR11	LOCATION: S. SHORE FISH LADDER	ENCLOSURE TYPE (NEMA 250): 4 SS	AIC: 14K
BUS VOLTS: 208	PHASE: 3	■ MAIN CB: 80A	☐ ISO GND ■ SURF MTD
BUS AMPS: 100	WIRES: 4+G	☐ MAIN LUGS	☐ FEED THRU ☐ FLUSH MTD

CKT NO	DESCRIPTION	LOAD VA A	LOAD VA B	LOAD VA C	CB A/P	CB A/P	LOAD VA A	LOAD VA B	LOAD VA C	DESCRIPTION	CKT NO
1	WEIR GATE 12	1476			20 / 1	20 / 1	1476			WEIR GATE 13	2
3	WEIR GATE 14		1476		20 / 1	20 / 1		1476		WEIR GATE 15	4
5	WEIR GATE 16			1476	20 / 1	20 / 1			1476	WEIR GATE 17U	6
7	WEIR GATE 17L	1476			20 / 1	20 / 1	1476			WEIR GATE 18U	8
9	WEIR GATE 18L		1476		20 / 1	20 / 1		1476		WEIR GATE 19U	10
11	WEIR GATE 19L			1476	20 / 1	20 / 1			1476	WEIR GATE 20U	12
13	WEIR GATE 20L	1476			20 / 1	20 / 1	1476			WEIR GATE 21U	14
15	WEIR GATE 21L		1476		20 / 1	20 / 1		1476		WEIR GATE 22U	16
17	WEIR GATE 22L			1476	20 / 1	20 / 1			1476	WEIR GATE 23U	18
19	WEIR GATE 23L	1476			20 / 1	20 / 1	200			DIFF 5 LEVEL XMTR	20
21	SPARE		–		20 / 1	20 / 1		500		CONTROL POWER	22
23	SPARE			–	20 / 1	20 / 1			1080	EXTERIOR RECEPT	24 *
25	SPACE	–					–			SPACE	26
27	SPACE		–					–		SPACE	28
29	SPACE			–					–	SPACE	30
	CONNECTED VA	5904	4428	4428			4628	4928	5508	CONNECTED VA	
	TOTAL CONNECTED VA	10532	9356	9936			6399	5564	4644	TOTAL DEMANDED VA	

NOTE: SQUARE D NQOD SERIES OR APPROVED EQUAL

* GFCI CIRCUIT BREAKER

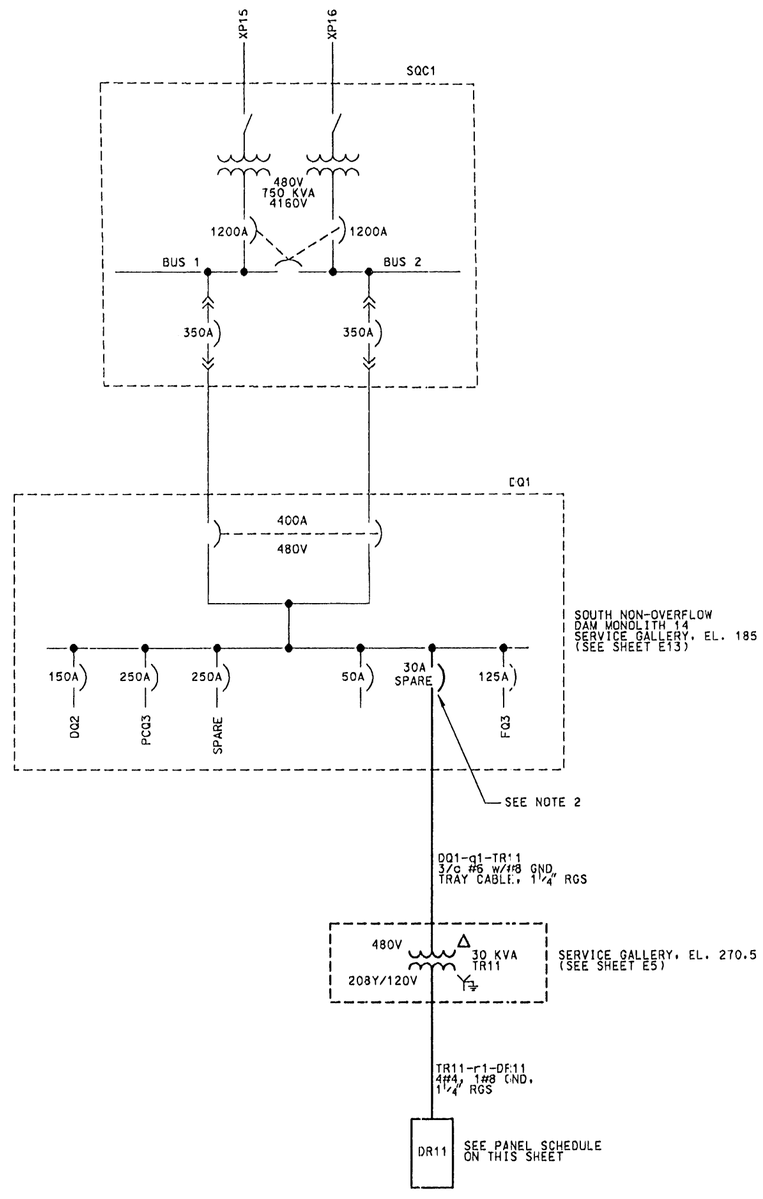

ONE-LINE DIAGRAM

NOTES:

1. ALL ITEMS IN BOLD ARE NEW. ALL OTHER ITEMS ARE EXISTING.
2. REMOVE EXISTING 30A CIRCUIT BREAKER AND INSTALL A NEW 50A, 3-POLE CIRCUIT BREAKER. CONTRACTOR SHALL FIELD VERIFY THE EXISTING SPARE BREAKER INTERRUPTING RATINGS AND PROVIDE BREAKER WITH SAME RATINGS.

US Army Corps of Engineers
Portland District

Revision	Date	Description	By

Designed by: B. BANNISTER
Date: 08 AUGUST 2002
Drawn by: B. BANNISTER
CADD File Name: bd6003r12e01.dgn
Checked by: D. KWONG
Technical Manager: J. HURT
Submitted by: DUNCAN KWONG, P.E. Chief, Electrical Design

U.S. ARMY ENGINEER DISTRICT
CORPS OF ENGINEERS
PORTLAND, OREGON

COLUMBIA RIVER — OREGON – WASHINGTON
JOHN DAY LOCK AND DAM
SOUTH SHORE FISH LADDER
FISH LADDER IMPROVEMENTS — BRADFORD ISLAND
ELECTRICAL
ONE-LINE DIAGRAM AND PANEL SCHEDULE

DRAWING STATUS: FINAL

DRAWING NO. JDF-6-12/ 3

SHEET E3

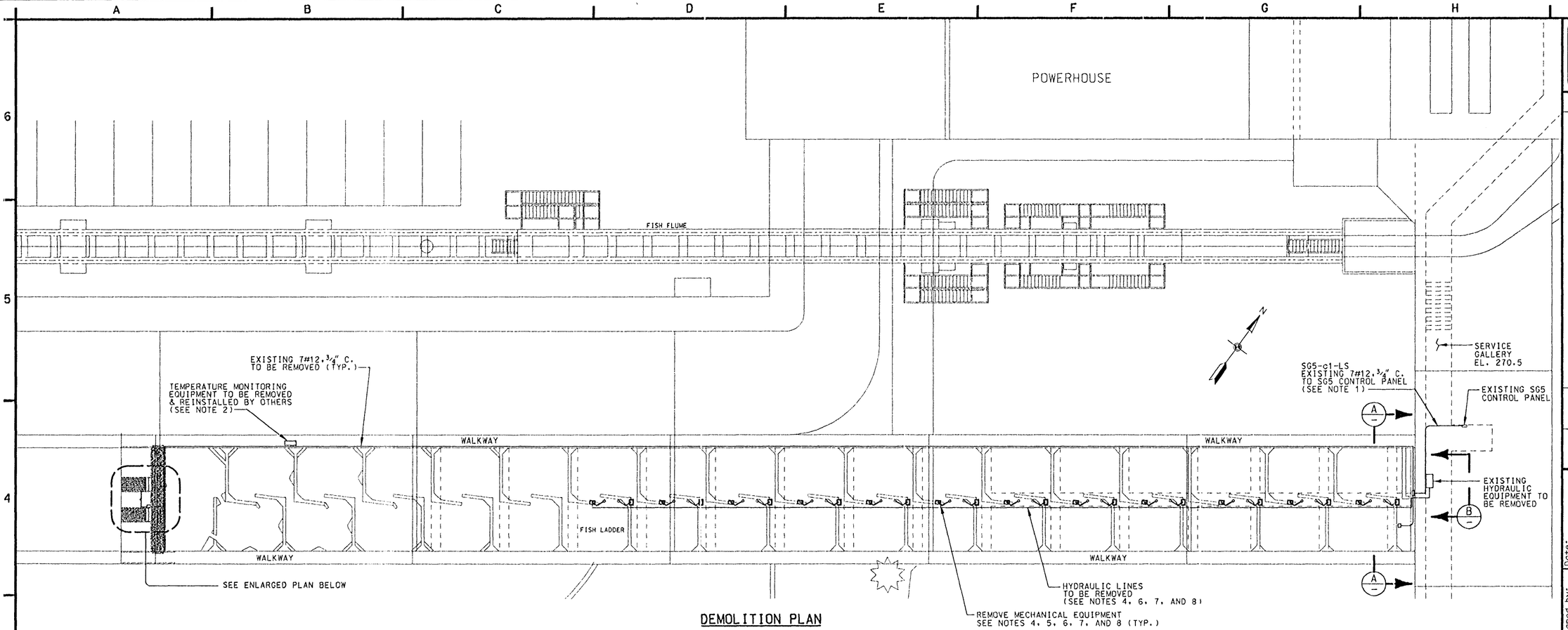

DEMOLITION PLAN

SCALE: 1"= 20'

20' 0 20'

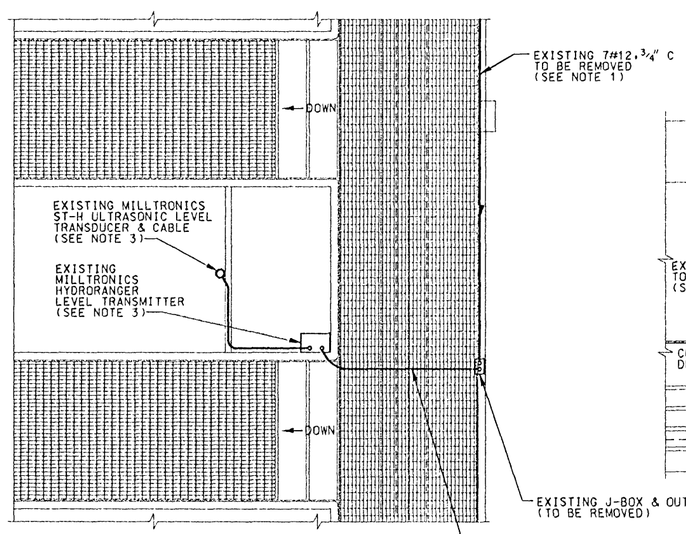

ENLARGED PLAN

SCALE: 3/8"= 1'-0"

12" 0 2' 4' 6'

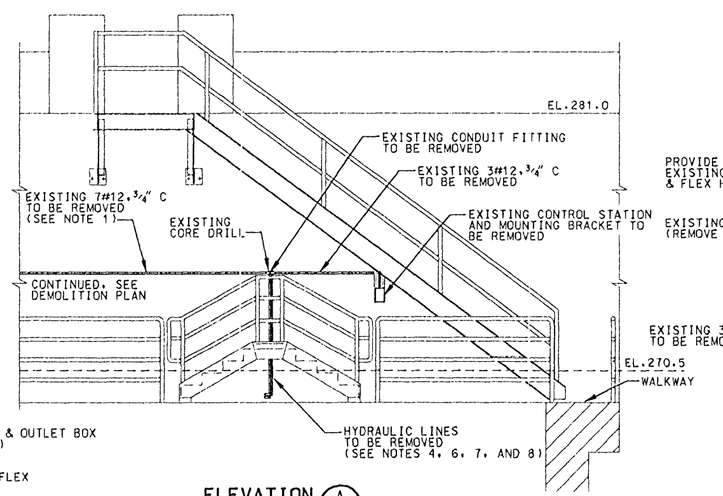

ELEVATION A

SCALE: 1" = 5'

5' 0 5'

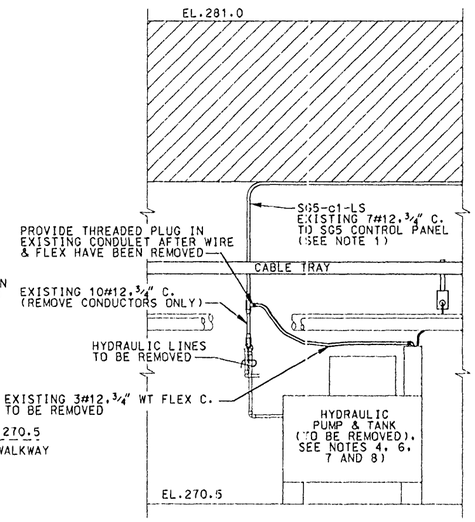

SERVICE GALLERY

ELEVATION B

SCALE: 3/8"= 1'-0"

12" 0 2' 4' 6'

NOTES:

1. REMOVE EXISTING CONDUCTORS BACK TO SG5 CONTROL PANEL. TWO OF THE CONDUCTORS (RED & WHITE) ARE CIRCUIT DR9-r20. THESE WILL BE REMOVED PERMANENTLY. THE OTHER FIVE CONDUCTORS WILL BE REMOVED & NEW CONDUCTORS WILL BE INSTALLED AND RECONNECTED TO THE EXISTING TERMINATIONS AFTER THE NEW CONDUIT HAS BEEN INSTALLED TO THE RELOCATED LEVEL TRANSMITTER.
2. THE CONTRACTOR SHALL COORDINATE WITH THE PROJECT TO HAVE ANY EXISTING TEMPERATURE OR RADIO TRACKING EQUIPMENT REMOVED.
3. THE CONTRACTOR SHALL REMOVE AND REINSTALL THE EXISTING LEVEL SENSOR AND TRANSMITTER AS SHOWN. PRIOR TO REMOVAL, THE CONTRACTOR SHALL RECORD ALL SET POINTS AND RECALIBRATE THE TRANSMITTER AFTER REINSTALLATION. USER'S MANUALS FOR BOTH WILL BE PROVIDED BY THE GOV'T.
4. REMOVE ALL HYDRAULIC CYLINDERS, VALVES, SUPPLY AND RETURN LINES, HYDRAULIC TANK AND HOSES ALONG WITH CYLINDER SUPPORTS AND ALL ASSOCIATED HARDWARE.
5. REMOVE OPERATING ARM, SHAFT WITH SILL GATE, UPPER, MIDDLE AND LOWER BEARINGS WITH ASSOCIATED HARDWARE.
6. ALL ELECTRICAL AND MECHANICAL EQUIPMENT TO BECOME THE PROPERTY OF THE CONTRACTOR.
7. HYDRAULIC FLUIDS SHALL BE DRAINED IN ACCORDANCE WITH ENVIRONMENTAL SPECS 01355.
8. SEE MECHANICAL INFORMATIONAL DRAWINGS JDF-13-4/25-28

US Army Corps of Engineers
Portland District

Revision	Date	Description	By

Designed by: B. BANNISTER
Drawn by: B. BANNISTER
Checked by: D. KWONG
Submitted by: DUNCAN KWONG, P.E. Chief, Electrical Design
Date: 08 AUGUST 2002
CADD File Name: jde0042f12-01.dgn
Technical Manager: J. HURT

U.S. ARMY ENGINEER DISTRICT
CORPS OF ENGINEERS
PORTLAND, OREGON

COLUMBIA RIVER — OREGON - WASHINGTON
JOHN DAY LOCK AND DAM
SOUTH SHORE FISH LADDER
FISH LADDER IMPROVEMENTS
WEIR RECONSTRUCTION
ELECTRICAL

ELECTRICAL & MECHANICAL DEMOLITION PLAN

DRAWING STATUS: FINAL

DRAWING NO. JDF-6-12/4

SHEET E4

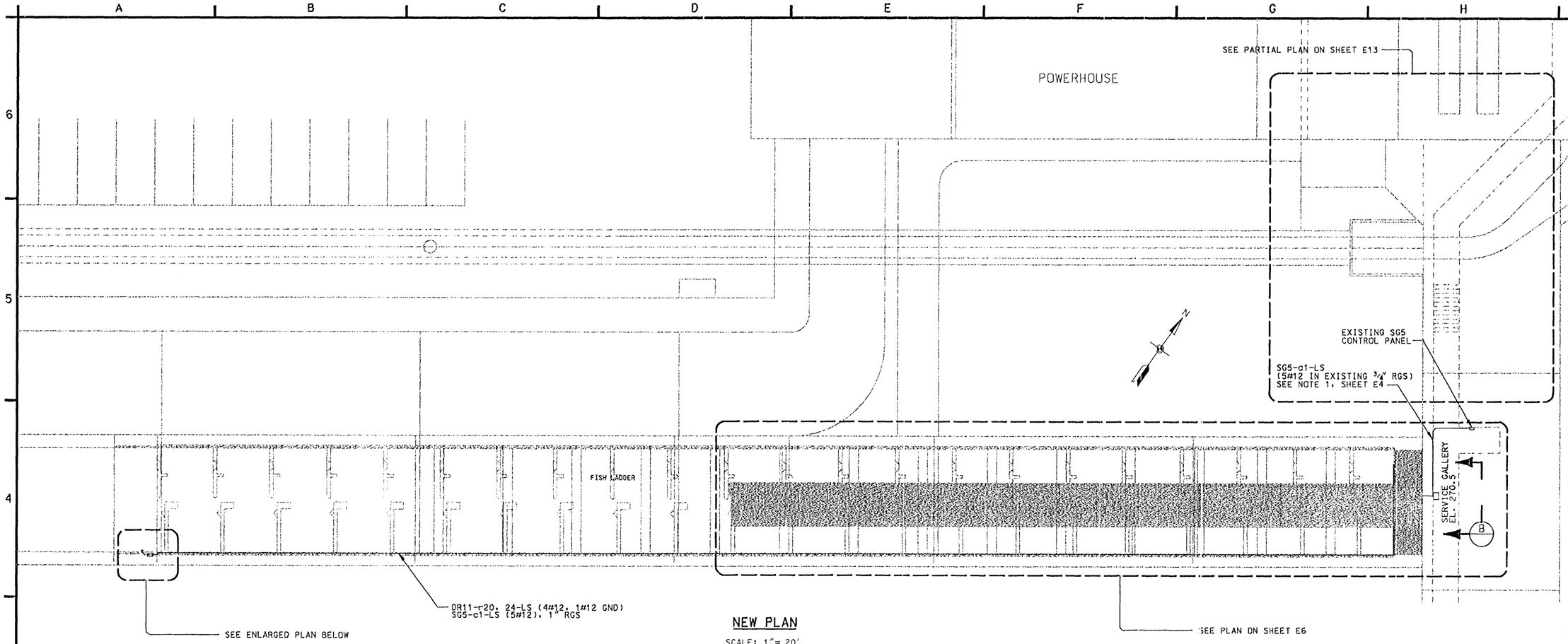

NEW PLAN

SCALE: 1"= 20'

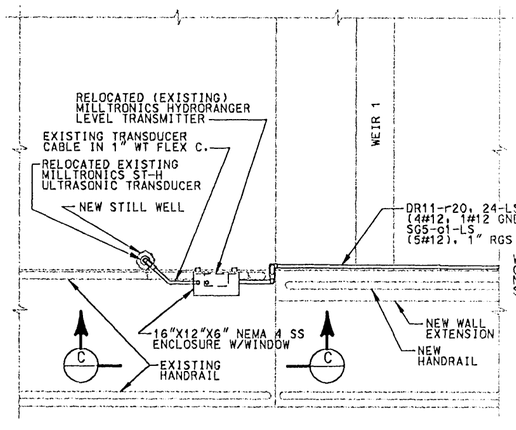

ENLARGED PLAN

SCALE: 3/8"= 1'-0"

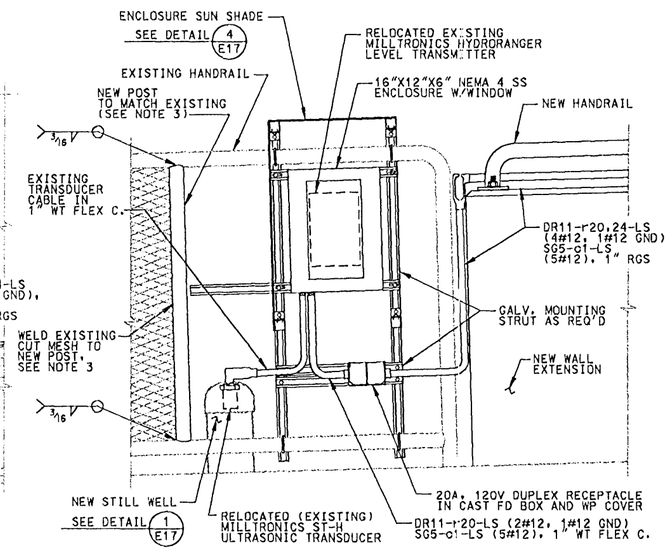

ELEVATION C

SCALE: 3/4"= 1'-0"

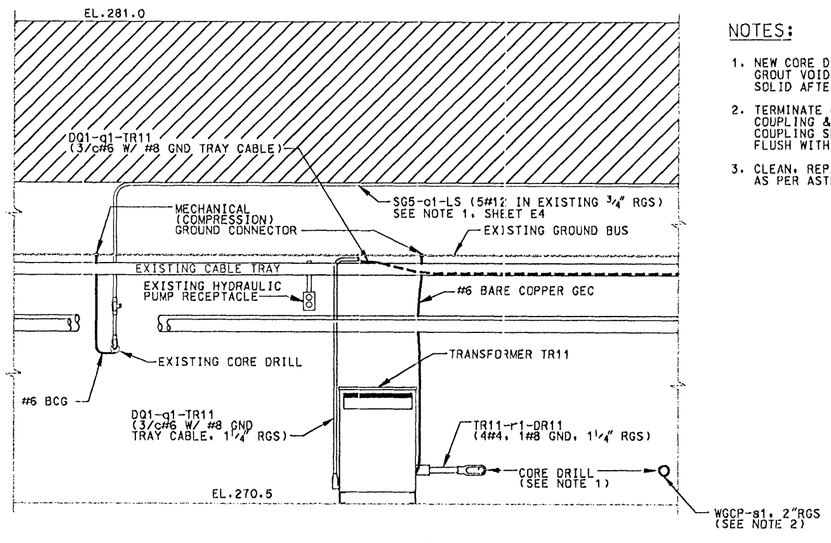

SERVICE GALLERY

ELEVATION B

SCALE: 3/8"= 1'-0"

NOTES:

1. NEW CORE DRILLS SIZED AS REQUIRED. GROUT VOIDS AROUND CONDUITS SOLID AFTER INSTALLATION.
2. TERMINATE CONDUIT WITH RGS COUPLING & THREADED BRASS PLUG. COUPLING SHOULD BE INSTALLED FLUSH WITH GALLERY WALL.
3. CLEAN, REPAIR, AND PAINT WELDS AS PER ASTM A780

US Army Corps of Engineers
Portland District

Revision	Date	Description	By

Designed by: B. BANNISTER
Drawn by: B. BANNISTER
Checked by: D. KWONG
Date: 08 AUGUST 2002
CADD File Name: jde005f12c01.dgn
Technical Manager: J. HURT
Submitted by: DUNCAN KWONG, P.E. Chief, Electrical Design

U.S. ARMY ENGINEER DISTRICT
CORPS OF ENGINEERS
PORTLAND, OREGON

COLUMBIA RIVER — OREGON - WASHINGTON
JOHN DAY LOCK AND DAM
SOUTH SHORE FISH LADDER
FISH LADDER IMPROVEMENTS
WEIR RECONSTRUCTION
ELECTRICAL
ELECTRICAL INSTALLATION PLAN

DRAWING STATUS: FINAL

DRAWING NO. JDF-6-12/5

SHEET E5

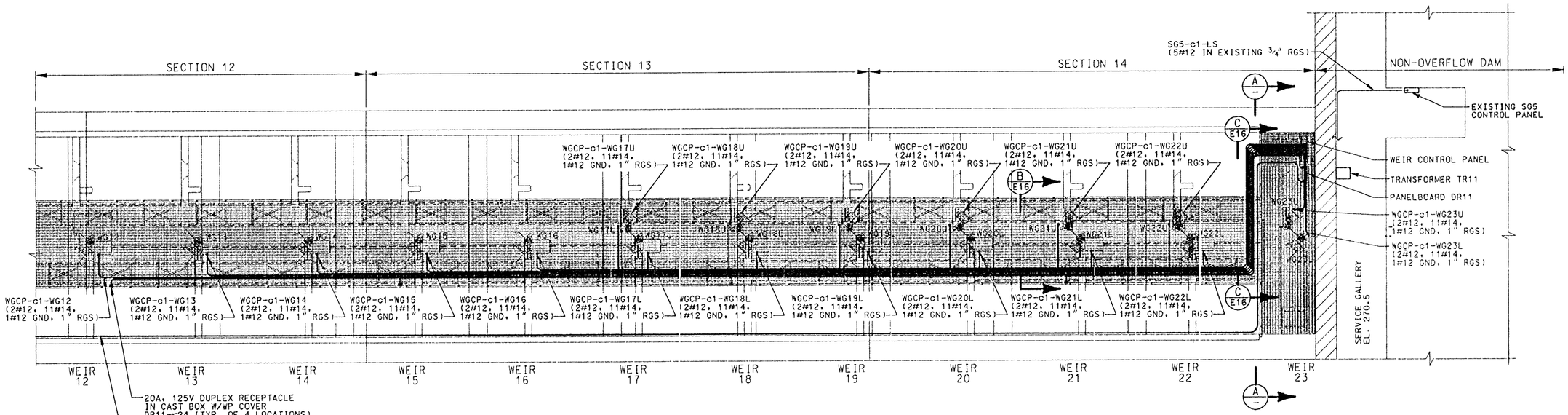

PLAN - WEIRS 12 TO 23

SECTIONS 12 - 14

SCALE: 3/32" = 1'-0"

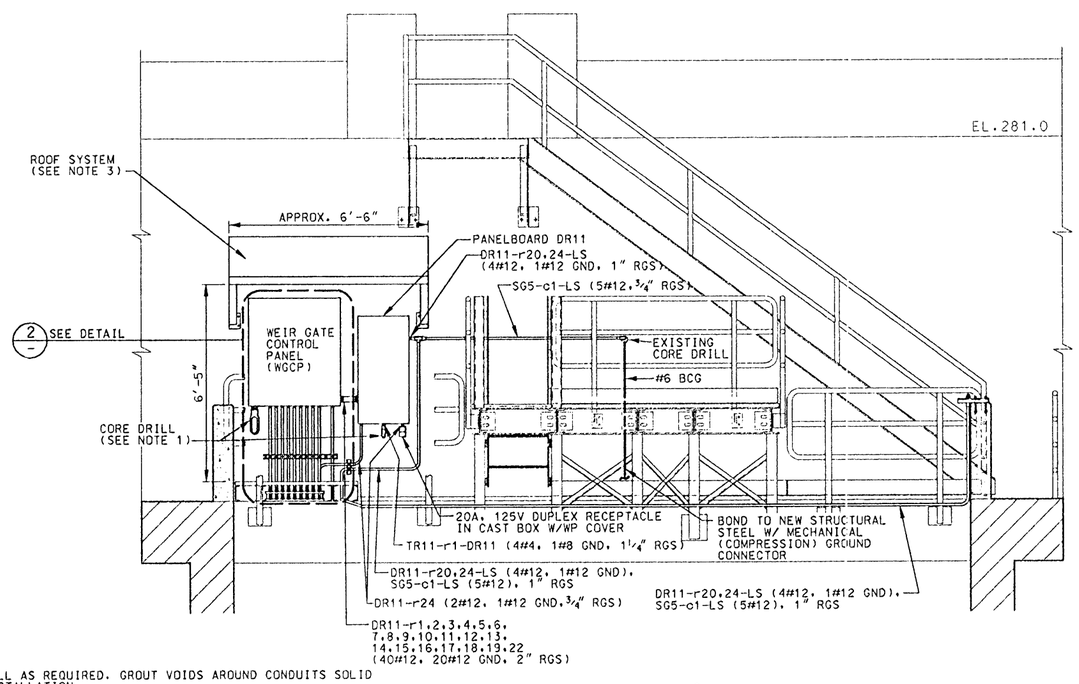

ELEVATION A

SCALE: 1/4" = 1'-0"

12" 0 5'

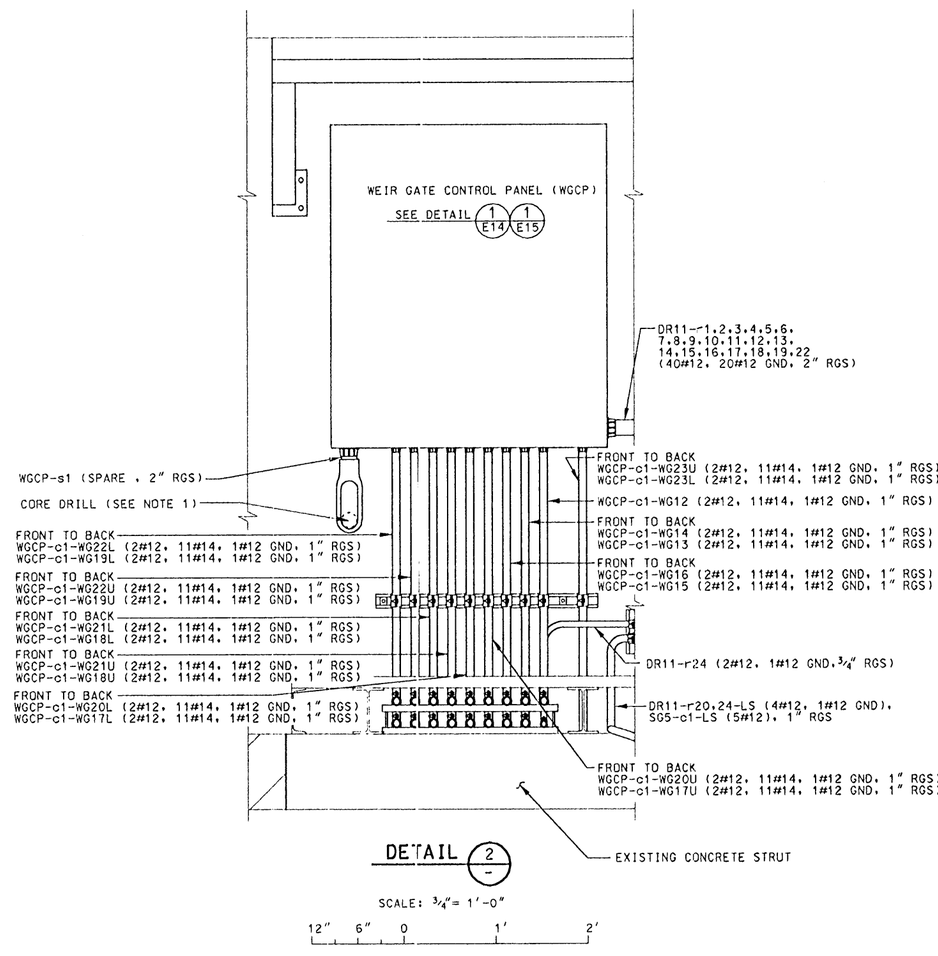

DETAIL 2

SCALE: 3/4" = 1'-0"

12" 6" 0 1' 2'

NOTES:

1. CORE DRILL AS REQUIRED. GROUT VOIDS AROUND CONDUITS SOLID AFTER INSTALLATION.
2. EXPANSION COUPLINGS ARE REQUIRED AT ALL EXPANSION JOINTS. SEE SHEETS S6-S8 FOR LOCATIONS.
3. CONTRACTOR SHALL DESIGN A ROOF OVER BOTH ELECTRICAL PANELS, THAT SHALL INCLUDE ALL ROOF SUPPORTS, COVERING, CONNECTIONS AND ANCHORAGE. EXPECTED LOADS ON THE ROOF ARE: 20 PSF SNOW LOAD, 30 PSF WIND LOAD (ANY DIRECTION), SEISMIC (MCE PGA=0.19), AND ALL DEAD LOADS. SLOPE ROOF TO MISS STAIRWAY SUPPORTS ABOVE. THE ROOF SHALL BE FABRICATED FROM EITHER STEEL OR ALUMINUM. IF THE ROOF FRAMING MATERIAL IS DIFFERENT THAN THE ROOF SHEATHING MATERIAL, THEN THE TWO MATERIALS SHALL BE GALVANICALLY ISOLATED. CONTRACTOR SHALL PICK MATERIALS TO RESIST CORROSION OR PROTECT AGAINST CORROSION WITH A PROTECTIVE COATING. ROOF SHALL BE FINISHED SO THAT THERE ARE NO SHARP OR JAGGED EDGES. ROOF SHALL BE SEALED AGAINST CONCRETE WALL SO THAT NO WATER CAN RUN BETWEEN THE TWO. ROOF SUPPORT MEMBERS SHALL NOT INTERFERE WITH PANEL DOOR OPENING. DOORS MUST BE ABLE TO OPEN AT LEAST 90 DEGREES. CONTRACTOR SHALL SUBMIT DRAWINGS AND CALCULATIONS FOR GOVERNMENT APPROVAL.

US Army Corps of Engineers
Portland District

Revision	Date	Description	By

Designed by: B. BANNISTER
Drawn by: B. BANNISTER
Checked by: D. KWONG
Submitted by: DUNCAN KWONG, P.E. Chief, Electrical Design
Date: 08 AUGUST 2002
CADD File Name: jde006f12c01.dgn
Technical Manager: J. HURT

U.S. ARMY ENGINEER DISTRICT
CORPS OF ENGINEERS
PORTLAND, OREGON

COLUMBIA RIVER — OREGON - WASHINGTON
JOHN DAY LOCK AND DAM
SOUTH SHORE FISH LADDER
FISH LADDER IMPROVEMENTS — WEIR RECONSTRUCTION
ELECTRICAL
PLAN
WEIRS 12 - 23

DRAWING STATUS: FINAL

DRAWING NO. JDF-6-12/6

SHEET E6

GATE SHOWN IN FULL OPEN POSITION

ROTOR	CONTACT	LIMIT SWITCH CONTACT DEVELOPMENT — GATE POSITION (FULLY OPEN, A, B, FULLY CLOSED)	FUNCTION	
OPEN	1		BY-PASS CIR.	
	2		SPARE	
	3		IND LIGHT	
	4		OPEN LIMIT	
CLOSE	5		BY-PASS CIR	
	6		SPARE	
	7		IND LIGHT	
	8		CLOSE LIMIT	
INT.1	9		REM IND LGT	SEE NOTE 2
	10		SPARE	
	11		SPARE	
	12		SPARE	
INT.2	13		REM IND LGT	SEE NOTE 2
	14		SPARE	
	15		SPARE	
	16		SPARE	

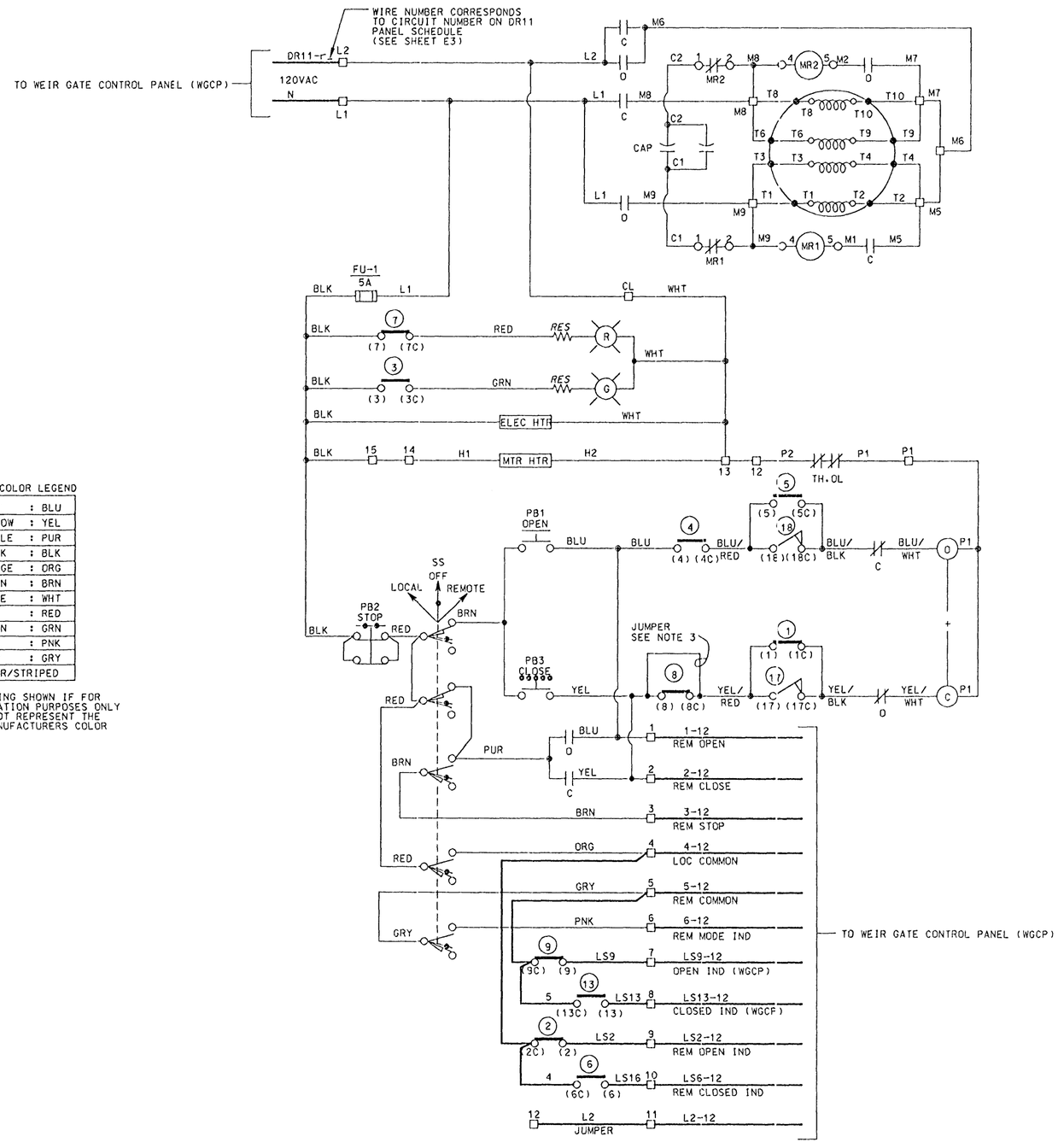

WIRE COLOR LEGEND

BLUE	: BLU
YELLOW	: YEL
PURPLE	: PUR
BLACK	: BLK
ORANGE	: ORG
BROWN	: BRN
WHITE	: WHT
RED	: RED
GREEN	: GRN
PINK	: PNK
GRAY	: GRY
COLOR/STRIPED	

NOTE:
COLOR CODING SHOWN IF FOR IDENTIFICATION PURPOSES ONLY AND MAY NOT REPRESENT THE ACTUAL MANUFACTURERS COLOR CODING

NOTES:

1. CONTROL SCHEMATIC SHOWN REPRESENTS A TYPICAL MANUFACTURERS DRAWING. ALL BOLD LINES INDICATE FIELD WIRING. THE CONTRACTOR SHALL BE RESPONSIBLE FOR ALL WIRING SHOWN REGARDLESS OF WHETHER IT IS FACTORY OR FIELD WIRING.
2. ROTORS INT.1 & INT. 2 CAN BE SET AT GATE POSITION FULL OPEN, FULL CLOSED OR ANY POSITION IN BETWEEN. CONTACT 9 (LS9) SHALL BE FIELD SET TO CLOSE AT FULL OPEN AND CONTACT 13 (LS13) SHALL BE FIELD SET TO CLOSE AT FULL CLOSED.
3. ADD JUMPER ON LS8 FOR TORQUE SEATING GATES.
4. SEE SHEET E1 FOR SYMBOL LEGEND & ABBREVIATIONS.

TYPICAL GATE ACTUATOR CONTROL SCHEMATIC

US Army Corps of Engineers
Portland District

Revision	Date	Description	By

Designed by: B. BANNISTER
Date: 08 AUGUST 2002
Drawn by: B. BANNISTER
CADD File Name: jde007f12c001.dgn
Checked by: D. KWONG
Technical Manager: J. HURT
Submitted by: DUNCAN KWONG, P.E. Chief, Electrical Design

U.S. ARMY ENGINEER DISTRICT
CORPS OF ENGINEERS
PORTLAND, OREGON

COLUMBIA RIVER — OREGON - WASHINGTON
JOHN DAY LOCK AND DAM
SOUTH SHORE FISH LADDER
FISH LADDER IMPROVEMENTS — WEIR RECONSTRUCTION
ELECTRICAL
TYPICAL GATE OPERATOR CONTROL SCHEMATIC

DRAWING STATUS: FINAL

DRAWING NO. JDF-6-12/7

SHEET E7

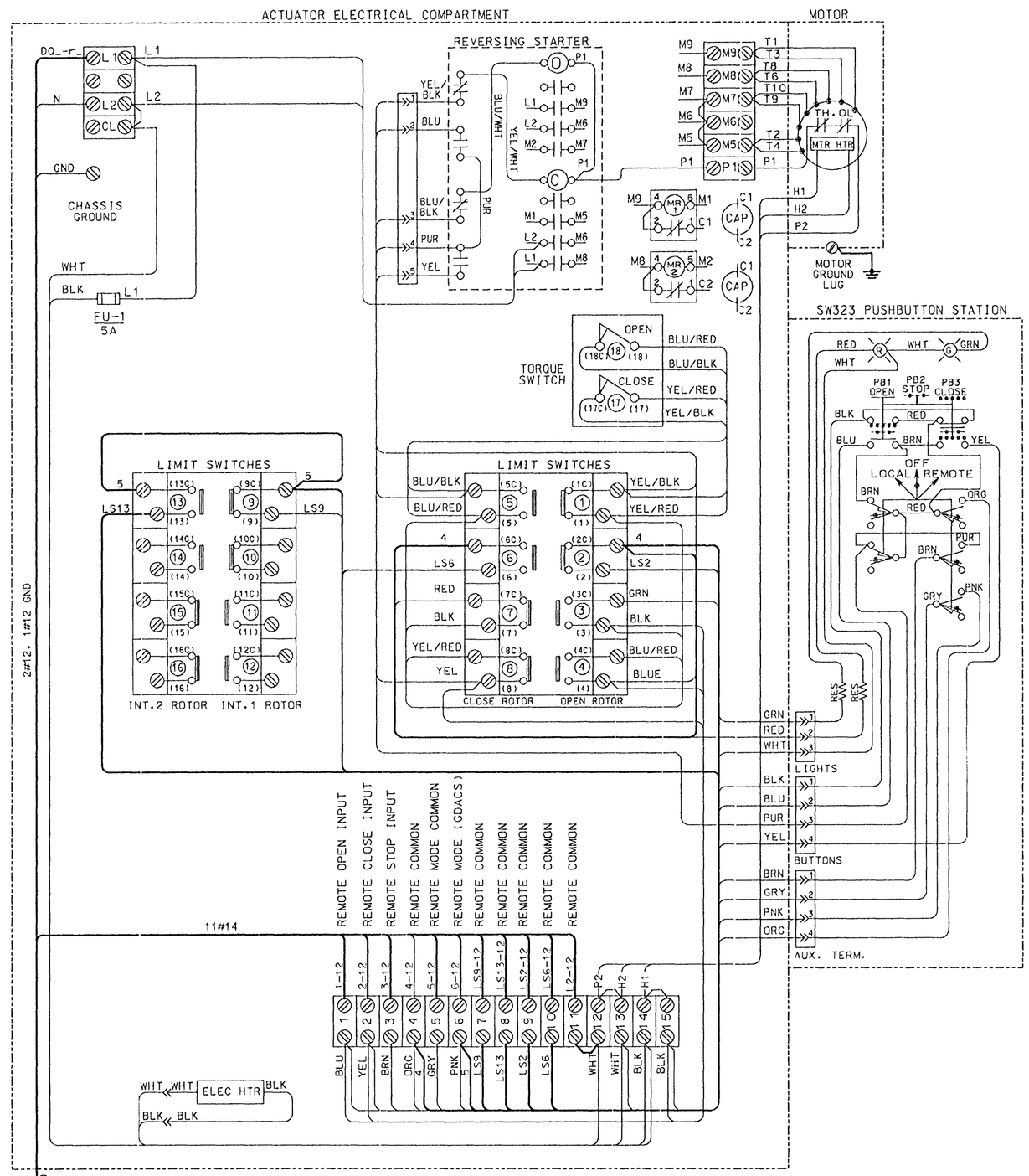

WIRE COLOR LEGEND

BLUE	: BLU
YELLOW	: YEL
PURPLE	: PUR
BLACK	: BLK
ORANGE	: ORG
BROWN	: BRN
WHITE	: WHT
RED	: RED
GREEN	: GRN
PINK	: PNK
GRAY	: GRY
COLOR/STRIPED	

NOTE:
COLOR CODING SHOWN IF FOR IDENTIFICATION PURPOSES ONLY AND MAY NOT REPRESENT THE ACTUAL MANUFACTURERS COLOR CODING

NOTES

1. WIRING DIAGRAM SHOWN REPRESENTS A TYPICAL MANUFACTURERS DRAWING. ALL BOLD LINES INDICATE FIELD WIRING. THE CONTRACTOR SHALL BE RESPONSIBLE FOR ALL WIRING SHOWN REGARDLESS OF WHETHER IT IS FACTORY OR FIELD WIRING.
2. ROTORS INT.1 & INT. 2 CAN BE SET AT GATE POSITION FULL OPEN, FULL CLOSED OR ANY POSITION IN BETWEEN. CONTACT 9 (LS9) SHALL BE FIELD SET TO CLOSE AT FULL OPEN AND CONTACT 13 (LS13) SHALL BE FIELD SET TO CLOSE AT FULL CLOSED.
3. SEE SHEET E1 FOR SYMBOL LEGEND & ABBREVIATIONS.

TYPICAL GATE ACTUATOR WIRING DIAGRAM

FIELD WIRING NUMBERS (LABELS) SHOWN ARE FOR GATE 12
SEE SHEETS E9 - E12 FOR COMPLETE LIST OF WIRE NUMBERS

US Army Corps of Engineers
Portland District

Revision	Date	Description	By

Designed by: B. BANNISTER
Date: 08 AUGUST 2002
Drawn by: B. BANNISTER
CADD File Name: jde008f12c001.dgn
Checked by: D. KWONG
Technical Manager: J. HURT
Submitted by: DUNCAN KWONG, P.E. Chief, Electrical Design

U.S. ARMY ENGINEER DISTRICT
CORPS OF ENGINEERS
PORTLAND, OREGON

COLUMBIA RIVER — OREGON - WASHINGTON
JOHN DAY LOCK AND DAM
SOUTH SHORE FISH LADDER
FISH LADDER IMPROVEMENTS — WEIR RECONSTRUCTION
ELECTRICAL
TYPICAL GATE OPERATOR WIRING DIAGRAM

DRAWING STATUS: FINAL

DRAWING NO. JDF-6-12/8

SHEET E8