US Army Corps
of Engineers
Portland District

PUBLIC NOTICE
for Permit Application

Issue Date: July 27, 2004
Expiration Date: August 25, 2004
Corps of Engineers Action ID: 200400469
30-Day Notice **Oregon Department of State Lands Number:** 32681-RP

Interested parties are hereby notified that an application has been received for a Department of the Army permit for certain work in waters of the United States, as described below and shown on the attached plan.

Comments: Comments on the described work should reference the U.S. Army Corps of Engineers number shown above and reach this office no later than the above expiration date of this Public Notice to become part of the record and considered in the decision. Comments should be mailed to the following address:

U.S. Army Corps of Engineers
CENWP-OP-GE (Ms. Lisa Grudzinski)
2201 North Broadway, Suite C
North Bend, Oregon 97459-2372

Applicant: Harry and Victoria Davis, Ronald Foord, and Margaret Gajda

Location: The project is located in North Slough and adjacent ditches, River Mile 1.0- 2.0, near North Bend, Coos County, Oregon. The site is in Section 12, 13, and 14 of Township 24 South, Range 13 West.

Project Description: The applicants are proposing to excavate up to 15,500 cubic yards (CY) of sediment and organics from 9,400 linear feet of North Slough and adjacent drainage ditches. Currently, water flow is restricted by accumulated sediment and adjacent fields are flooded up to three feet deep during winter months.

Sediment would be removed to restore the waterway to the original dimensions of two feet wide on the bottom, 10- 12 feet wide on the top, and 2-4 feet deep. The excavated material would be placed on existing, adjacent berms. The existing berms, two to four feet high and in various conditions, would be raised by two to four feet to prevent water from overtopping and entrapping fish in the adjacent fields. Excavated material would be placed on the berms to dry, then compacted in place before the winter rain begins. No new berms would be constructed. The work would be accomplished using a track hoe working from one side of the waterway. Some woody vegetation, including willow, would be removed or impacted as a result of the work.

Material excavated from the eastern end of the project area where there are no existing berms and excess material in the remainder of the project area not discharged onto existing berms would be thin-spread not greater than three-inches deep over the adjacent wetland pastures. Excavated material would be temporarily side-cast onto adjacent wetland pastures to dry before being thin-spread. Material would be thin-spread using a cat to push the dried material over the pasture.

Purpose: Excavate accumulated sediment from existing waterways to facilitate proper flow patterns and maintain pastures for grazing and hay production.

Drawing(s): Five (5) Drawings included.

Additional Information: Additional information may be obtained from Ms. Lisa Grudzinski, Project Manager, U.S. Army Corps of Engineers at (541) 756-5316 or lisa.a.grudzinski@nwp01.usace.army.mil.

Authority: This permit will be issued or denied under the following:

Section 10, Rivers and Harbors Act 1899 (33 U.S.C. 403), for work in or affecting navigable waters of the United States.

Section 404, Clean Water Act (33 U.S.C. 1344), for discharge of dredged or fill material into waters of the United States.

Sediment Testing: Sediment is composed primarily of silt and sand-sized particles, likely from localized sources such as upslope logging operations. The project area was last dredged approximately 15-17 years ago and is not expected to require future dredging for several years. Historically, the tidal portion of the project area was dredged for navigation until 1953. Commercial products such as "Round-up" and "Crossbow" are applied annually in small amounts to adjacent fields for weed control. A final decision regarding sediment testing is pending.

Water Quality Certification: A permit for the described work will not be issued until certification, as required under Section 401 of the Clean Water Act (P.L. 95-217), has been received or is waived from the certifying state. Attached is the state's notice advertising the request for certification.

Section 404(b)(1) Evaluation: The impact of the activity on the public interest will be evaluated in accordance with the Environmental Protection Agency guidelines pursuant to Section 404(b)(1) of the Clean Water Act.

Coastal Zone Management Act Certification: A permit for the described work will not be issued until the state has concurred with the applicant's certification that the described activity affecting land or water uses in the Coastal Zone complies with the State Coastal Zone Management Program. Section 307(c)(3) of the Coastal Zone Management Act of 1972, as amended by 16 U.S.C. 1456(c)(3) requires the applicant to provide a Certification of Consistency statement. If the state fails to concur or object to the certification statement within six months, state concurrence shall be conclusively presumed. Attached to this Public Notice is a notice of application for Certification of Consistency with the State's Coastal Zone Management Program.

Public Hearing: Any person may request in writing within the comment period specified in this notice that a public hearing be held to consider this application. Requests for public hearings shall state with particularity the reasons for holding a public hearing.

Essential Fish Habitat: Preliminary determinations indicate that the proposed activity may affect Essential Fish Habitat (EFH) as described under Section 305 of the Magnuson-Stevens Fishery Management and Conservation Act (MSA). Consultation under Section MSA as amended in 1996 will be initiated. A permit for the proposed activity will not be issued until the consultation process is completed.

Cultural Resources: The described activity is not located on property registered or eligible for registration in the latest published version of the National Register of Historic Places. This notice has been provided to the State Historic Preservation Office.

Evaluation: The decision whether to issue a permit will be based on an evaluation of the probable impact including cumulative impacts of the described activity on the public interest. That decision will reflect the national concern for both protection and utilization of important resources. The benefit, which reasonably may be expected to accrue from the described activity, must be balanced against its reasonably foreseeable detriments. All factors, which may be relevant to the described activity will be considered including the cumulative effects thereof; among those are conservation, economics, aesthetics, general environmental concerns, wetlands, historic properties, fish and wildlife values, flood hazards, floodplain values, land use, navigation, shoreline erosion and accretion, recreation, water supply and conservation, water quality, energy needs, safety, food and fiber production, mineral needs, consideration of property ownership and, in general, the needs and welfare of the people.

The Corps of Engineers is soliciting comments from the public; Federal, state, and local agencies and officials; Indian Tribes; and other interested parties in order to consider and evaluate the impacts of this proposed activity. Any comments received will be considered by the Corps of Engineers to determine whether to issue, modify, condition or deny a permit for this proposal. To make this decision, comments are used to assess impacts on endangered species, historic properties, water quality, general environmental effects, and the other public interest factors listed above. Comments are used in the preparation of an Environmental Assessment and/or an Environmental Impact Statement pursuant to the National Environmental Policy Act. Comments are also used to determine the need for a public hearing and to determine the overall public interest of the proposed activity.

Additional Requirements: State law requires that leases, easements, or permits be obtained for certain works or activity in the described waters. These State requirements must be met, where applicable, and a Department of the Army permit must be obtained before any work within the applicable Statutory Authority previously indicated may be accomplished. Other local governmental agencies may also have ordinances or requirements, which must be satisfied before the work is accomplished.

Oregon Department of Environmental Quality (DEQ)
Water Quality 401 Certification

Corps of Engineers Action ID Number: 200400469 **Notice Issued:** July 27, 2004
Oregon Department of State Lands Number: 32681-RP **Written Comments Due:** August 25, 2004

WHO IS THE APPLICANT: Harry and Victoria Davis, Ronald Foord, and Margaret Gajda

LOCATION OF CERTIFICATION ACTIVITY: See attached U.S. Army Corps of Engineers public notice.

WHAT IS PROPOSED: See attached U.S. Army Corps of Engineers public notice on the proposed project.

NEED FOR CERTIFICATION: Section 401 of the Federal Clean Water Act requires applicants for Federal permits or licenses to provide the Federal agency a water quality certification from the State of Oregon if the proposed activity may result in a discharge to surface waters.

DESCRIPTION OF DISCHARGES: See attached U.S. Army Corps of Engineers public notice on the proposed project.

WHERE TO FIND DOCUMENTS: Documents and related material are available for examination and copying at Oregon Department of Environmental Quality, Water Quality Division, 811 S.W. 6th Avenue, Portland, Oregon 97204-1390.

While not required, scheduling an appointment will ensure documents are readily accessible during your visit. To schedule an appointment please call Ms. Alice Kavajecz at (503) 229-6962.

Any questions on the proposed certification may be addressed to the 401 Program Coordinator at (503) 229-5845.

PUBLIC PARTICIPATION:
Public Hearing: Oregon Administrative Rule (OAR) 340-48-0020 (6) states that "The Director shall provide an opportunity for the applicant, any affected state, or any interested agency, person, or group of persons to request or petition for a public hearing with respect to certification applications. If the Director determines that new information may be produced thereby, a public hearing will be held prior to the Director's final determination. Instances of doubt shall be resolved in favor of holding the hearing. There shall be public notice of such a hearing."

Written comments:
Written comments on the proposed certification must be received at the Oregon Department of Environmental Quality by 5 p.m. on **August 25, 2004**. Written comments should be mailed to Oregon Department of Environmental Quality, Attn: 401 Program Coordinator, 811 S.W. 6th Avenue, Portland, Oregon 97204-1290 or faxed to (503) 229-6124. ***People wishing to send written comments via e-mail should be aware that if there is a delay between servers or if a server is not functioning properly, e-mails may not be received prior to the close of the public comment period.*** People wishing to send comments via e-mail should send them in Microsoft Word (through version 7.0), WordPerfect (through version 6.x) or plain text format to 401publiccoments@deq.state.or.us. Otherwise, due to conversion difficulties, DEQ recommends that comments be sent in hard copy.

WHAT HAPPENS NEXT: DEQ will review and consider all comments received during the public comment period. Following this review, the permit may be issued as proposed, modified, or denied. You will be notified of DEQ's final decision if you present either oral or written comments during the comment period. Otherwise, if you wish to receive notification, please call or write DEQ at the above address.

ACCESSIBILITY INFORMATION: This publication is available in alternate format (e.g. large print, Braille) upon request. Please contact DEQ Office of Communications and Outreach at (503) 229-5317 or toll free within Oregon at (800) 452-4011 to request an alternate format. People with a hearing impairment can receive help by calling DEQ's TTY at (503) 229-6993.

PUBLIC NOTICE
OREGON COASTAL MANAGEMENT PROGRAM
CONSISTENCY CERTIFICATION

Date: July 27, 2004

Corps of Engineers Action ID Number: 200400469
Oregon Department of State Lands Number: 32681-RP

NOTIFICATION
For projects subject to coastal zone review, notice is hereby given that the project is being reviewed by the Department of Land Conservation and Development (DLCD) as provided in Section 307(c) of the Coastal Zone Management Act. The applicant believes that the activities described in the attached materials would comply with and be conducted in a manner consistent with the Oregon Coastal Management Program. Project information can be made available for inspection at DLCD's Salem office.

DLCD is hereby soliciting public comments on the proposed project's consistency with the Oregon Coastal Management Program. Written comments may be submitted to DLCD, 635 Capitol St. NE, Suite 150, Salem, Oregon 97301-2540, attention consistency review specialist. Any comments must be received by DLCD on or before the comment deadline listed in the federal notice. For further information, you may call DLCD at (503) 373-0050, ext. 250.

REVIEW CRITERIA
Comments should address consistency with the applicable elements of the Oregon Coastal Management Program. These elements include the following:

- Acknowledged Local Comprehensive Plans & Implementing Ordinances
- Statewide Planning Goals
- Applicable State Authorities (e.g. Removal-Fill Law and Oregon Water Quality Standards)

INCONSISTENT?
If you believe this project is inconsistent with the Oregon Coastal Management Program, your comments to DLCD should explain why you believe the project is inconsistent and should identify the Oregon Coastal Management Program element(s) in question. You should also describe how the project could be modified if possible to make it consistent with the Oregon Coastal Management Program.

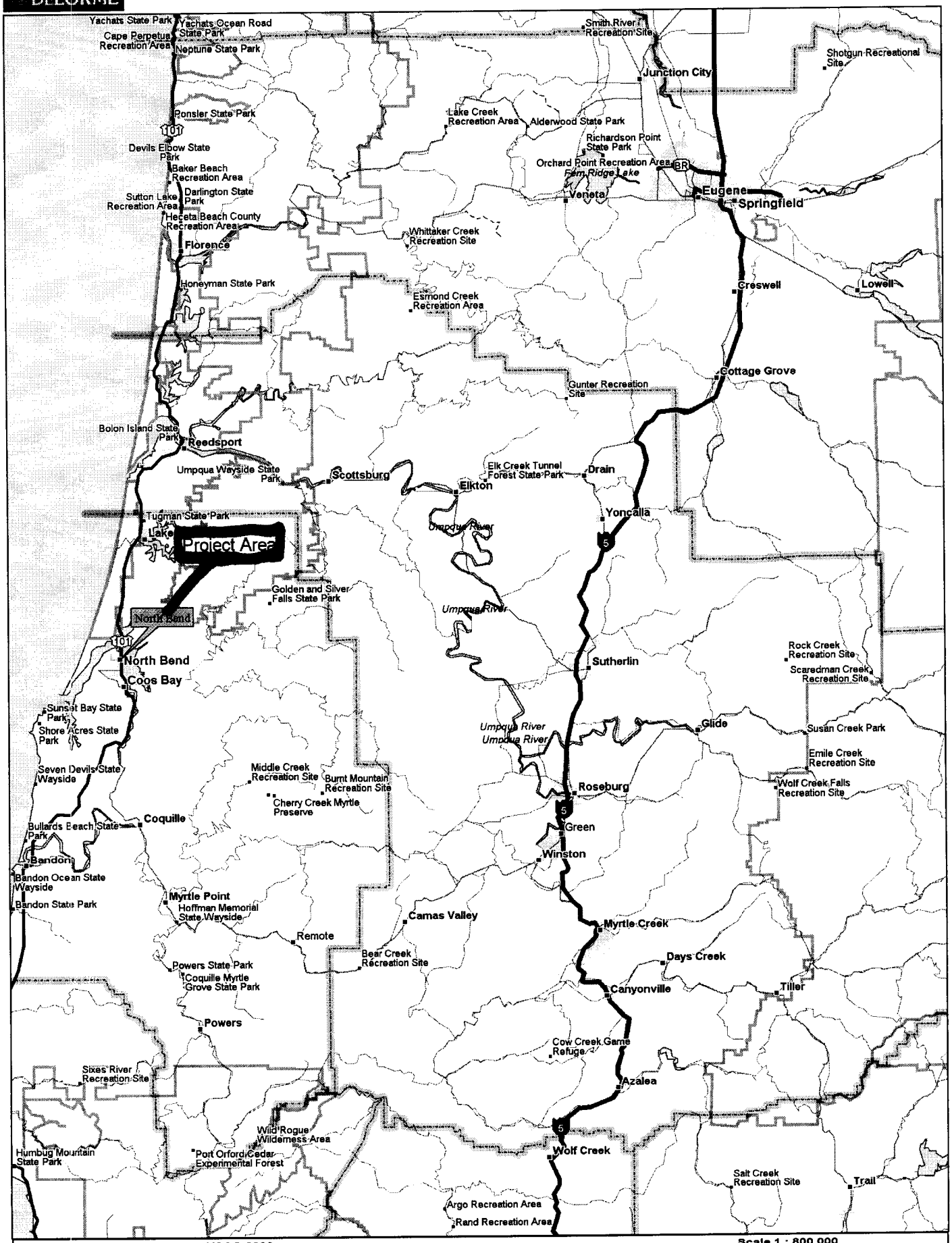

Harry & Victoria Davis
Ronald Foord
Margaret Gajda

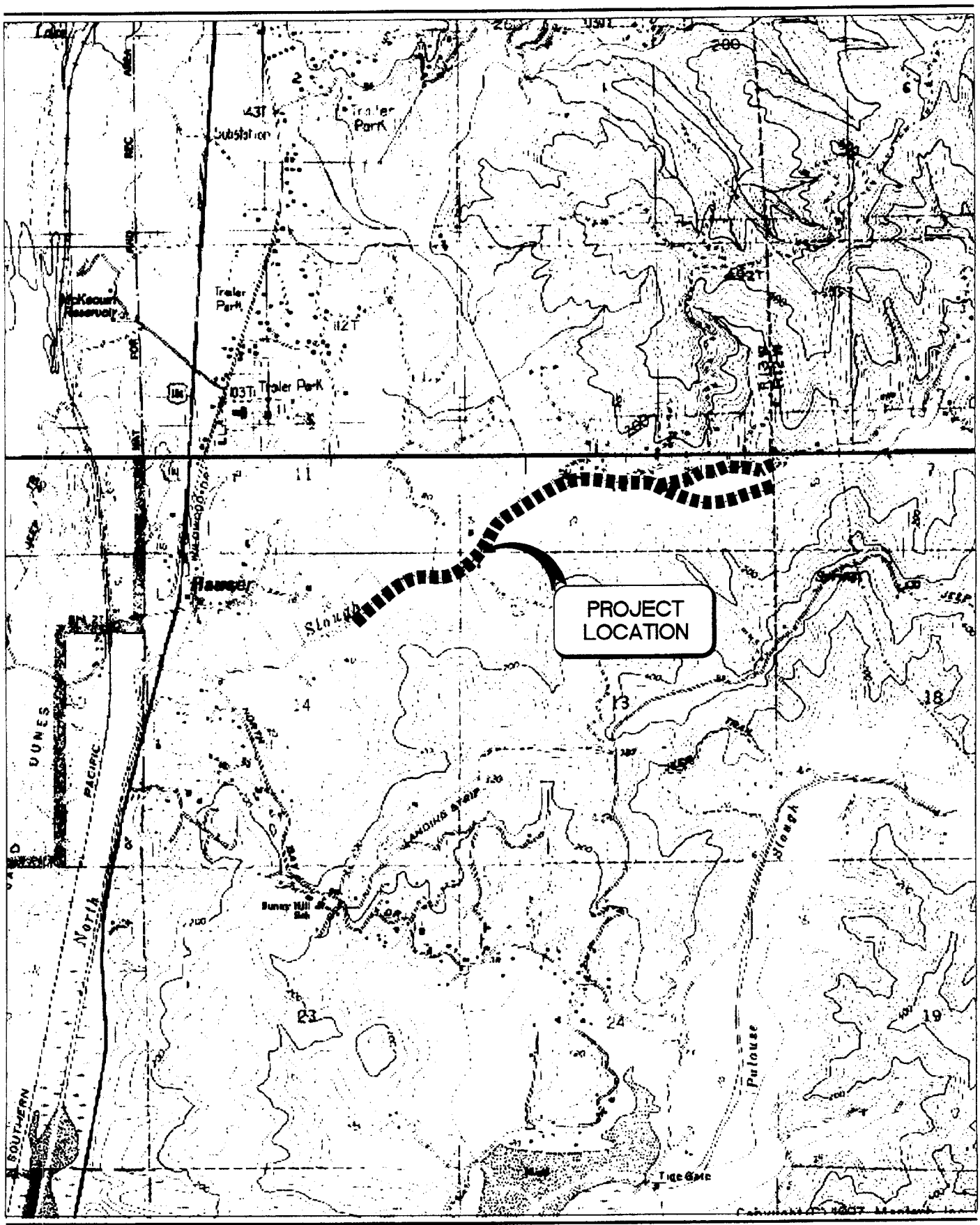

COE #200400469 DATE: MAY, 2004	**HARRY & VICTORIA DAVIS** **NORTH SLOUGH DITCH IMPROVEMENTS** **VICINITY MAP - DITCH IMPROVEMENTS**	FIGURE NO. **1**

Harry & Victoria Davis
Bill Foord
Margaret Gajda

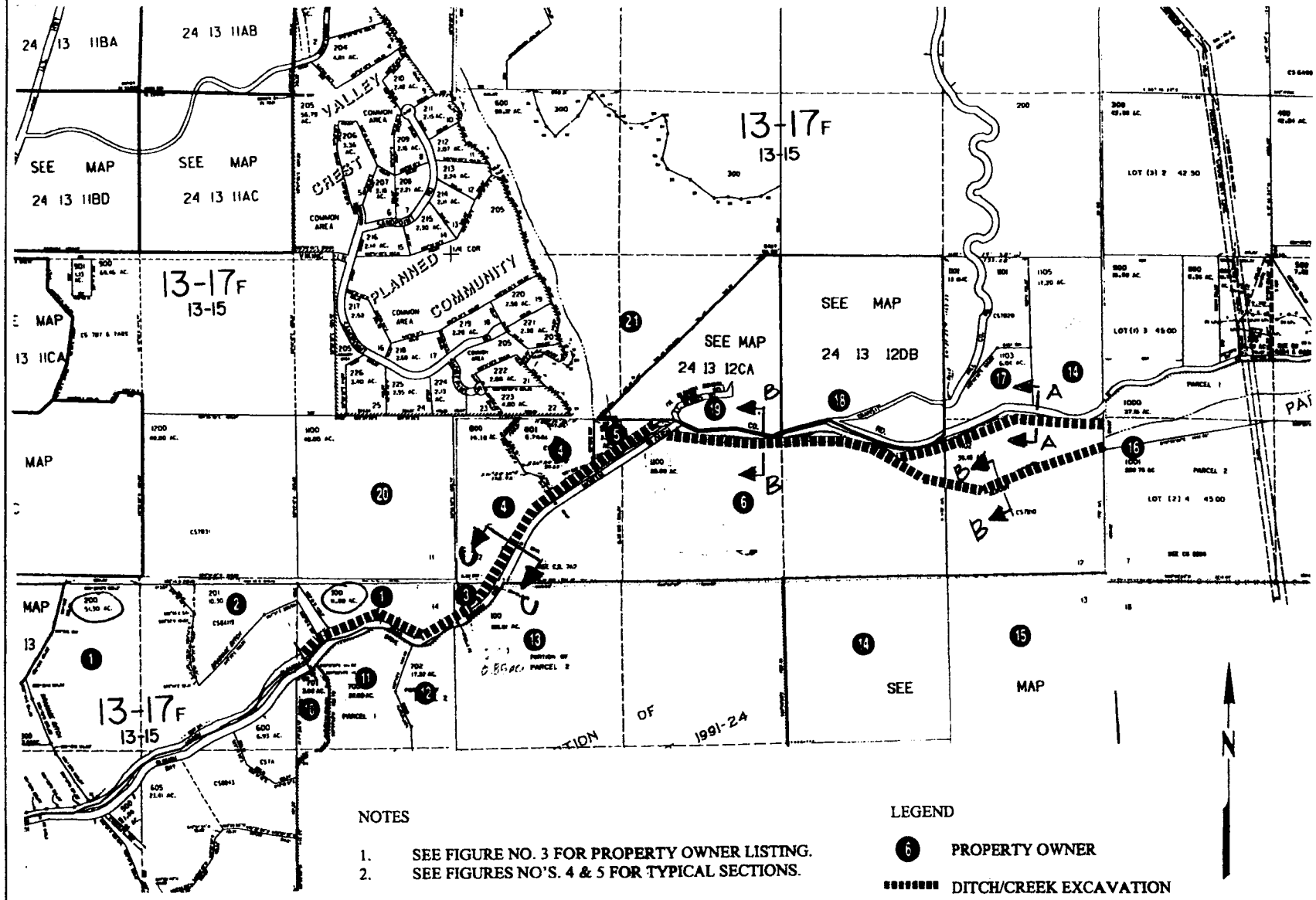

SITE PLAN 1" = 1200'

COE #200400469

DATE: MAY, 2004

HARRY & VICTORIA DAVIS

Page 3 of 5

Harry & Victoria Davis
Ronald Foord
Margaret Gajda

SITE PLAN & PROPERTY OWNERS

FIGURE NO. 2

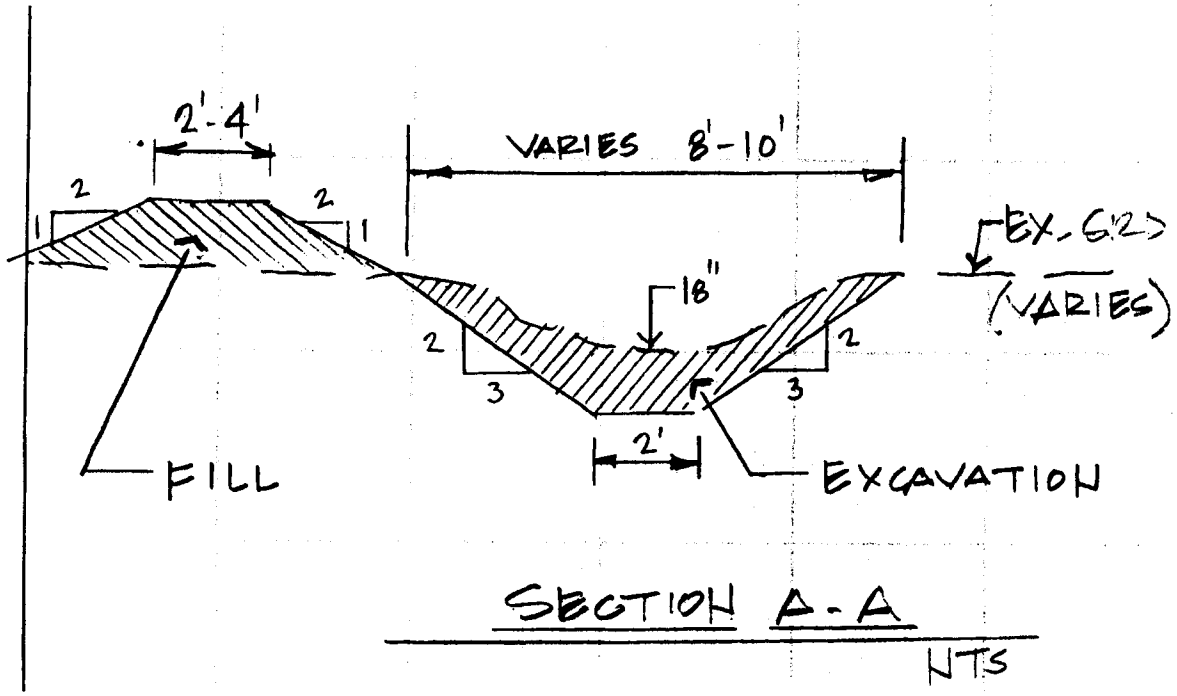

SECTION A-A

NTS

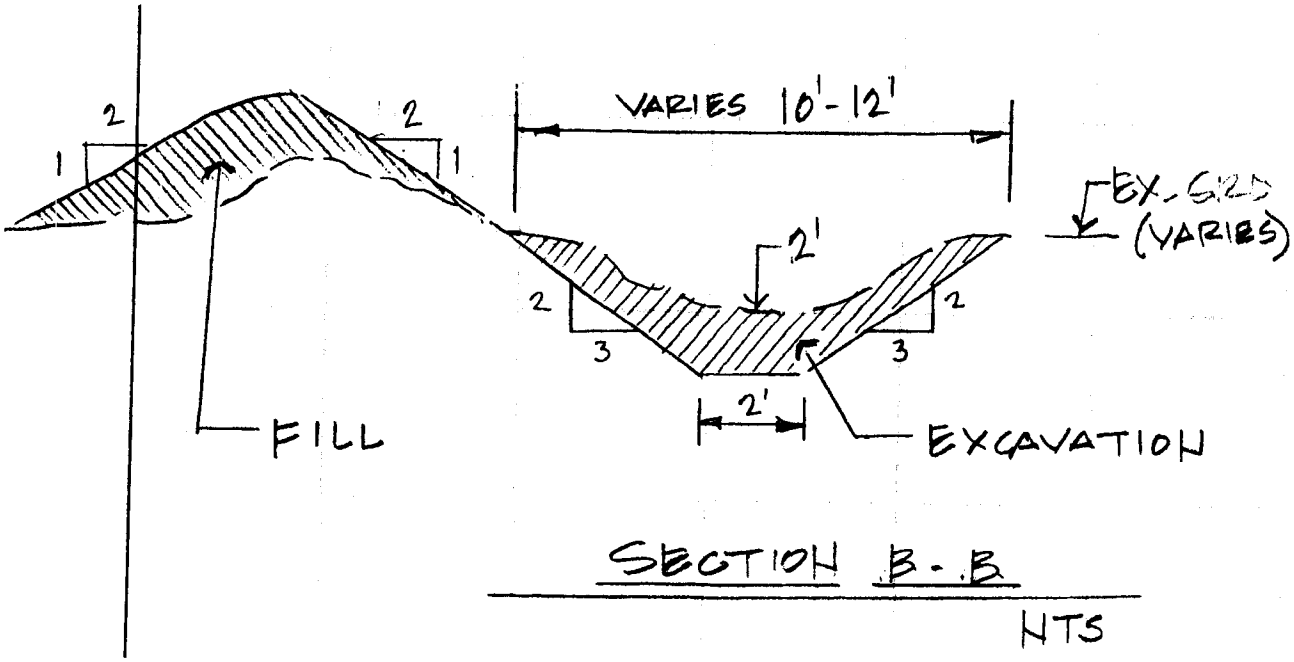

SECTION B-B

NTS

DATE: MAY, 2004	HARRY & VICTORIA DAVIS TYPICAL SECTIONS	FIGURE NO. 4

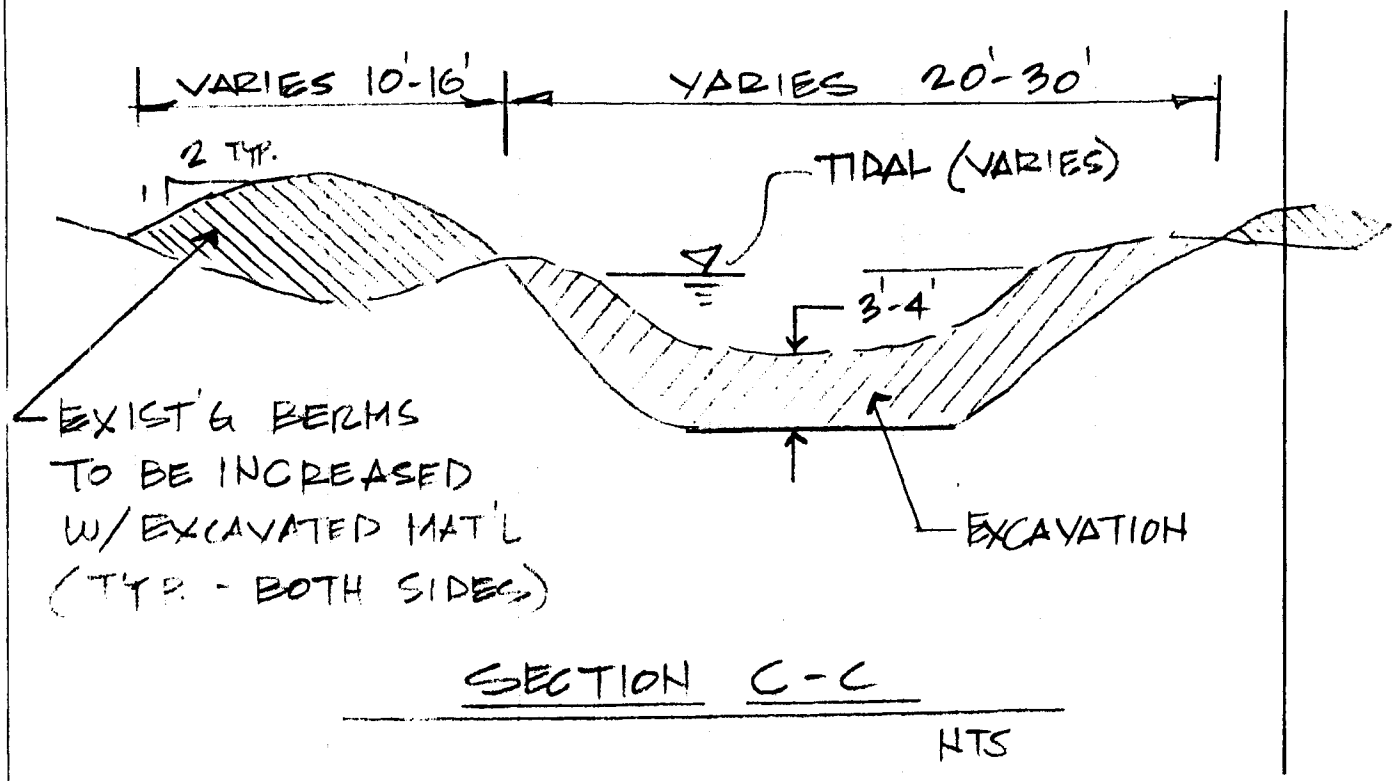

SECTION C-C

NTS

COE #200400469	HARRY & VICTORIA DAVIS	FIGURE NO.
DATE: MAY. 2004	TYPICAL SECTIONS	5

Harry & Victoria Davis
Ronald Foord
Margaret Gajda