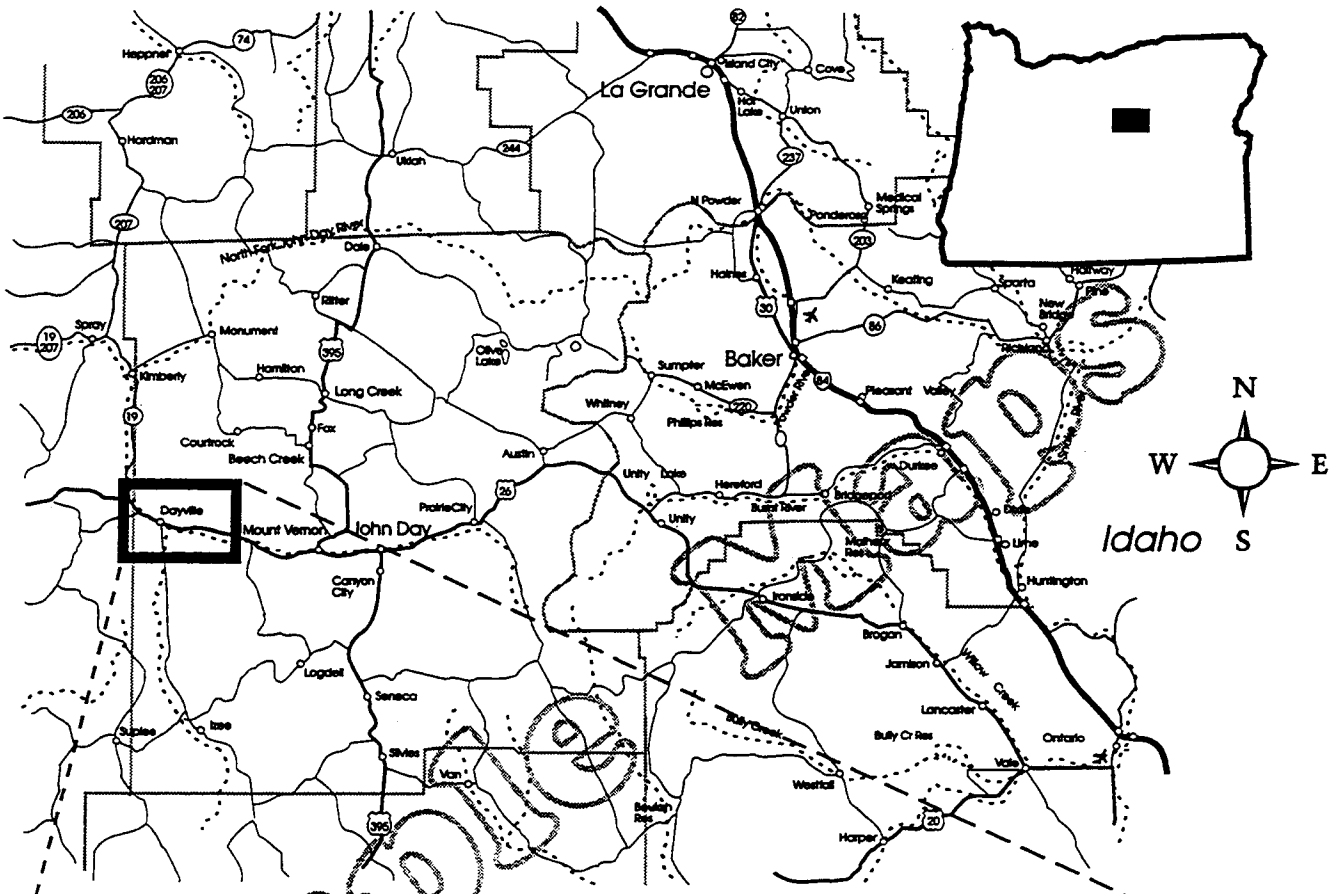

Vicinity Map

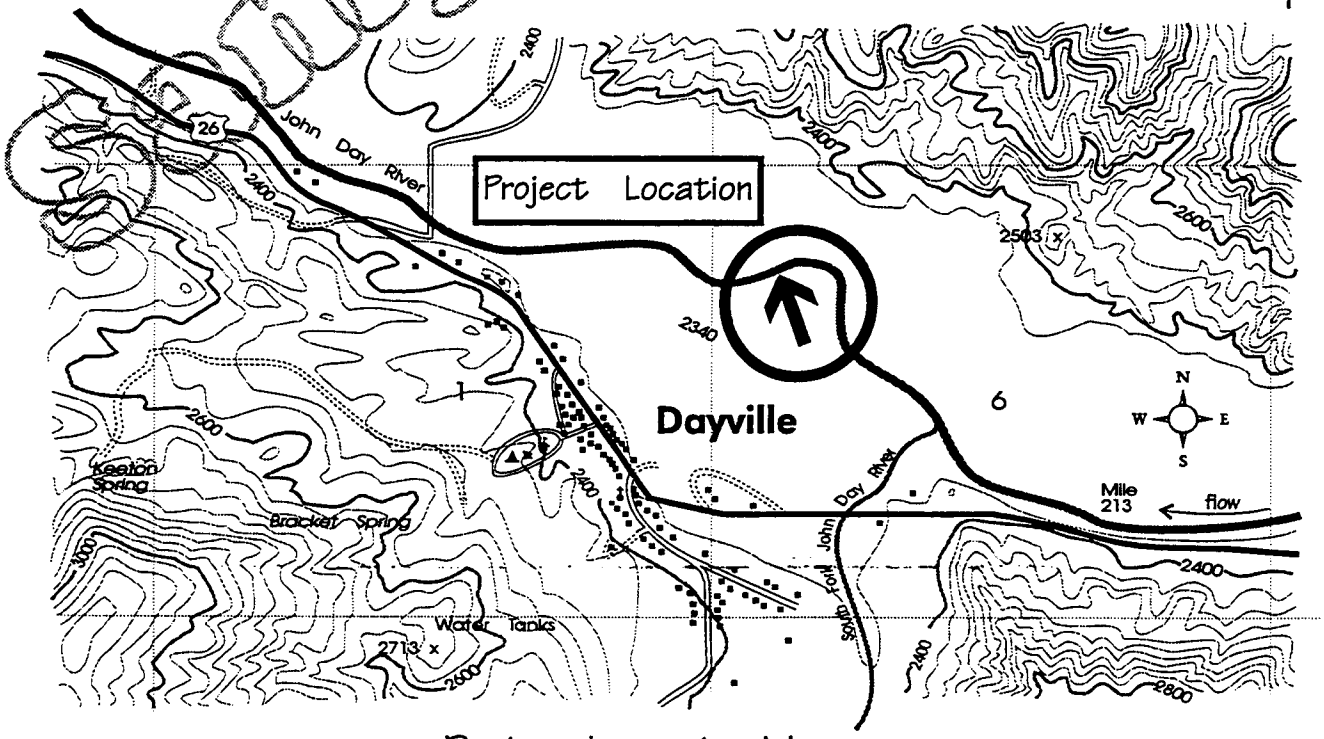

Project Location Map

USGS Quadrangle - Dayville, Oreg

Bank Protection
John Day River at mile 214
January 1994

John & Mary Public
Sheet 1 of 2

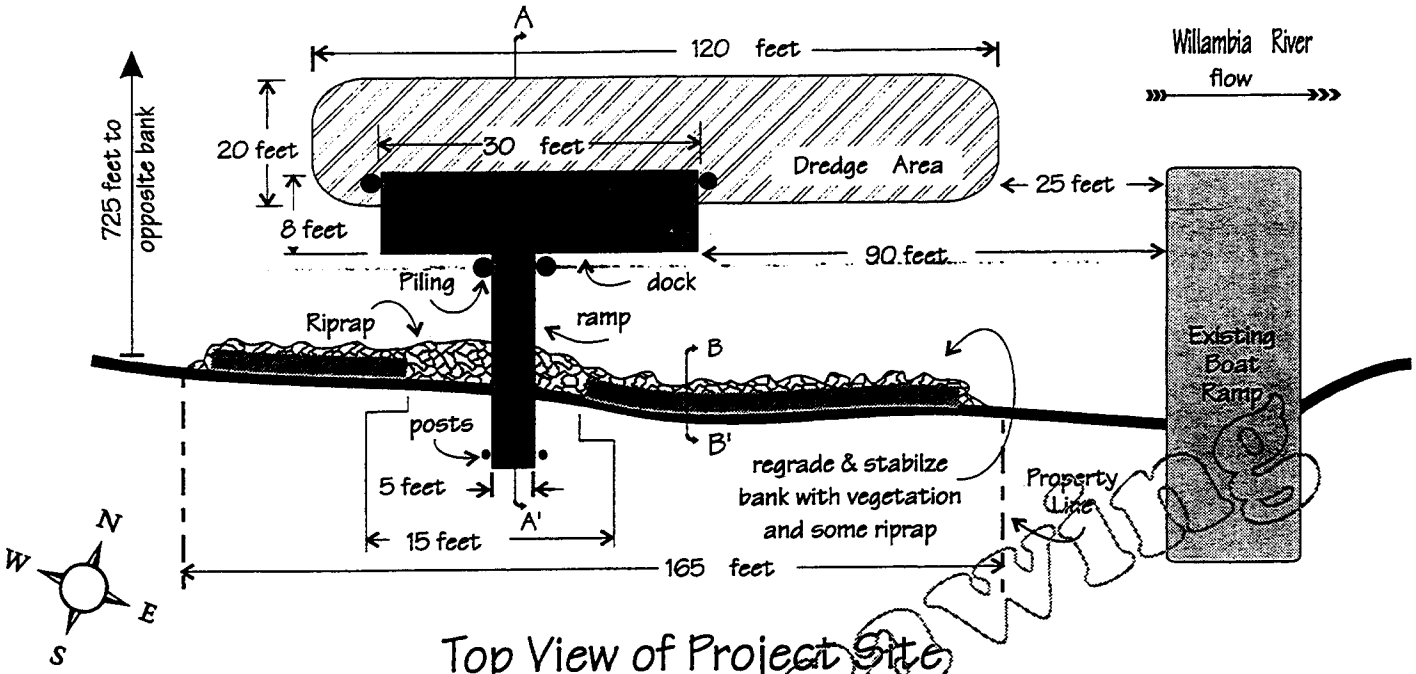

Top View of Project Site

no scale

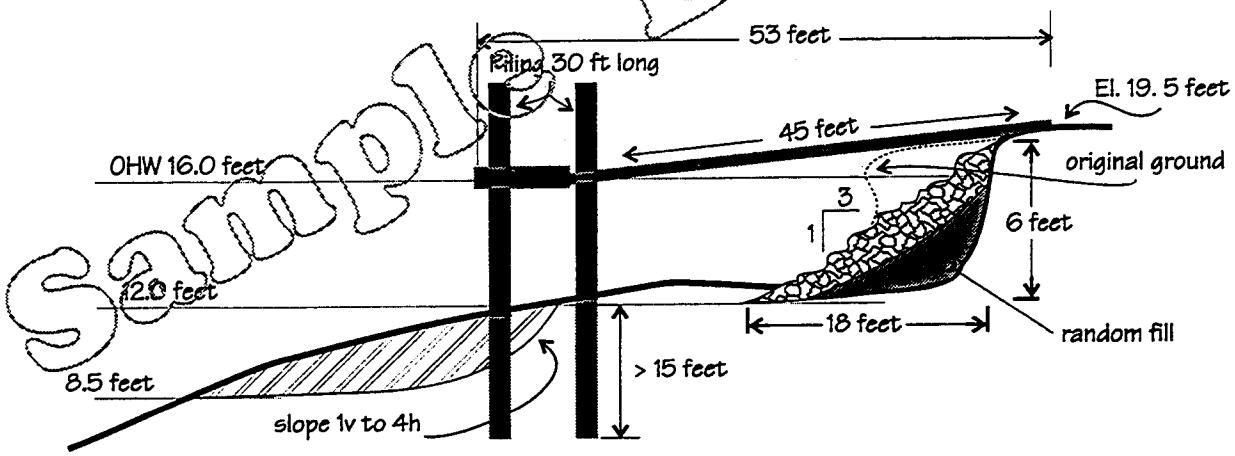

Typical Cross Section View A-A'

no scale

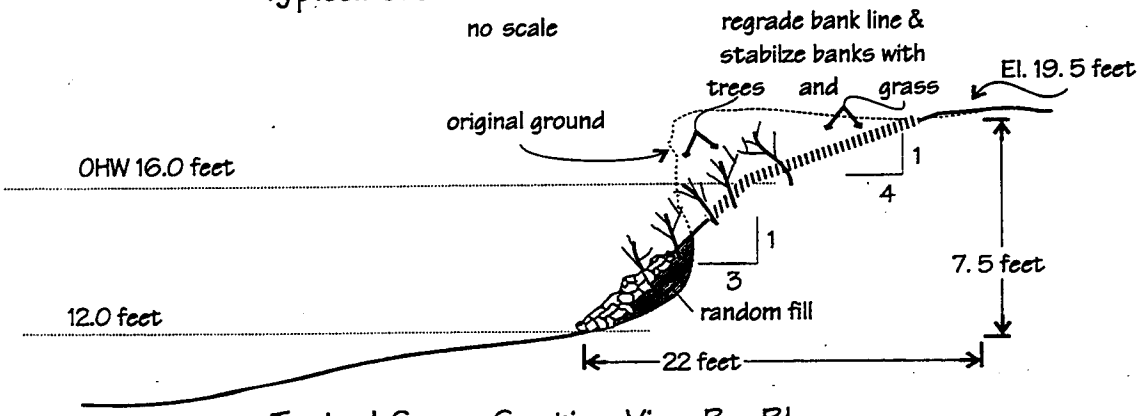

Typical Cross Section View B - B'

no scale

Sample Drawing

Boat Dock & Bank Protection
Willambia River at mile 102.3
January 1994

John Q. Public
Sheet 2 of 2

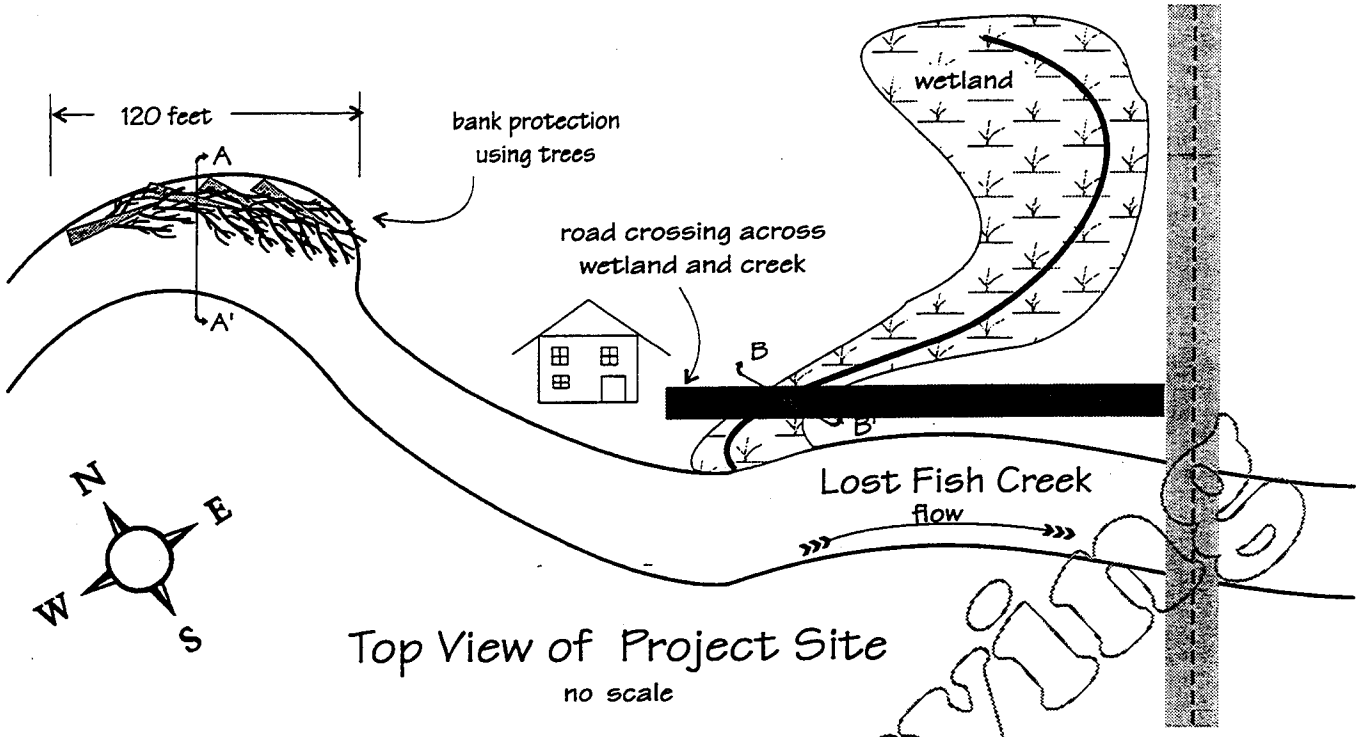

Top View of Project Site
no scale

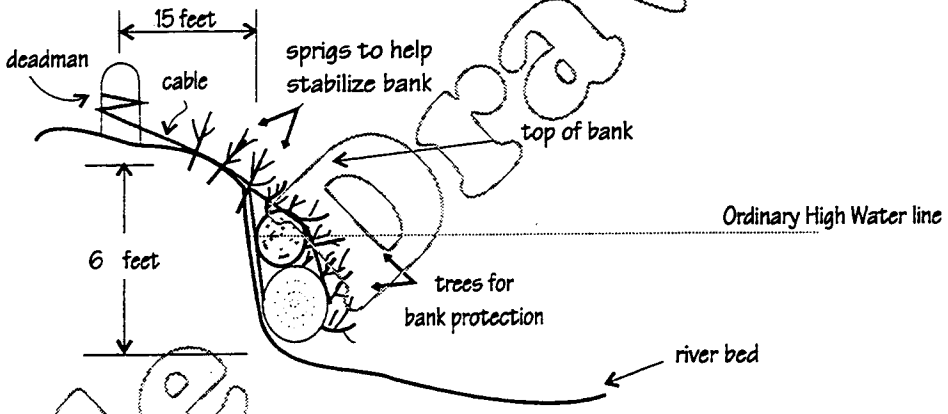

Typical Cross Section View of A - A'
no scale

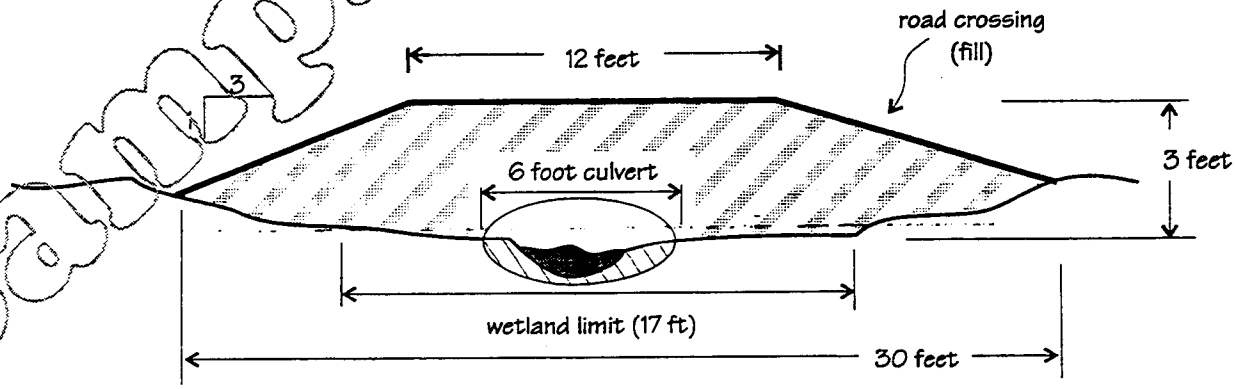

Typical Cross Section View of B - B'
no scale

Sample Drawing

Bank Protection & Road Fill
Lost Fish Creek & Adjacent Wetland
January 1994

Mary Doe Public
Sheet 2 of 2