NWP-2014-257 – Legend Homes Corp.
Corvallis, Benton County, Oregon
Section 14 of Township 12 South, Range 5 West
(44.54162/-123.26037)

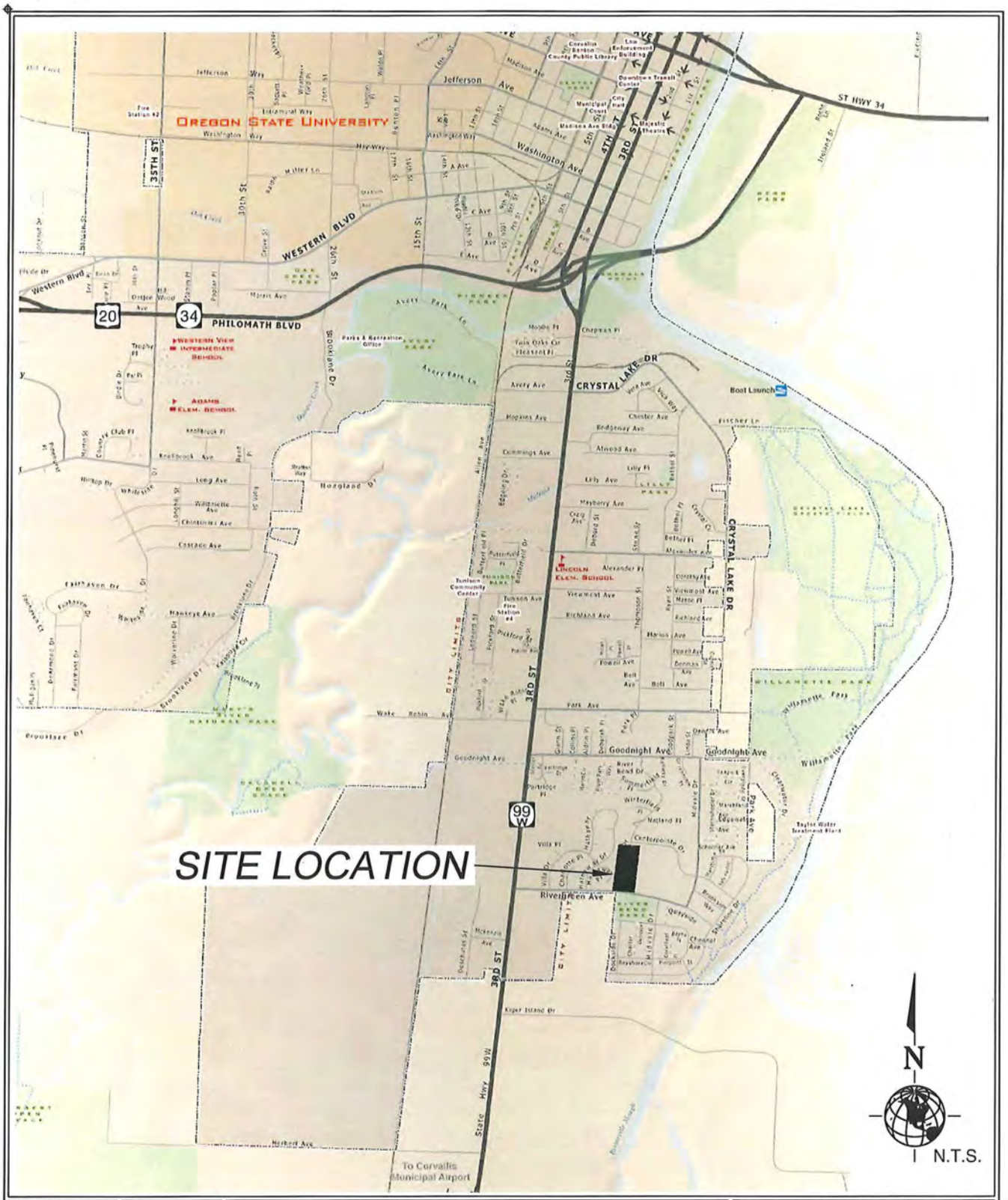

DRAWING:		
1	DRAWN: TAM	SITE LOCATION MAP
	CHECKED: TAM	WILLAMETTE LANDING
	DATE: 4/18/2014	N.E. 1/4, SECTION 14, T 12S, R 5W, TAX LOT 600
	JOB NO.: 1319	BENTON COUNTY, OREGON

MEARS DESIGN GROUP
LANDSCAPE ARCHITECTURE & PLANNING
PO BOX 23338 | PORTLAND, OREGON | 97281
PHONE: 503.601.4516 | FAX: 503.924.4688

DRAWING:	DRAWN: TAM	2012 AERIAL PHOTO	Source: Google Earth Pro Software	MEARS DESIGN GROUP
9	CHECKED: TAM	WILLAMETTE LANDING	SCALE: 1" = 100'-0"	LANDSCAPE ARCHITECTURE & PLANNING
	DATE: 4/18/2014	N.E. 1/4, SECTION 14, T 12S, R 5W, TAX LOT 600	50' 25' 0' 50' 100'	PO BOX 23338 | PORTLAND, OREGON | 97281
	JOB NO.: 1319	BENTON COUNTY, OREGON		PHONE: 503.601.4516 | FAX: 503.924.4688

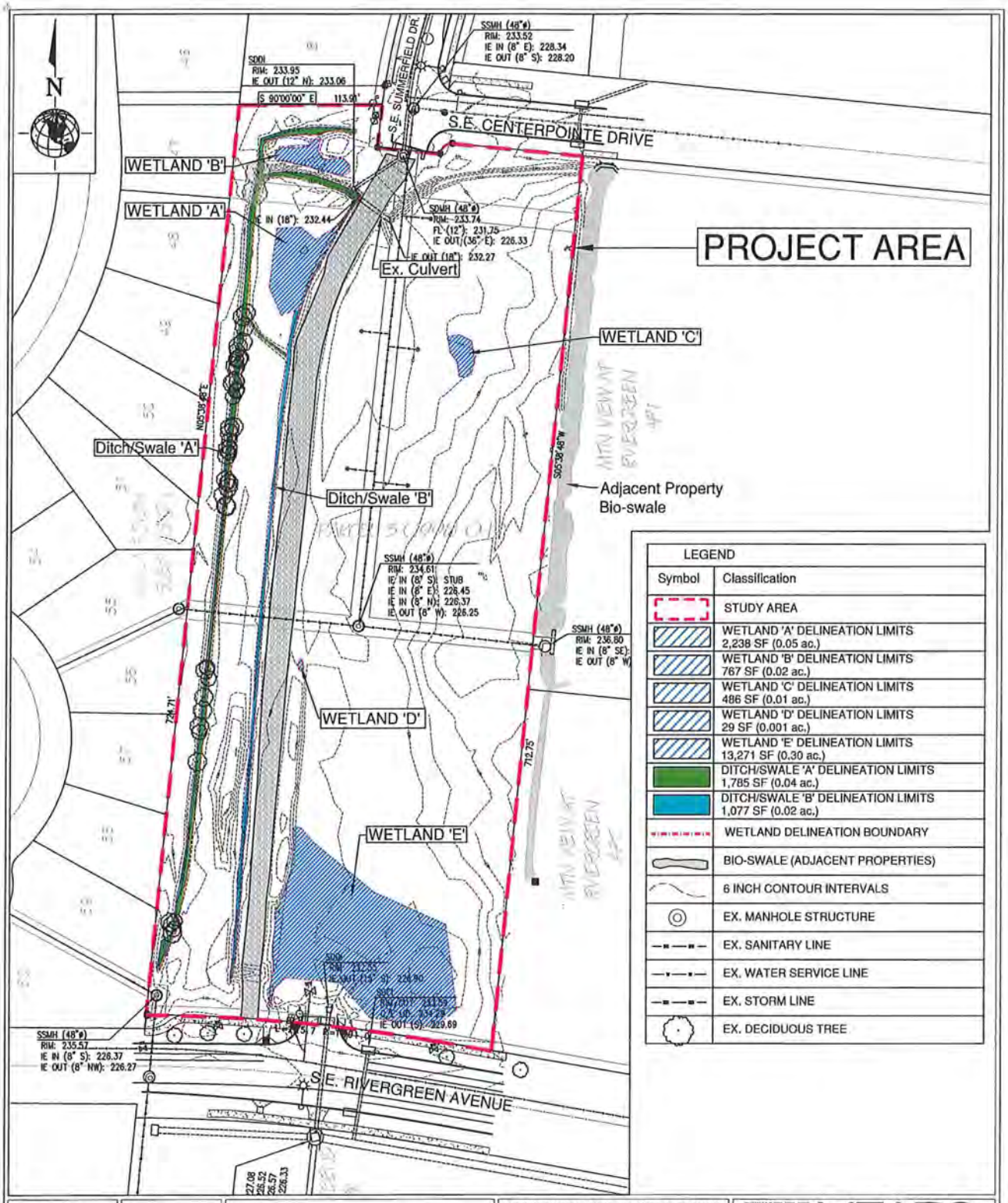
N
S.E. CENTERPOINTE DRIVE
S.E. SUMMERFIELD DR.
S.E. RIVERGREEN AVENUE
PROJECT AREA
WETLAND 'A'
WETLAND 'B'
WETLAND 'C'
WETLAND 'D'
WETLAND 'E'
Ditch/Swale 'A'
Ditch/Swale 'B'
Ex. Culvert
Adjacent Property
Bio-swale
SSMH (48"ø)
RIM: 233.52
IE IN (8" E): 228.34
IE OUT (8" S): 228.20
SDOI
RIM: 233.95
IE OUT (12" N): 233.06
S 90°00'00" E 113.90'
SDMH (48"ø)
RIM: 233.74
FL (12"): 231.75
IE OUT (36" E): 226.33
IE OUT (18"): 232.27
IE IN (18"): 232.44
SSMH (48"ø)
RIM: 234.61
IE IN (8" S): STUB
IE IN (8" E): 228.45
IE IN (8" N): 226.37
IE OUT (8" W): 226.25
SSMH (48"ø)
RIM: 236.80
IE IN (8" SE):
IE OUT (8" W)
SSMH (48"ø)
RIM: 235.57
IE IN (8" S): 226.37
IE OUT (8" NW): 226.27
N05°38'48"E
S05°38'48"W
724.71'
712.75'
LEGEND
Symbol
Classification
STUDY AREA
WETLAND 'A' DELINEATION LIMITS 2,238 SF (0.05 ac.)
WETLAND 'B' DELINEATION LIMITS 767 SF (0.02 ac.)
WETLAND 'C' DELINEATION LIMITS 486 SF (0.01 ac.)
WETLAND 'D' DELINEATION LIMITS 29 SF (0.001 ac.)
WETLAND 'E' DELINEATION LIMITS 13,271 SF (0.30 ac.)
DITCH/SWALE 'A' DELINEATION LIMITS 1,785 SF (0.04 ac.)
DITCH/SWALE 'B' DELINEATION LIMITS 1,077 SF (0.02 ac.)
WETLAND DELINEATION BOUNDARY
BIO-SWALE (ADJACENT PROPERTIES)
6 INCH CONTOUR INTERVALS
EX. MANHOLE STRUCTURE
EX. SANITARY LINE
EX. WATER SERVICE LINE
EX. STORM LINE
EX. DECIDUOUS TREE
DRAWING: 2
DRAWN: TAM
CHECKED: TAM
DATE: 6/16/2014
JOB NO.: 1319
EXISTING CONDITIONS
WILLAMETTE LANDING
N.E. 1/4, SECTION 14, T 12S, R 5W, TAX LOT 600
BENTON COUNTY, OREGON
* EXISTING PROPERTY SURVEY PROVIDED BY SR DESIGN, LLC. SURVEY ACCURACY 0.1 FOOT. SAMPLE PLOT AND JURISDICTIONAL BOUNDARY LOCATIONS ACCURACY +/- 1 FOOT.
SCALE: 1" = 100'-0"
50' 25' 0' 50' 100'
MEARS DESIGN GROUP
LANDSCAPE ARCHITECTURE & PLANNING
PO BOX 23336 | PORTLAND, OREGON | 97281
PHONE: 503.601.4516 | FAX: 503.924.4688

WILLAMETTE LANDING PHASE 9

32-LOT SUBDIVISION

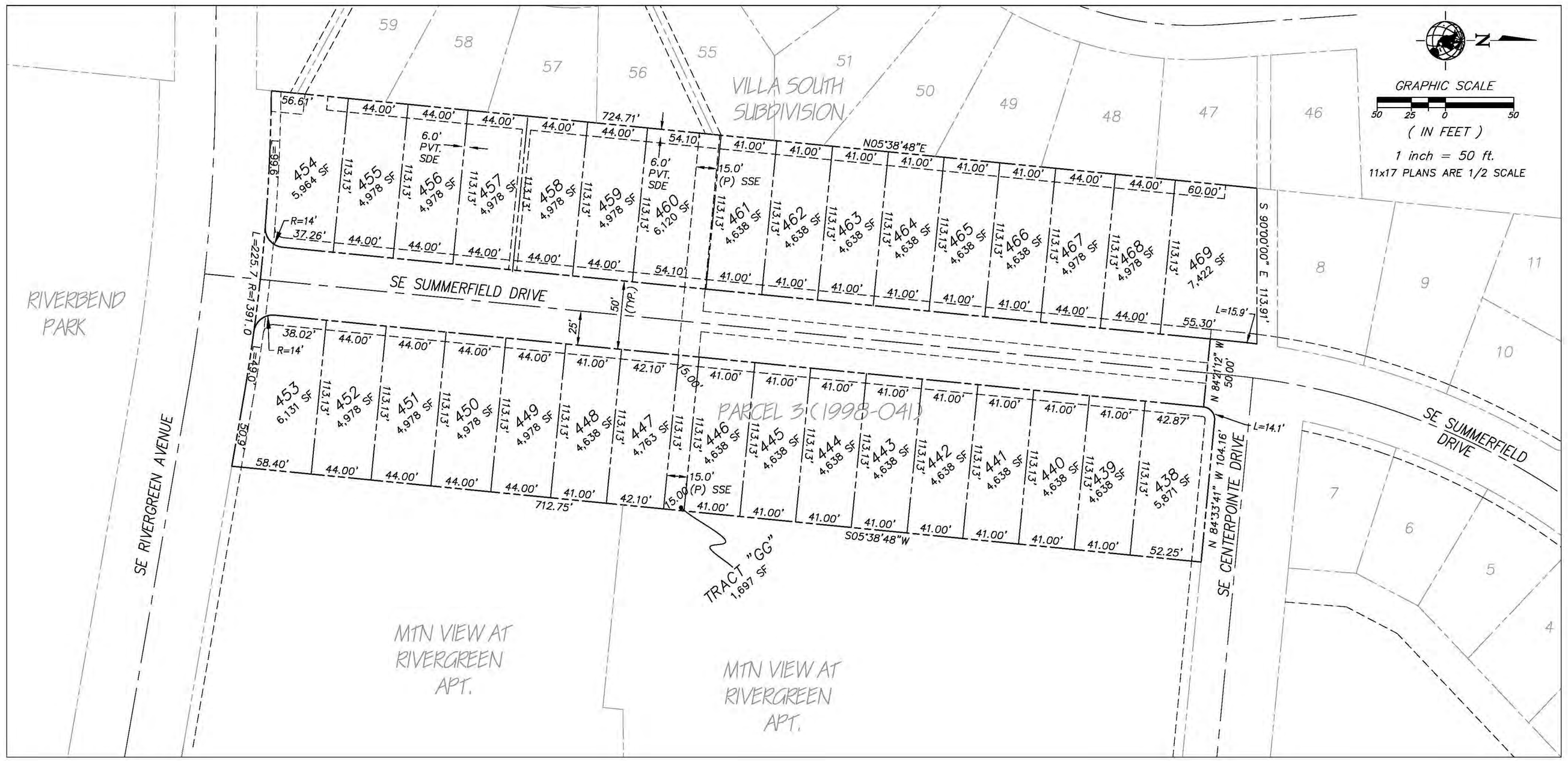

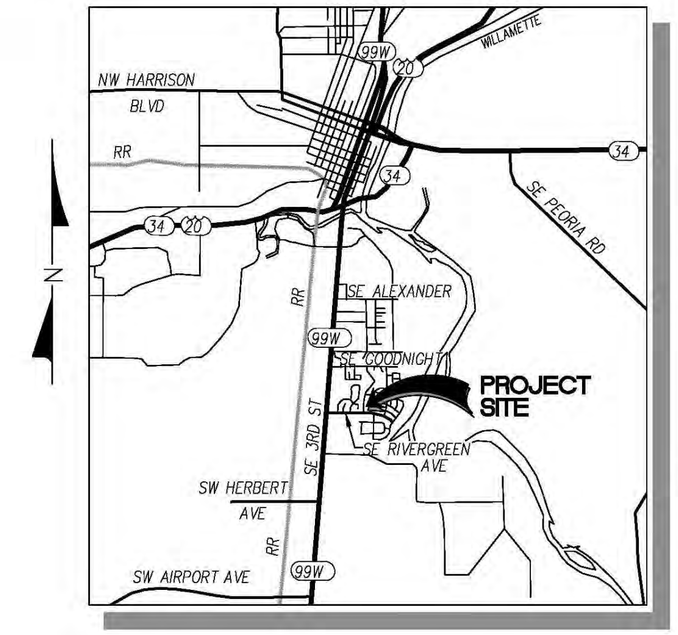

VICINITY MAP

NTS

SHEET INDEX

C1	COVER SHEET / PLAT
C2	CONSTRUCTION NOTES
C3	EXISTING CONDITIONS PLAN
C4	GRADING PLAN
C5	SIGNING PLAN
C6	LIGHTING PLAN
C7	COMPOSITE UTILITY / TREE PLAN
C100	STREET AND STORM PROFILE PLAN
C101	STREET DETAILS
C101	STORM DETAILS
C200	STREET, SANITARY AND WATER PROFILE PLAN
C201	SANITARY DETAILS
C202	WATER DETAILS
ESC-1	EROSION & SEDIMENT CONTROL COVER SHEET
ESC-2	CLEARING & DEMOLITION EROSION & SEDIMENT CONTROL PLAN
ESC-3	GRADING, STREET & UTILITY CONSTRUCTION EROSION & SEDIMENT CONTROL PLAN
ESC-4	EROSION & SEDIMENT CONTROL DETAILS

BENCHMARK

BENTON COUNTY BENCHMARK #327
U.S.G.S. BRASS CAP IN CONCRETE NORTH SIDE OF HERBERT AVE, WEST OF R/W OF HWY. 99W
P-388 RESET NGS

ELEV = 236.65

LEGAL DESCRIPTION

A PORTION OF PARCEL 3, PARTITION PLAT 1998-041 (TAX MAP 12514A, TAX LOT 600)
NE 1/4 SECTION 14, T.12S., R.5W, W.M.
CORVALLIS, BENTON COUNTY, OREGON

SITE INFORMATION

TOTAL SITE AREA: 197,185 SF (4.53 ACRES)
DEDICATED AREA: 34,887 SF (0.80 ACRES)
NET AREA: 162,298 S.F. (3.73 ACRES)
ZONING: PD(RS-9)
MINIMUM LOT WIDTH: 40 FT.
MINIMUM FRONT SETBACKS:
10 FT. – PORCH AND HOUSE FACE
19 FT. – GARAGE FACE
MINIMUM SIDE YARD SETBACKS:
4 FT. – INTERIOR SIDE YARDS
10 FT. – EXTERIOR SIDE YARDS
MINIMUM REAR SETBACKS: 15 FT.

TYPICAL ABBREVIATIONS

(E)	EXISTING
(P)	PROPOSED
PVT.	PRIVATE
PUE	PUBLIC UTILITY EASEMENT
ROW	RIGHT OF WAY
SDE	STORM DRAIN EASEMENT
SSE	SANITARY SEWER EASEMENT
SF	SQUARE FEET
TYP.	TYPICAL
U.N.O.	UNLESS NOTED OTHERWISE

LEGEND

- EXISTING BOUNDARY
- EXISTING PROPERTY LINE
- EXISTING ROW CENTERLINE
- EXISTING EASEMENT
- PROPOSED LOT LINE
- PROPOSED ROW LINE
- PROPOSED CENTERLINE
- PROPOSED EASEMENT

FRANCHISE UTILITY CONTACTS

SOLID WASTE:	ALLIED WASTE SERVICES	(541) 754-0444
ELECTRICAL:	PACIFIC POWER	(888) 221-7070
CABLE TV:	COMCAST	(888) 824-8264
NATURAL GAS:	NW NATURAL	(541) 926-4253
TELEPHONE:	CENTURY LINK	(800) 954-1211

CALL BEFORE YOU DIG
OREGON UTILITY NOTIFICATION CENTER
1-800-332-2344

PROJECT TEAM

DEVELOPER

LEGEND HOMES CORPORATION
12755 SW 69TH AVE., STE. 100
PORTLAND, OR 97223
PHONE – (503) 620-8080
FAX – (503) 598-8900
CONTACT: JIM CHAPMAN
EMAIL: JCHAPMAN@LEGENDHOMES.COM

CIVIL ENGINEER

SR DESIGN LLC
8196 SW HALL BLVD., SUITE 101
BEAVERTON, OR 97008
PHONE – (503) 469-1213
FAX – (503) 469-8553
CONTACT: STEVE ROPER
EMAIL: STEVER@SRDLLC.COM

PLANNER

PLANNEXT
4735 SW 26TH DRIVE
PORTLAND, OR 97239
PHONE – (541) 971-2456
CONTACT: ERIC ADAMS
EMAIL: PLANNEXT@GMAIL.COM

SURVEYOR

NORTHSTAR SURVEYING, INC.
720 NW 4TH STREET
CORVALLIS, OR 97330
PHONE – (541) 757-9050
FAX – (541) 757-7578
CONTACT: TED LANGTON
EMAIL: TLANGTON@NORTHSTARSURVEYING.COM

IMERVIOUS AREA CALCULATIONS:

AREA DISTURBED DURING CONSTRUCTION:	= 47,524 sf or 1.09 acres
EXISTING IMPERVIOUS AREA:	= 0 sf or 0.00 acres
EXISTING PERVIOUS AREA:	= 197,185 sf or 4.53 acres
NEW IMPERVIOUS AREA WITHIN ROADS/SIDEWALK (ONSITE):	= 21,371 sf or 0.49 acres

PIP14-1581

SR DESIGN LLC
Engineering
Planning
8196 SW Hall Boulevard, Suite 101
Beaverton, Oregon 97008
phone (503) 469-1213
fax (503) 469-8553
www.srdllc.com

REGISTERED PROFESSIONAL ENGINEER
OREGON
STEVEN C. ROPER
SEPT. 14, 1989
EXPIRES 12-31-14

COVER SHEET / PLAT
WILLAMETTE LANDING PHASE 9
695 SE RIVERGREEN AVENUE
CORVALLIS, OREGON
LEGEND HOMES CORP., PORTLAND, OR 97223

REV.	DESCRIPTION	DATE
1	PER CITY COMMENT	6/30/14

PROJECT NO. LEG001
CASE FILE NO. PLD13-00009 SUB13-00002

DATE	5/15/14
DESIGNED	S ROPER
ENGINEER	S ROPER
CHECKED	
SHEET TITLE	COVER / PLAT
SHEET NUMBER	C1

Enclosure

STREET CONSTRUCTION NOTES

1. ALL WORK IN THE PUBLIC RIGHT-OF-WAY SHALL CONFORM TO CURRENT CITY OF CORVALLIS STANDARD DRAWINGS AND SPECIFICATIONS.
2. EROSION CONTROL MUST BE INSTALLED AND MAINTAINED PER THE APPROVED EROSION CONTROL PLANS.
3. STATIONING IS FROM ROAD CENTERLINE U.N.O.
4. CONSTRUCT ROADS PER DESIGNATED SECTION ON THIS SHEET.
5. SIDEWALK SUBGRADE SHALL BE CONSTRUCTED WITH STREET EXCAVATION OR EMBANKMENT UNLESS OTHERWISE SPECIFIED OR APPROVED BY CITY ENGINEER.
6. EXACT LOCATION OF A.D.A. RAMPS WILL BE AGREED UPON IN THE FIELD BETWEEN THE CITY INSPECTOR AND ENGINEER.
7. 3" WEEPHOLES SHALL BE INSTALLED AT THE TIME OF CURB CONSTRUCTION. SEE SPECIFICATIONS.
8. OVER-EXCAVATION SHALL CONFORM TO THE CITY OF CORVALLIS STANDARD CONSTRUCTION SPECIFICATIONS.
9. ALL SIGNS SHALL BE DIAMOND GRADE 3M, AND SUPPLIED WITH A 2" GALVANIZED SCHEDULE 40 POST.
10. ALL SIGNS SHALL BE INSTALLED BY THE CITY OF CORVALLIS PUBLIC WORKS DEPARTMENT AT THE DEVELOPER'S EXPENSE.
11. YELLOW CURB SHALL COMPLY WITH THE CITY OF CORVALLIS "YELLOW CURBING POLICY." ALL MARKING MATERIALS SHALL COMPLY WITH THE CITY OF CORVALLIS "DURABLE GOODS APPLICATION PROCESS" POLICY.
12. A MIMIMUM OF ONE FIELD DENSITY TEST SHALL BE CONDUCTED ON COMPACTED MATERIAL EVERY 50 LINEAL FEET. MOISTURE DENSITY CURVES SHALL BE CONDUCTED AS PER PROCEDURES SET FORTH IN ASTM D 698 OR AASHTO T-99. MINIMUM DENSITY IN THE FIELD SHALL BE 95% OF THE MAXIMUM DRY DENSITY.
13. IF THE REQUIRED COMPACTED DEPTH OF THE BASE MATERIALS EXCEEDS 6 INCHES, IT SHALL BE CONSTRUCTED IN TWO OR MORE LAYERS OF APPROXIMATELY EQUAL THICKNESS. ALL BASE COURSE MATERIAL MUST BE SUPPLIED WITH TEST RESULTS AS SPECFICIED IN THE CITY OF CORVALLIS STANDARD CONSTRUCTION SPECIFICAITONS.
14. FOR DENSE GRADED HOT MIX ASPHALT CONCRETE, THE MIXTURE SHALL BE COMPACTED TO AT LEAST 92% OF THE THEORETICAL MAXIMUM DENSITY (RICE DENSITY) AS DETERMINED BY ODOT TM 306 THE JOB MIX FORMULA IS THE STAMPED AND APPROVED MIX DESIGN FOR THE PROJECT, AS PER ODOT STANDARD SPECIFICATION SECTION 00745, HOT MIX ASPHALT CONCRETE AND AS APPROVED BY THE CITY ENGINEER.
15. COMPRESSIVE STRENGTH SPECIMENS, AIR ENTRAINMENT, AND SLUMP TESTS SHALL BE TAKEN FOR EVERY 50 CUBIC YARDS OF CONCERETE WITH A MINIMUM OF ONE SERIES OF TESTS PER DAY. A MINIMUM OF FOUR SPECIMENS SHALL BE MOLDED WITH ONE OF THOSE BEING TESTED AT 7 DAYS AND TWO AT 28 DAYS AND THE REMAINING AS A HOLD. THE COMPRESSIVE STRENGTH SHALL BE THE AVERAGE OF TWO OR MORE 28 DAY SPECIMENS FROM THE SAME TRUCK WITH NO MORE THAN 500 PSI OF DIFFERENCE IN THE STRENGTHS.

STORM CONSTRUCTION NOTES

1. ALL WORK IN THE PUBLIC RIGHT-OF-WAY SHALL CONFROM TO CURRENT CITY OF CORVALLIS STANDARD DRAWINGS AND SPECIFICATIONS.
2. EROSION CONTROL MUST BE INSTALLED AND MAINTAINED PER THE APPROVED EROSION CONTROL PLANS.
3. STATIONING IS FROM ROAD CENTERLINE U.N.O.
4. BIO BAGS SHOULD BE INSTALLED IMMEDIATELY AFTER STORM INLETS AND CATCH BASINS ARE INSTALLED.
5. CONSTRUCT DESIGNATED SIZE STORM DRAIN PER CITY OF CORVALLIS DETAIL #201. USE CLASS B BACKFILL, OR AS DESIGNATED ON PROFILE.
6. MANHOLE AND CLEANOUT RIM ELEVATIONS SHOWN ARE APPROXIMATE AND FOR INFORMATION ONLY. FINAL EVELATIONS SHALL BE SET TO MATCH CONSTRUCTED FINISH GRADE.
7. STORM LATERALS ARE PROVIDED FOR LOW POINT FOUNDATION DRAINS. ROOF DRAINS SHALL BE CONNECTED TO CURB WEEPHOLES ON THE LOW SIDE OF THE LOT, WHENEVER POSSIBLE (SEE CITY OF CORVALLIS DETAIL #103).
8. CURB INLETS REFERENCE STREET CENTERLINE STATION AT TOP CENTER FACE OF CURB.
9. ALL PVC STORM LINES SHALL BE SPECIFIED DIA, ASTM D3034 SDR 35. ALL CONCRETE STORM LINES SHALL BE SPECIFIED DIA. ASTM C76 CLASS III REINFORCED CONCRETE PIPE. STORM LINES SHALL CONFORM TO THE CITY OF CORVALLIS STANDARD CONSTRUCTION SPECIFICATIONS.
10. STORM DRAIN AND SANITARY SEWER ACCEPTANCE AND TESTING SHALL BE PURSUANT TO THE CITY OF CORVALLIS STANDARD CONSTRUCTION SPECIFCATION TECHNICAL REQUIREMENTS III.2.E.00, III.3.E.00, AND III.4.E.00. VIDEO INSPECTION SHALL BE BY THE CITY AT THE CITY'S EXPENSE ONE TIME ONLY. SUBSEQUENT VIDEO INSPECTIONS MAY BE BILLED TO THE CONTRACTOR. THE ENGINEER OF RECORD SHALL NOTIFY THE CITY, IN WRITING, A MINIMUM OF FIVE (5) WORKING DAYS PRIOR TO THE DESIRED VIDEO INSPECTION DATE. THE CONTRACTOR SHALL ALLOW THE CITY FIVE (5) WORKING DAYS FROM THE DESIRED INSPECTION DATE TO COMPLETE THE VIDEO INSPECTION.
11. STORM DRAIN LATERALS SHALL BE CONSTUCTED PER CITY OF CORVALLIS DETAILS 206 AND 206A. STORM DRAIN LATERALS SHALL BE LOCATED 5' FROM THE PROPERTY LINE AND EXTENDED 1' PAST THE PUBLIC UTILITY EASEMENT (PUE) OR 5' OUTSIDE THE R.O.W IF NO P.U.E. EXISITS. CLEANOUTS ARE REQUIRED AS SHOWN ON PLANS PER DETAIL 206. DEVELOPER IS RESPONSIBLE FOR PROVIDING CLEANOUT RING AND COLLAR AND SETTING TO FINISH GRADE AT THE TIME OF SIDEWALK CONSTUCTION.
12. ALL CURB INLETS SHALL BE INSTALLED WITH A 'STREAM SAVER' CATCH BASIN OUTLET ELBOW (OR EQUAL) FOR WATER QUALITY.
13. ALL MANHOLES CONSTUCTED OUTSIDE OF PUBLIC ROW SHALL HAVE FIBERGLASS MANHOLE MARKERS.

STORM CONSTRUCTION NOTES (CONT.)

14. ALL LATERALS UNDER FUTURE DRIVEWAYS SHALL BE ASTM D3034 SDR 35 U.N.O. ON PLANS.
15. A TELEVISION INSPECTION OF THE MAINLINE WILL BE REQUIRED FOLLOWING THE INSTALLATION OF A SERVICE LATERAL TO AN EXISTING MAINLINE.
16. FOR TRENCH COMPACTION A MINIMUM OF ONE FIELD DENSITY TEST SHALL BE CONDUCTED ON COMPACTED MATERIAL FOR EVERY 50 LINEAL FEET, OR FRACTION THEREOF, OF TRENCH AND FOR EVERY 3 FEET, OR FRACTION THEREOF, OF FILL PLACED. UNLESS OTHERWISE SPECIFIED, MECHANICAL COMPACTION OF ALL PIPE ZONE MATERIAL AND TRENCH BACKFILL MATERIAL IS REQUIRED. THE MATERIALS SHALL BE COMPACTED ACCORDING TO THE PIPE MANUFACTURER'S RECOMMENDATIONS AND IN LIFTS OF APPROPRIATE THICKNESS FOR THE TYPE OF EQUIPMENT BEING USED, TO A DENSITY OF 95% OF THE MAXIMUM RELATIVE DENSITY AS DETERMINED BY AASHTO T99.
17. DEFLECTION TESTS SHALL BE PERFORMED BY THE CONTRACTOR AND WITNESSED BY THE ENGINEER OF RECORD.

SANITARY CONSTRUCTION NOTES

1. ALL WORK IN THE PUBLIC RIGHT-OF-WAY SHALL CONFROM TO CURRENT CITY OF CORVALLIS STANDARD DRAWINGS AND SPECIFICATIONS.
2. EROSION CONTROL MUST BE INSTALLED AND MAINTAINED PER THE APPROVED EROSION CONTROL PLANS.
3. STATIONING IS FROM ROAD CENTERLINE U.N.O.
4. SANITARY SEWER LATERALS SHALL BE CONSTRUCTED PER CITY OF CORVALLIS DETAILS 206 AND 206A. LATERALS EXTEND 1' OUTSIDE THE P.U.E. OR 5' OUTSIDE THE R.O.W. IF NO PUE EXISTS. CLEANOUTS ARE REQUIRED AS SHOWN ON PLAN PER DETAIL 206. DEVELOPER IS RESPONSIBLE FOR PROVIDING CLEANOUT RING AND COLLAR, AND SETTING TO FINISH GRADE AT TIME OF SIDEWALK CONSTRUCTION.
5. TRACER WIRE SHALL BE INSTALLED PER UNIFORM PLUMBING CODE FOR ALL SANITARY SEWER LINES IN PRIVATE PROPERTY.
6. MANHOLE RIM ELEVATIONS SHOWN ARE APPROXIMATE AND FOR INFORMATION ONLY. FINAL ELEVATIONS SHALL BE SET TO MATCH CONSTRUCTED FINISH GRADE.
7. ALL SANITARY SEWER LINES SHALL BE SPECIFIED IN DIA. ASTM D3034 SDR 35 PVC PER CITY OF CORVALLIS STANDARD CONSTRCTION SPECIFICATIONS, U.N.O.
8. STORM DRAIN AND SANITARY SEWER ACCEPTANCE AND TESTING SHALL BE PURSUANT TO THE CITY OF CORVALLIS STANDARD CONSTRUCTION SPECIFICATION TECHNICAL REQUIREMENTS. III.2.E.00, III.3.E.00, AND III.4.E.00. VIDEO INSPECTION SHALL BE BY THE CITY OF CORVALLIS AT THE CITY'S EXPENSE ONE TIME ONLY. THE ENGINEER OF RECORD SHALL NOTIFY THE CITY, IN WRITING, A MINIMUM OF FIVE (5) WORKING DAYS PRIOR TO THE DESIRED VIDEO INSPECTION DATE. THE CONTRACTOR SHALL ALLOW THE CITY FIVE (5) WORKING DAYS FROM THE DESIRED INSPECTION DATE TO COMPLETE THE VIDEO INSPECTION.
9. SANITARY SEWER AND WATER SERVICE INSTALLATION SHALL CONFORM TO THE STANDARD SEPARATION REQUIREMENTS AS DEFINED IN O.A.R. 52 APPENDIX A, SECTION 2.1.4. ALL SANITARY SEWER SERVICE CONNECTIONS AT THE MAIN MUST BE MANUFACTURED "WYE," "TEE" OR COMMERCIAL SADDLE FITTINGS.
10. SANITARY MANHOLES CONSTRUCTED OVER EXISTING SANITARY SEWER LINES SHALL PASS ALL
11. REQUIRED TESTING PROIR TO CUTTING THE EXITING SEWER. AFTER CUTTING OF THE EXISTING SEWER MANILINE, ALL NEW SEWER LINES FROM THE SUBDIVISION SHALL BE PLUGGED UNTIL FINAL ACCEPTANCE OF THE PUBLIC IMPROVEMENTS.
12. ALL SANITARY SEWER LATERALS SHALL BE 4" DIA. PVC AT 2% MIN. TO 20% MAX.
13. FOR TRENCH COMPACTION A MINIMUM OF ONE FIELD DENSITY TEST SHALL BE CONDUCTED ON COMPACTED MATERIAL FOR EVERY 50 LINEAL FEET, OR FRACTION THEREOF, OF TRENCH AND FOR EVERY 3 FEET, OR FRACTION THEREOF, OF FILL PLACED. UNLESS OTHERWISE SPECIFIED, MECHANICAL COMPACTION OF ALL PIPE ZONE MATERIAL AND TRENCH BACKFILL MATERIAL IS REQUIRED. THE MATERIALS SHALL BE COMPACTED ACCORDING TO THE PIPE MANUFACTURER'S RECOMMENDATIONS AND IN LIFTS OF APPROPRIATE THICKNESS FOR THE TYPE OF EQUIPMENT BEING USED, TO A DENSITY OF 95% OF THE MAXIMUM RELATIVE DENSITY AS DETERMINED BY AASHTO T99.
14. DEFLECTION TESTS SHALL BE PERFORMED BY THE CONTRACTOR AND WITNESSED BY THE ENGINEER OF RECORD.

WATER CONSTRUCTION NOTES

1. ALL WORK IN THE PUBLIC RIGHT-OF-WAY SHALL CONFORM TO CURRENT CITY OF CORVALLIS STANDARD DRAWINGS AND SPECIFICATIONS.
2. EROSION CONTROL MUST BE INSTALLED AND MAINTAINED PER THE APPROVED EROSION CONTROL PLANS.
3. STATIONING IS FROM ROAD CENTERLINE U.N.O.
4. CONSTRUCT 1" CORP. STOP AND WATER METER SETTING WHERE DESIGNATED ON PLANS PER CITY OF CORVALLIS DETAIL 306, CORP. STOPS SHALL HAVE AT LEAST 2 FEET OF SEPARATION AT TAP POINT ON WATER MAIN, ALL WATER SERVICES SHALL HAVE BE 1" TYPE "k" SOFT COPPER, 1" ANGLE METER STOPS, U.N.O. IRRIGATION SERIVICE AND METER SIZE TO BE AS NOTED ON PLANS. CITY OF CORVALLIS WILL INSTALL 3/4" ADAPTERS AS NECESSARY.

WATER CONSTRUCTION NOTES (CONT.)

5. ALL VALVED SECTIONS OF PUBLIC WATER LINE MUST HAVE A CHLORINATION CORP. OR SERVICE WITHIN THE SECTION TO ALLOW EACH VALVED SECTION TO BE TESTED SEPARATELY FOR PRESSURE AND LEAKAGE. CHLORINATION CORPS/SERVICES SHALL BE LOCATED BETWEEN 18 INCHES AND 10 FEET DOWNSTREAM OF EACH VALVE. WATERLINE ACCEPTANCE TESTING SHALL BE PERSUANT TO CITY OF CORVALLIS STANDARD CONSTRUCTION SPECIFICATION TECHNICAL REQUIREMENT I.V.E.00.
6. CURBS SHALL BE CONSTRUCTED AND ANGLE STOP ALIGNMENT (HORIZONTAL AND VERTICAL) SHALL BE APPROVED PRIOR TO ANY WATERLINE TESTS.
7. ALL WATERLINES SHALL BE CONSTRUCTED BETWEEN A MINIMUM DEPTH OF 36" AND A MAXIMUM DEPTH OF 42" FROM FINISH GRADE TO THE TOP OF THE WATERLINE.
8. THRUST BLOCKING SHALL BE INSTALLED PER CITY OF CORVALLIS STANDARD DETAIL NO. 301.
9. METER BOXES SHALL BE INSTALLED IN PAIRS LESS THAN 4 FEET APART AND SHALL HAVE A 3/4 -INCH CONDUIT 18 INCHES DEEP BETWEEN THE BOXES TO ACCOMMODATE MULTIPLE METERS ON A SINGLE RADIO TRANSMITTER READER. THE CONDUIT SHALL BE PLACED WITHIN 3" OF THE METER'S INNER CORNER AND EACH END SHALL BE SEALED USING A REMOVABLE PLUG. ANY BENDS IN THE CONDUIT SHALL BE MADE USING A 6" SWEEP AND CONDUIT JOINTS SHALL BE GLUED WITH A MANUFACTURER-APPROVED COMPOUND. SEE DETAIL 306B.
10. ALL BOLTS ASSOCIATED WITH THE WATERLINE CONSTRUCTION SHALL BE ZINC, CADMIUM OR STAINLESS STEEL, EXCEPT TEE BOLTS WHICH MAY BE DUCTILE IRON.
11. ACCEPTABLE FIRE HYDRANTS ARE: CLOW MEDALLION, KENNEDY K-81, MUELLER SUPER CENTURION OR M&H REGENT 129. ALL HYDRANTS SHALL BE PAINTED WITH "SAFETY ORANGE" PAINT, PITTSBURGH PAINT COLOR NO.90-313 GLOSS, OR APPROVED EQUAL.
12. ALL WATERLINE PIPES SHALL BE POLY-ENCASED AND INSTALLED VIA DIPRA'S WET TRENCH INSTALLATION METHOD.
13. FOR TRENCH COMPACTION A MINIMUM OF ONE FIELD DENSITY TEST SHALL BE CONDUCTED ON COMPACTED MATERIAL FOR EVERY 50 LINEAL FEET, OR FRACTION THEREOF, OF TRENCH AND FOR EVERY 3 FEET, OR FRACTION THEREOF, OF FILL PLACED. UNLESS OTHERWISE SPECIFIED, MECHANICAL COMPACTION OF ALL PIPE ZONE MATERIAL AND TRENCH BACKFILL MATERIAL IS REQUIRED. THE MATERIALS SHALL BE COMPACTED ACCORDING TO THE PIPE MANUFACTURER'S RECOMMENDATIONS AND IN LIFTS OF APPROPRIATE THICKNESS FOR THE TYPE OF EQUIPMENT BEING USED, TO A DENSITY OF 95% OF THE MAXIMUM RELATIVE DENSITY AS DETERMINED BY AASHTO T99.
14. VERFICATION OF BOTH HORIZONTAL AND VERTICAL ANGLE STOP ALIGNMENT SHALL BE PROVIDED IN WRITING BY THE ENGINEER OF RECORD.
15. CITY PERSONNEL SHALL BE NOTIFIED OF ALL PRESSURE TESTS A MINIMUM OF TWO (2) WORKING DAYS IN ADVANCE. TESTING SHALL BE PERFORMED PER A.W.W.A. STANDARDS AND THE TESTS SHALL BE CONDUCTED BY THE CONTRACTOR AND WITNESSED BY CITY PERSONNEL.
16. NEW WATERLINES MUST BE CHLORINATED TO A MINIMUM 25 PARTS PER MILLION (PPM) AND MUST HAVE A RESIDUAL OF 10 PPM AFTER 24 HOURS. AFTER CHLORINATED, WATERLINES SHALL BE FLUSHED TO ACHIEVE UPSTEAM MAIN LINE RESIDUAL. ALL HYPER-CHLORINATED WATER MUST BE FLUSHED INTO THE SANITARY SEWER SYSTEM. AFTER FLUSHING, THE LINE SHALL REMAIN CLOSED FOR AN ADDITIONAL 24 HOUR PERIOD.
17. MICROBIOLOGICAL SAMPLES SHALL BE TAKEN AFTER THE REGROWTH PERIOD IF THE CHLORINE RESIDUAL IS LESS THAN 1 PPM OR IF IT MATCHES THE RESIDUAL OF EXISTING WATERLINES UPSTREAM OF THE NEW WATERLINES. SAMPLES SHALL BE TAKEN IN CITY LAB (STATE APPROVED). IN THE EVENT THAT THE SAMPLE IS POSITIVE THE LINE SHALL BE RETESTED, INCLUDING CHLORINATION.

PIP14-1581

SR DESIGN
Engineering
Planning
8196 SW Hall Boulevard, Suite 101
Beaverton, Oregon 97008
phone (503) 469-1213
fax (503) 469-8553
www.srdllc.com

REGISTERED PROFESSIONAL ENGINEER
OREGON
SEPT. 14, 1982
STEVEN C. ROPER
EXPIRES 12-31-14

CONSTRUCTION NOTES
WILLAMETTE LANDING PHASE 9
695 SE RIVERGREEN AVENUE
CORVALLIS, OREGON
LEGEND HOMES CORP., PORTLAND, OR 97223

REV.	DESCRIPTION	DATE

PROJECT NO. LEG001
CASE FILE NO. PLD13-00009 SUB13-00002

DATE 5/15/14
DESIGNED S ROPER
ENGINEER S ROPER
CHECKED
SHEET TITLE NOTES
SHEET NUMBER C2

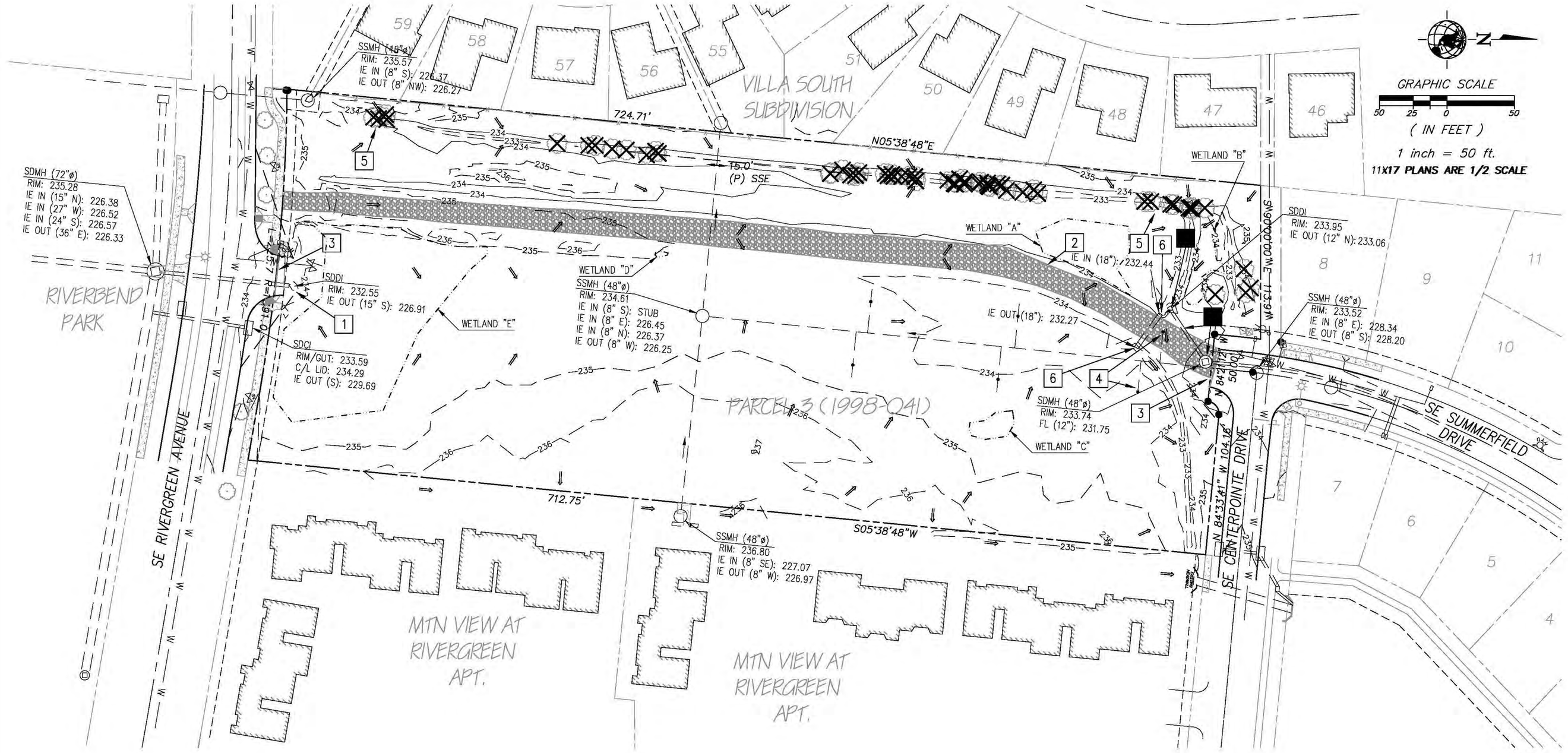

GRAPHIC SCALE

50 25 0 50

(IN FEET)

1 inch = 50 ft.

11X17 PLANS ARE 1/2 SCALE

LEGEND

- EXISTING BOUNDARY
- EXISTING PROPERTY LINE
- EXISTING ROW CENTERLINE
- EXISTING EASEMENT
- EXISTING BUILDING LINE
- EXISTING FENCE
- FOUND SURVEY MONUMENT
- EXISTING GAS
- EXISTING POWER
- EXISTING OVERHEAD LINE
- EXISTING 1' FOOT CONTOUR
- EXISTING 5' FOOT CONTOUR
- EXISTING SANITARY LINE
- EXISTING SANITARY MANHOLE
- EXISTING STORM LINE
- EXISTING STORM MANHOLE
- EXISTING CURB INLET
- EXISTING EDGE OF ASPHALT
- EXISTING EDGE OF CONCRETE
- EXISTING EDGE OF GRAVEL
- EXISTING WETLAND LINE
- EXISTING FLOW ARROW
- EXISTING WATER LINE
- EXISTING WATER VALVE
- EXISTING WATER METER
- EXISTING IRRIGATION VALVE
- EXISTING FIRE HYDRANT
- EXISTING LIGHT POLE
- EXISTING SIGN POST
- EXISTING TREE
- EXISTING TREE TO BE REMOVED

DEMOLITION NOTES:

1. DEMO EXISTING SDDI, PIPE TO REMAIN. REFER TO SHEET C100 FOR MORE INFO
2. DEMO EXISTING GRAVEL DRIVE
3. DEMO EXISTING BARRICADES BARRICADES & CONCRETE BLOCKS SHALL BE SALVAGED AND RETURNED TO THE CITY'S PUBLIC WORKS SHOPS. (1)
4. ABANDON AND DEMO (E) SANITARY LATERALS. REFER TO SHEET C200 FOR MORE INFO
5. REMOVE EXISTING TREES TYP.
6. DEMO EXISTING 18" CULVERT
7. DEMO EXISTING SDDI AND 12" PIPE
8. DEMO/REMOVE EXISTING 12" PIPE & SDMH. INSTALL CLEAN-OUT DOWNSTREAM MH. SEE SHEET C100.

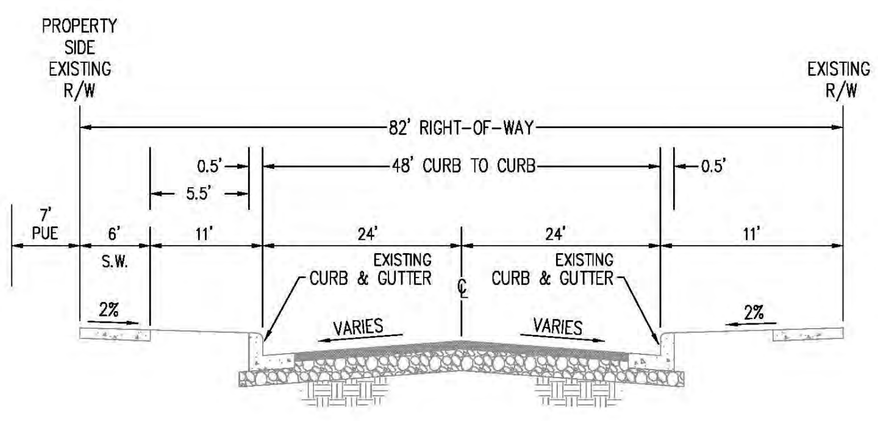

EXISTING SE RIVERGREEN AVENUE
NTS

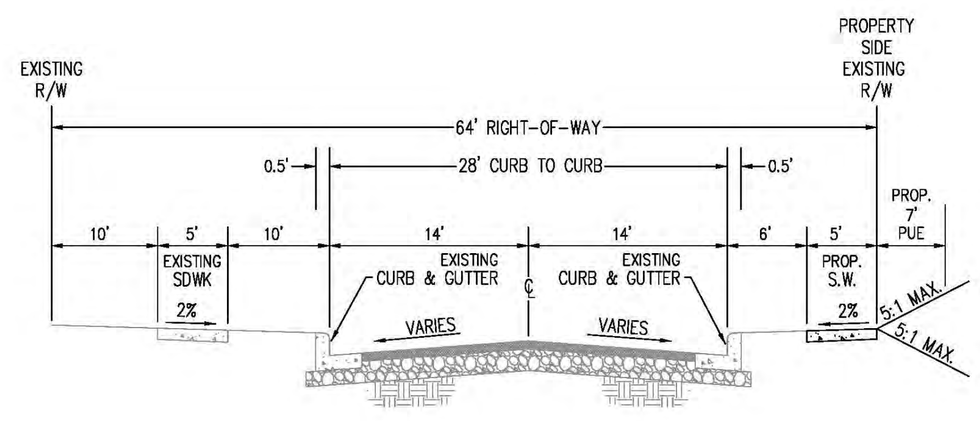

EXISTING SE CENTERPOINTE DRIVE
NTS

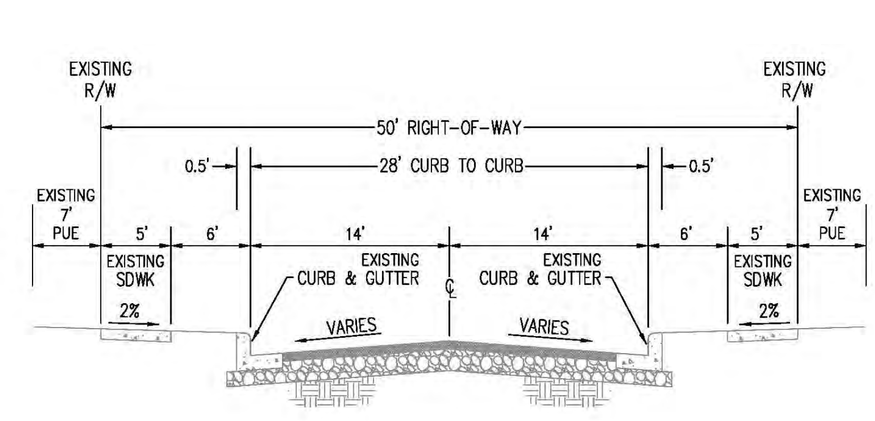

EXISTING SE SUMMERFIELD DRIVE
NTS

PIP14-1581

SR DESIGN
Engineering
Planning
8196 SW Hall Boulevard, Suite 101
Beaverton, Oregon 97008
phone (503) 469-1213
fax (503) 469-8553
www.srdllc.com

REGISTERED PROFESSIONAL ENGINEER 61 484 OREGON SEPT. 14, 1989 STEVEN C. ROPER
EXPIRES 12-31-14

EXISTING CONDITIONS PLAN
WILLAMETTE LANDING PHASE 9

695 SE RIVERGREEN AVENUE
CORVALLIS, OREGON
LEGEND HOMES CORP., PORTLAND, OR 97223

REV.	DESCRIPTION	DATE
1	PER CITY COMMENT	6/30/14

PROJECT NO. LEG001
CASE FILE NO. PLD13-00009 SUB13-00002

DATE 5/15/14
DESIGNED S ROPER
ENGINEER S ROPER
CHECKED
SHEET TITLE EXISTING
SHEET NUMBER C3

Enclosure

LEGEND

- EXISTING BOUNDARY
- EXISTING PROPERTY LINE
- EXISTING ROW CENTERLINE
- EXISTING EASEMENT
- EXISTING BUILDING LINE
- EXISTING FENCE
- EXISTING GAS
- EXISTING POWER
- EXISTING OVERHEAD LINE
- EXISTING 1' FOOT CONTOUR
- EXISTING 5' FOOT CONTOUR
- EXISTING SANITARY LINE
- EXISTING SANITARY MANHOLE
- EXISTING STORM LINE
- EXISTING STORM MANHOLE
- EXISTING CURB INLET
- EXISTING EDGE OF ASPHALT
- EXISTING EDGE OF CONCRETE
- EXISTING EDGE OF GRAVEL
- PROPOSED LOT LINE
- PROPOSED CURB LINE
- PROPOSED 1' FOOT CONTOUR
- PROPOSED 5' FOOT CONTOUR
- PROPOSED FLOW ARROW
- PROPOSED EROSION CONTROL FENCE
- PROPOSED CURB INLET
- GRAVEL CONSTRUCTION ENTRANCE
- CUT AREA
- FILL AREA

GRADING QUANTITIES

CUT: 260 CY

FILL: 1,865 CY

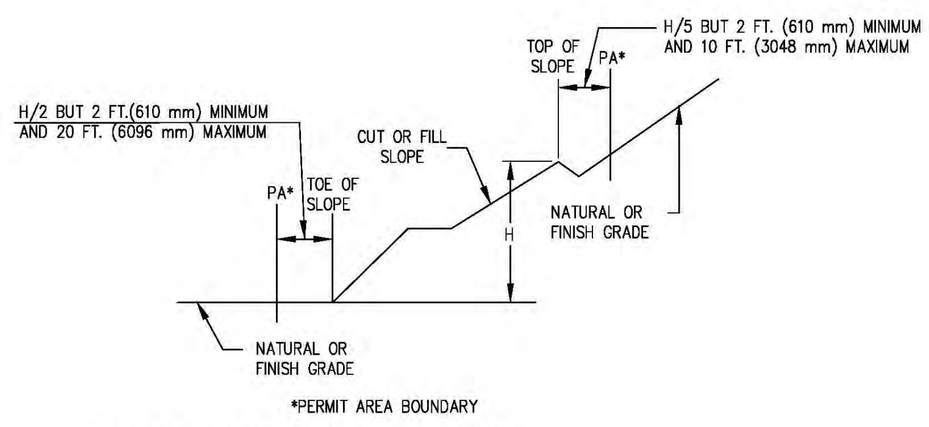

TYPICAL GRADING SETBACK REQUIREMENTS
NTS
BASED ON FIGURE A-33-1

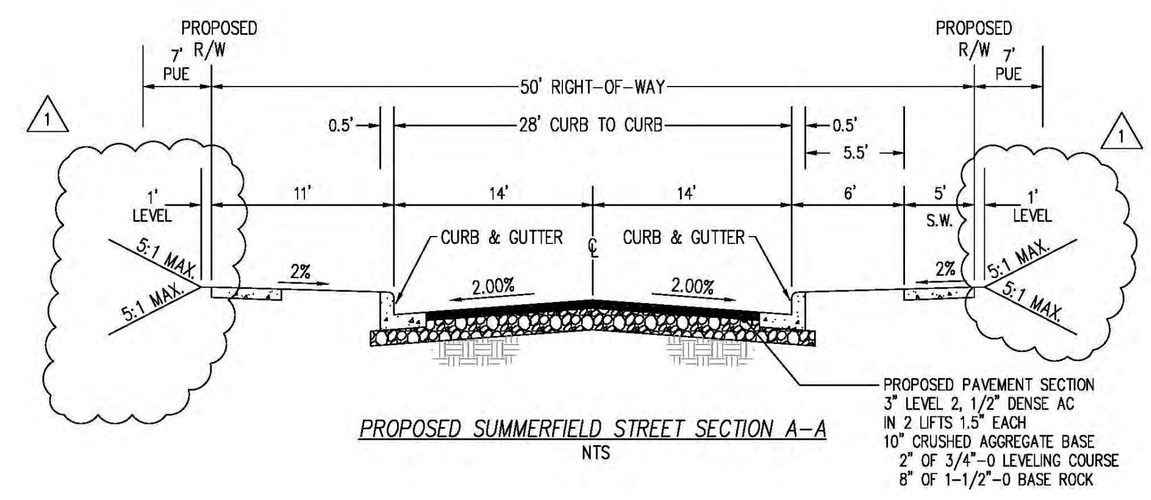

PROPOSED SUMMERFIELD STREET SECTION A-A
NTS

PIP14-1581

SR DESIGN
Engineering
Planning
8196 SW Hall Boulevard, Suite 101
Beaverton, Oregon 97008
phone (503) 469-1213
fax (503) 469-8553
www.srdllc.com

REGISTERED PROFESSIONAL ENGINEER
OREGON
STEVEN C. ROPER
SEPT. 14, 1982
EXPIRES 12-31-14

GRADING PLAN
WILLAMETTE LANDING PHASE 9

695 SE RIVERGREEN AVENUE
CORVALLIS, OREGON
LEGEND HOMES CORP., PORTLAND, OR 97223

REV.	DESCRIPTION	DATE
1	PER CITY COMMENT	6/30/14

PROJECT NO. LEG001
CASE FILE NO. PLD13-00009 SUB13-00002

DATE 5/15/14
DESIGNED S ROPER
ENGINEER S ROPER
CHECKED
SHEET TITLE GRADING
SHEET NUMBER C4

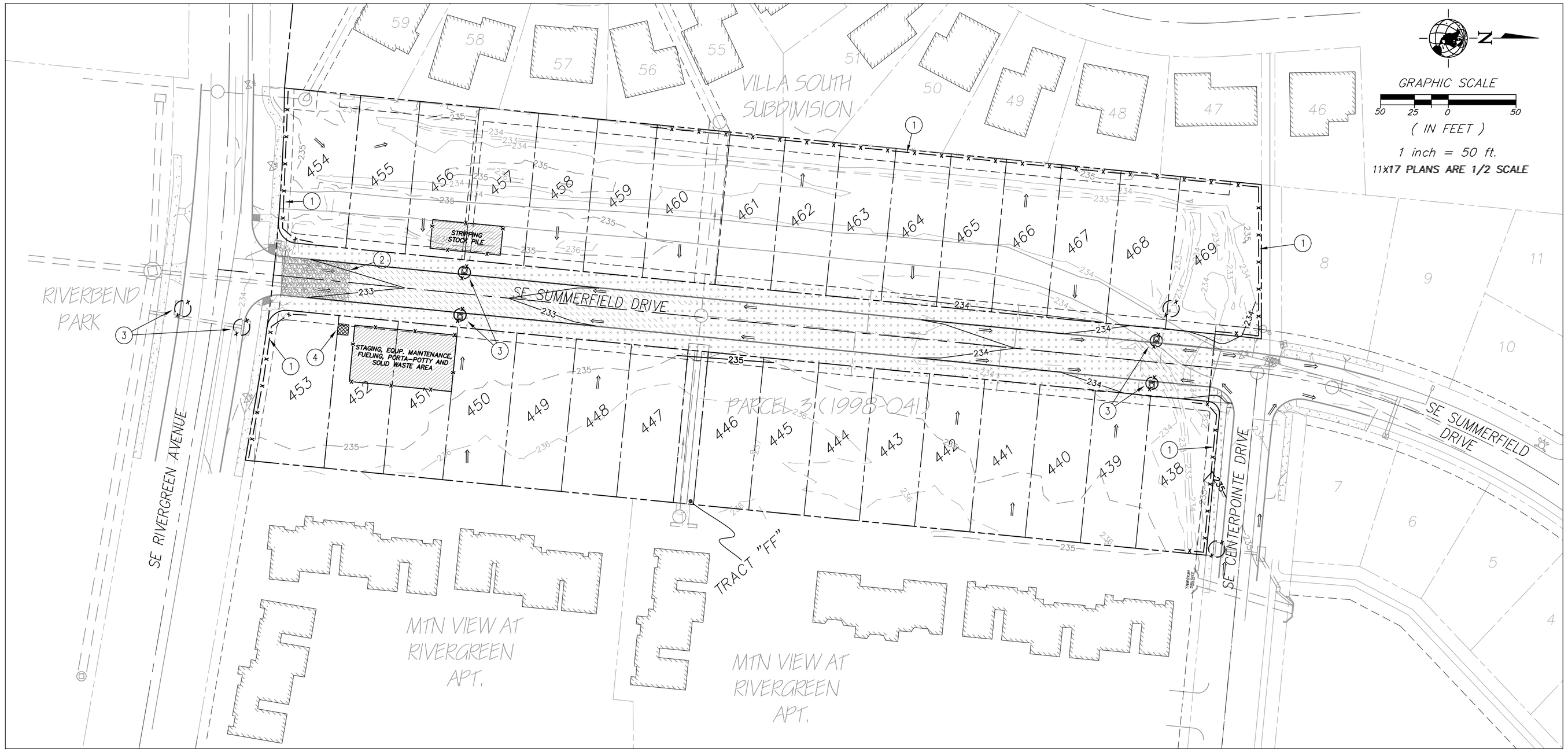

LEGEND

- EXTG BOUNDARY LINE
- EXTG 1' CONTOUR LINE (504)
- EXTG 5' CONTOUR LINE (505)
- EXTG EASEMENT
- EXTG LOT LINE
- PROP PUE
- PROP EASEMENT
- PROP LOT LINE
- PROP 1' CONTOUR LINE (504)
- PROP 5' CONTOUR LINE (505)
- PROP CURB INLET
- PROP CURB LINE
- PROP EROSION CONTROL FENCE
- PROP SIDEWALK
- INLET PROTECTION
- GRAVEL CONSTRUCTION ENTRANCE
- PROPOSED FLOW ARROW
- CONCRETE WASHOUT AREA
- CUT AREA (9,926 SF)
- FILL AREA (29,759 SF)

EROSION CONTROL NOTES

1. INSTALL SEDIMENT CONTROL FENCING (TYP.)
2. INSTALL GRAVEL CONSTRUCTION ENTRANCE (TYP.)
3. INSTALL INLET PROTECTION (TYP.)
4. INSTALL 8' x 8' x 1' DP CONCRETE WASHOUT PIT

THESE EROSION AND SEDIMENT CONTROL PLANS ASSUME "DRY WEATHER" CONDITIONS. "WET WEATHER" CONSTRUCTION MEASURES NEED TO BE APPLIED BETWEEN OCTOBER 1ST AND MAY 31ST.

EROSION AND SEDIMENT CONTROL BMP IMPLEMENTATION:

1. ALL BASE ESC MEASURES (INLET PROTECTION, PERIMETER SEDIMENT CONTROL, GRAVEL CONSTRUCTION ENTRANCES, ETC.) MUST BE IN PLACE, FUNCTIONAL, AND APPROVED IN AN INITIAL INSPECTION, PRIOR TO COMMENCEMENT OF CONSTRUCTION ACTIVITIES.
2. ALL SEDIMENT FENCING (TO BE INSTALLED AFTER GRADING) SHALL BE INSTALLED IMMEDIATELY FOLLOWING ESTABLISHMENT OF FINISHED GRADE AS SHOWN ON THESE PLANS.
3. LONG TERM SLOPE STABILIZATION MEASURES SHALL BE IN PLACE OVER ALL EXPOSED SOILS BY OCTOBER 1. IF VEGETATION IS NOT ESTABLISHED STRAW COVER WILL BE NECESSARY.
4. TEMPORARY SEEDING WILL NEED TO BE DONE BY SEPTEMBER 1 OR EARLIER TO ENSURE ALL EXPOSED SOILS ARE COVERED BY OCTOBER 1. IF VEGETATION IS NOT ESTABLISHED STRAW COVER WILL BE NECESSARY.
5. INLET PROTECTION SHALL BE IN-PLACE IMMEDIATELY FOLLOWING PAVING ACTIVITIES.

GRADING, STREET AND UTILITY EROSION AND SEDIMENT CONSTRUCTION NOTES:

1. SEED USED FOR TEMPORARY OR PERMANENT SEEDING SHALL BE COMPOSED OF THE FOLLOWING MIXTURE, UNLESS OTHERWISE AUTHORIZED:
   A. DWARF GRASS MIX (MIN. 100 LB./AC.)
      1. DWARF PERENNIAL RYEGRASS (80% BY WEIGHT)
      2. CREEPING RED FESCUE (20% BY WEIGHT)
   B. STANDARD HEIGHT GRASS MIX (MIN. 100 LB./AC.)
      1. ANNUAL RYEGRASS (80% BY WEIGHT)
      2. TURF-TYPE FESCUE (20% BY WEIGHT)

2. SLOPE TO RECEIVE TEMPORARY OR PERMANENT SEEDING SHALL HAVE THE SURFACE ROUGHENED BY MEANS OF TRACK-WALKING OR THE USE OF OTHER APPROVED IMPLEMENTS. SURFACE ROUGHENING IMPROVES SEED BEDDING AND REDUCES RUN-OFF VELOCITY.

3. LONG TERM SLOPE STABILIZATION MEASURES SHALL INCLUDE: THE ESTABLISHMENT OF PERMANENT VEGATATIVE COVER VIA SEEDING WITH APPROVED MIX AND APPLICATION RATE. PLACEMENT OF SOD, ESTABLISHMENT OF GROUND COVERING SHRUBS OR OTHER APPROVED MEASURES.

4. TEMPORARY SLOPE STABILIZATION MEASURES SHALL BE STRAW MULCHING OR OTHER APPROVED MEASURES.

5. AREAS SUBJECT TO WIND EROSION SHALL USE APPROPRIATE DUST CONTROL MEASURES INCLUDING THE APPLICATION OF A FINE SPRAY OF WATER, PLASTIC SHEETING, STRAW MULCHING OR OTHER APPROVED MEASURES

6. CONSTRUCTION ENTRANCES SHALL BE INSTALLED AT THE BEGINNING OF CONSTRUCTION AND MAINTAINED FOR THE DURATION OF THE PROJECT. ADDITIONAL MEASURES INCLUDING, BUT NOT LIMITED TO, TIRE WASHES, STREET SWEEPING, AND VACUUMING MAY BE REQUIRED TO INSURE THAT ALL PAVED AREAS ARE KEPT CLEAN FOR THE DURATION OF THE PROJECT.

7. ACTIVE INLETS TO STORM WATER SYSTEMS SHALL BE PROTECTED THROUGH THE USE OF BIOBAGS OR OTHER APPROVED INLET PROTECTION SYSTEMS. ALL INLET PROTECTION SYSTEMS ARE TO BE REGULARLY INSPECTED AND MAINTAINED AS NEEDED.

8. AN AREA SHALL BE PROVIDED FOR THE WASHING OUT OF CONCRETE TRUCKS IN A LOCATION THAT DOES NOT PROVIDE RUN-OFF THAT CAN ENTER THE STORM WATER SYSTEM. IF THE CONCRETE WASH-OUT AREA CAN NOT BE CONSTRUCTED GREATER THAN 50' FROM ANY DISCHARGE POINT, SECONDARY MEASURES SUCH AS BERMS OR TEMPORARY SETTLING PITS MAY BE REQUIRED. THE WASH-OUT SHALL BE LOCATED WITHIN SIX FEET OF TRUCK ACCESS AND BE CLEANED WHEN IT REACHES 50% OF THE CAPACITY.

9. AVOID PAVING IN WET WEATHER WHEN PAVING CHEMICALS CAN RUN-OFF INTO THE STORM WATER SYSTEM.

10. USE BMP'S SUCH AS CHECK-DAMS, BERMS, AND INLET PROTECTION TO PREVENT RUN-OFF FROM REACHING DISCHARGE POINTS.

11. COVER CATCH BASINS, MANHOLES, AND OTHER DISCHARGE POINTS WHEN APPLYING SEAL COAT, TACK COAT, ETC. TO PREVENT INTRODUCING THESE MATERIALS TO THE STORM SYSTEM.

12. STOCKPILED SOIL OR STRIPPINGS SHALL BE PLACED IN A STABLE LOCATION AND CONFIGURATION DURING "WET WEATHER" PERIODS, STOCKPILES SHALL BE COVERED WITH PLASTIC SHEETING OR STRAW MULCH, SEDIMENT FENCE IS REQUIRED AROUND THE PERIMETER OF THE STOCKPILE.

13. EXPOSED CUT OR FILL AREAS SHALL BE STABILIZED THROUGH THE USE OF TEMPORARY SEEDING AND MULCHING, EROSION CONTROL BLANKETS OR MATS, MID-SLOPE SEDIMENT FENCES OR WATTLES, OR OTHER APPROPRIATE MEASURES, SLOPES EXCEEDING 25% MAY REQUIRE ADDITIONAL EROSION CONTROL MEASURES.

14. SWEEPINGS FROM EXPOSED AGGREGATE CONCRETE SHALL NOT BE TRANSFERRED TO TO THE STORM WATER SYSTEM. SWEEPINGS SHALL BE PICKED UP AND DISPOSED IN THE TRASH. 15. COVER CATCH BASINS, MANHOLES, AND OTHER DISCHARGE POINTS WHEN APPLYING SEAL COAT, TACK COAT, ETC. TO PREVENT INTRODUCING THESE MATERIALS TO THE STORM MATERIALS TO THE STORM WATER SYSTEM.

SDR DESIGN LLC
Engineering
Planning
8196 SW Hall Boulevard, Suite 101
Beaverton, Oregon 97008
phone (503) 469-1213
fax (503) 469-8553
www.sdllc.com

REGISTERED PROFESSIONAL ENGINEER 61,452
OREGON Sept. 14, 1989 STEVEN C. ROPER
EXPIRES 12-31-14

GRADING, STREET AND UTILITY CONSTRUCTION EROSION AND SEDIMENT CONTROL PLAN WILLAMETTE LANDING PHASE 9

695 SE RIVERGREEN AVENUE
CORVALLIS, OREGON
LEGEND HOMES CORP., PORTLAND, OR 97223

REV.	DESCRIPTION	DATE

PROJECT NO. LEG001
CASE FILE NO. PLD13-00009 SUB13-00002

DATE 5/15/14
DESIGNED S ROPER
ENGINEER S ROPER
CHECKED
SHEET TITLE GRADING/EROSION
SHEET NUMBER ESC-3

Enclosure

LEGEND

- EXISTING BOUNDARY
- EXISTING PROPERTY LINE
- EXISTING ROW CENTERLINE
- EXISTING EASEMENT
- EXISTING SANITARY LINE
- EXISTING SANITARY MANHOLE
- EXISTING STORM LINE
- EXISTING STORM MANHOLE
- EXISTING CURB INLET
- EXISTING EDGE OF ASPHALT
- PROPOSED LOT LINE
- PROPOSED SANITARY LINE
- PROPOSED SANITARY MANHOLE
- PROPOSED WATER LINE
- PROPOSED WATER METER
- PROPOSED FIRE HYDRANT
- PROPOSED STORM LINE
- PROPOSED PRIVATE STORM LINE
- PROPOSED CURB INLET
- PROPOSED CLEAN OUT
- PROPOSED TREE
- PROPOSED TRANSFORM VAULT

PIP14-1581

SR DESIGN
Engineering
Planning
8196 SW Hall Boulevard, Suite 101
Beaverton, Oregon 97008
phone (503) 469-1213
fax (503) 469-8553
www.srdlc.com

REGISTERED PROFESSIONAL ENGINEER
OREGON
SEPT. 14, 1982
STEVEN C. ROPER
EXPIRES 12-31-14

COMPOSITE UTILITY / TREE PLAN
WILLAMETTE LANDING PHASE 9

695 SE RIVERGREEN AVENUE

CORVALLIS, OREGON

LEGEND HOMES CORP., PORTLAND, OR 97223

REV.	DESCRIPTION	DATE
1	PER CITY COMMENT	6/30/14

PROJECT NO. LEG001

CASE FILE NO. PLD13-00009 SUB13-00002

DATE 5/15/14
DESIGNED S ROPER
ENGINEER S ROPER
CHECKED

SHEET TITLE
UTILITY / TREE

SHEET NUMBER
C7

STREET PLAN / STORM PROFILE
WILLAMETTE LANDING PHASE 9
695 SE RIVERGREEN AVENUE
CORVALLIS, OREGON
LEGEND HOMES CORP., PORTLAND, OR 97223

REV.	DESCRIPTION	DATE
1	PER CITY COMMENT	6/30/14

PROJECT NO. LEG001
CASE FILE NO. PLD13-00009 SUB13-00002

DATE 5/15/14
DESIGNED S ROPER
ENGINEER S ROPER
CHECKED
SHEET TITLE STREET / STORM
SHEET NUMBER C100

REGISTERED PROFESSIONAL ENGINEER 61432 OREGON SEPT. 14 1999 STEVEN C. ROPER
EXPIRES 12-31-14

SR DESIGN LLC
8196 SW Hall Boulevard, Suite 101
Beaverton, Oregon 97008
phone (503) 469-1213
fax (503) 469-8553
www.srdllc.com
Planning | Engineering

PIP14-1581

LEGEND

- EXISTING BOUNDARY
- EXISTING PROPERTY LINE
- EXISTING ROW CENTERLINE
- EXISTING EASEMENT
- EXISTING BUILDING LINE
- EXISTING FENCE
- EXISTING GAS
- EXISTING POWER
- EXISTING OVERHEAD LINE
- EXISTING SANITARY LINE
- EXISTING SANITARY MANHOLE
- EXISTING STORM LINE
- EXISTING STORM MANHOLE
- EXISTING CURB INLET
- EXISTING EDGE OF ASPHALT
- PROPOSED LOT LINE
- PROPOSED SANITARY LINE
- PROPOSED SANITARY MANHOLE
- PROPOSED WATER LINE
- PROPOSED WATER METER
- PROPOSED FIRE HYDRANT
- PROPOSED STORM LINE
- PROPOSED PRIVATE STORM LINE
- PROPOSED CURB INLET
- PROPOSED CLEAN OUT

STREET NOTES CONTINUED

3. STA: 7+42.72, 14.00 LT SE SUMMERFIELD DR. MATCH IMPROVEMENTS TO EXISTING FACE OF CURB MATCH TC ELEV =233.94
4. STA: 7+37.60, 14.00 RT SE SUMMERFIELD DR. MATCH IMPROVEMENTS TO EXISTING FACE OF CURB MATCH TC ELEV =233.08
5. STA: 1+37.81, SE CENTERPOINTE DR. MATCH TO EXISTING SIDEWALK
6. STA: 7+37.07, SE SUMMERFIELD DR. END PROPOSED SIDEWALK IMPROVEMENTS
7. STA: 7+51.28, 19.79 RT SE SUMMERFIELD DR. CENTER OF EXISTING RAMP AT FACE OF CURB RAMP PER DETAIL 107, RAMP "B"
8. STA: 3+51.20, SE SUMMERFIELD DR. BEGIN PROPOSED SIDEWALK IMPROVEMENTS
9. STA: 3+66.20, SE SUMMERFIELD DR. END PROPOSED SIDEWALK IMPROVEMENTS
10. PROPOSED 1' SAWCUT AND MATCH EXISTING A/C
11. END PRIVATE SIDEWALK AT PROPERTY LINE REFER TO PROPOSED SIDEWALK SECTION B-B ON THIS SHEET
12. CONSTRUCT 5' WIDE SIDEWALK WITH SITE DEVELOPMENT PER DETAIL 106
13. STA: 7+50.51, 25' LT BEGIN 5' SIDEWALK CONSTRUCTION STA: 7+85.08, 25' LT END 5' SIDEWALK CONSTRUCTION
14. STA: 7+53.00, 14' LT SE SUMMERFIELD DR. CONSTRUCT 5' SIDEWALK RAMP PER DETAIL 107A RAMP "C" W/ WINGS. WILL REQUIRE REMOVAL OF 11.5' CURB MIN.
15. STA: 7+78.77, 14' LT SE SUMMERFIELD DR. CONSTRUCT 4' SIDEWALK RAMP PER DETAIL 107A RAMP "C" W/ WINGS WITHIN EXISTING CURB DROP.
16. PRIVATE 5' SIDEWALK, REQUIRES SEPARATE PERMIT FROM DEVELOPMENT SERVICES.

1

GRAPHIC SCALE
1 inch = 50 ft.
11x17 PLANS ARE 1/2 SCALE
(IN FEET)

STA: 7+70.95 SUMMERFIELD =
STA: 0+00.00 CENTERPOINTE

SE SUMMERFIELD DRIVE

SE CENTERPOINTE DRIVE

TRACT "GG"

SE RIVERGREEN AVENUE

PRIVATE STORM DRAIN

(E) SDCI

(E) SDMH A-1

PC = 3+65

STA: 5+00.00 RIVERGREEN =
STA: 0+00.00 SUMMERFIELD

REFER TO SHEET C4 FOR PROPOSED SUMMERFIELD STREET SECTION A-A

* FUTURE SIDEWALKS ALONG LOT FRONTAGES TO BE BUILT WITH HOME CONSTRUCTION.

15' WIDE TRACT "FF"
5' 5' S.W. 5' 5'
2% 5:1 MAX. 5:1 MAX.
SIDEWALK SECTION
-4" PCC
-MIN. 12" OF 3/4"-0 AGGREGATE BASE

PROPOSED PRIVATE SIDEWALK SECTION B-B
NTS

STREET NOTES

1. STA: 0+46.20, 14.00 LT SE SUMMERFIELD DR. MATCH IMPROVEMENTS TO EXISTING FACE OF CURB MATCH TC ELEV =233.61
2. STA: 0+47.96, 14.00 RT SE SUMMERFIELD DR. MATCH IMPROVEMENTS TO EXISTING FACE OF CURB MATCH TC ELEV =233.72

CATCH BASIN NOTES

PROPOSED SDCB A-4.1 (CG-3) CURB INLET
STA: 6+94.34, 14.00' LT SUMMERFIELD
INSTALL 26.1 LF 10" C-900 @ S=0.004
TC: 233.69
NORMAL GUTTER EL: 233.19
DEPRESSED GUTTER EL: 233.02
IE OUT (10" E): 230.30

PROPOSED SDCB A-4.2 (CG-3) CURB INLET
STA: 6+94.24, 14.00' RT SUMMERFIELD
INSTALL 14.8 LF 10" C-900 @ S=0.004
TC: 233.69
NORMAL GUTTER EL: 233.19
DEPRESSED GUTTER EL: 233.02
IE OUT (10" S): 230.26

PROPOSED SDCB A-2.1 (CG-3) CURB INLET
STA: 1+81.00, 14.00' LT SUMMERFIELD
INSTALL 22.8 LF 10" PVC @ S=0.0050
TC: 233.00
NORMAL GUTTER EL: 232.50
DEPRESSED GUTTER EL: 232.33
IE OUT (10" E): 228.50

PROPOSED SDCB A-2.2 (CG-3) CURB INLET
STA: 1+81.00, 14.00' RT SUMMERFIELD
INSTALL 7.8 LF 10" PVC @ S=0.0140
TC: 233.00
NORMAL GUTTER EL: 232.50
DEPRESSED GUTTER EL: 232.33
IE OUT (10" W): 228.50

PUBLIC STORM NOTES CONT.

1P. REMOVE (E) SDDI A-1 AND CONNECT TO (E) PIPE REFER TO PROFILE ON THIS SHEET FOR INFO
2P. AFTER REMOVING 48"ø MH, INSTALL CLEAN-OUT. RIM: 233.61 IE: 231.75
3P. INSTALL 8" LATERAL FOR PRIVATE STORM LINE 38.7 LF 8" @ SL = S=0.0050

PRIVATE STORM NOTES CONT.

1. 43.0 LF OF 6" PVC D3034 @ S=0.0490
2. PROPOSED PRIVATE STORM CLEANOUT RIM: 234.4±, 8" IE: 228.33
3. 100.00 LF OF 6" PVC D3034 @ S=0.0050
4. PROPOSED PRIVATE STORM CLEANOUT RIM: 235.0±, 6" IE: 231.00
5. PROPOSED PRIVATE STORM CLEANOUT RIM: 234.3±, 6" IE: 231.50
6. PROPOSED PRIVATE STORM CLEANOUT RIM: 234.8±, 8" IE: 229.11
7. PROPOSED PRIVATE STORM CLEANOUT RIM: 234.8±, 8" IE: 229.61
8. PROPOSED PRIVATE STORM CLEANOUT RIM: 234.6±, 8" IE: 230.11, 6" IE: 230.19 INSTALL 8"x6" REDUCER BELOW C/O
9. PROPOSED PRIVATE STORM CLEANOUT RIM: 234.5±, 6" IE: 230.69
10. PROPOSED PRIVATE STORM CLEANOUT RIM: 235.6±, 6" IE: 231.19
11. 50.00 LF OF 6" PVC D3034 @ S=0.0050
12. PROPOSED PRIVATE STORM CLEANOUT RIM: 234.5±, 6" IE: 231.44
13. PROPOSED FUTURE PRIVATE CONNECTION INSTALL 4"x6" PVC D3034 WYE FITTING, 4" PVC D3034 @ S=0.0200 MINIMUM, AND 4" PLUG AT EDGE OF EASEMENT. FINAL LOCATIONS TO BE DETERMINED ON SITE.
14. NO STORM LATERAL BUILT FOR THIS LOT. INSTALL WEEPHOLES THROUGH CURB.
15. 55.2 LF OF 8" PVC D3034 @ S=0.0051
16. PROPOSED PRIVATE STORM CLEANOUT RIM: 234.8±, 8" IE: 228.82
17. INSTALL 8"x6" WYE CONNECTION 8" IE: 228.81, 6" IE: 228.89
18. PROPOSED FUTURE PRIVATE CONNECTION INSTALL 8"X4" PVC D3034 WYE FITTING, 4" PVC D3034 @ S=0.0200 MINIMUM, AND 4" PLUG AT EDGE OF EASEMENT. FINAL LOCATIONS TO BE DETERMINED ON SITE.
19. 100.00 LF OF 8" PVC D3034 @ S=0.0051
20. STORM LATERAL W/ CLEAN-OUT TO BE CONSTRUCTED FOR THIS LOT. REFER TO STORM LATERAL TABLE AND NOTES THIS SHEET.

STORM LATERAL NOTES

*ALL STORM LATERALS TO BE 4" PVC AND MEET ASTM D3034 UNLESS OTHERWISE SPECIFIED ON PLANS. LATERALS & CLEAN-OUTS TO BE BUILT PER DTLS 206 & 206A. SEE SHEET C102

*ALL STORM LATERALS TO BE INSTALLED AT S=0.0200 MINIMUM.

*CLEAN-OUT FOR LATERALS SERVING LOTS 441-453 TO BE INSTALLED 1' WEST OF R/W LINE.

*(DTSC) DENOTES LATERAL TO BE INSTALLED AS 'DEEP TRENCH SERVICE CONNECTION' SHOWN IN DETAIL 206A. REFER TO SHEET C102

*(PSD) DENOTES PRIVATE STORM DRAIN LATERAL

*(S.W.) DENOTES SIDEWALK

*4" SS (E) DENOTES 4" LATERAL TO THE EAST

*(S.M.) DENOTES SHALLOW MANHOLE

1

STORM DRAIN LATERALS

LOT#	SD STATION	LF	DEPTH (FT)	IE @ END	C/O RIM	C/O I.E.
438	WEEP HOLE	N/A	N/A	N/A	N/A	N/A
439	WEEP HOLE	N/A	N/A	N/A	N/A	N/A
440	WEEP HOLE	N/A	N/A	N/A	N/A	N/A
441	6+24.39	25.5	4.4	230.2	234.44	230.04
442	6+14.39	25.5	4.4	230.2	234.49	230.00
443	5+44.89	25.5	5.0	229.9	234.78	229.72
444	5+30.89	25.5	5.0	229.9	234.71	229.70
445	4+60.39	25.5	4.9	229.6	234.36	229.38
446	4+50.39	25.5	5.0	229.5	234.31	229.34
447	3+62.29	25.5	4.8	229.2	233.87	228.99
448	3+52.29	25.5	4.9	229.1	233.81	228.95
449	2+77.29	25.5	4.8	228.8	233.44	228.65
450	2+62.29	25.5	4.7	228.8	233.37	228.59
451	1+89.29	25.7	5.0	228.5	233.36	228.27
452	1+79.29	25.8	5.0	228.6	233.40	228.32
453	1+35.42	26.1	5.0	228.7	233.58	228.31
454	WEEP HOLE	N/A	N/A	N/A	N/A	N/A
455	WEEP HOLE	N/A	N/A	N/A	N/A	N/A
456	WEEP HOLE	N/A	N/A	N/A	N/A	N/A
457	WEEP HOLE	N/A	N/A	N/A	N/A	N/A
458	WEEP HOLE	N/A	N/A	N/A	N/A	N/A
459	WEEP HOLE	N/A	N/A	N/A	N/A	N/A
460	WEEP HOLE	N/A	N/A	N/A	N/A	N/A
461	WEEP HOLE	N/A	N/A	N/A	N/A	N/A
462	WEEP HOLE	N/A	N/A	N/A	N/A	N/A
463	WEEP HOLE	N/A	N/A	N/A	N/A	N/A
464	WEEP HOLE	N/A	N/A	N/A	N/A	N/A
465	WEEP HOLE	N/A	N/A	N/A	N/A	N/A
466	WEEP HOLE	N/A	N/A	N/A	N/A	N/A
467	WEEP HOLE	N/A	N/A	N/A	N/A	N/A
468	WEEP HOLE	N/A	N/A	N/A	N/A	N/A
469	WEEP HOLE	N/A	N/A	N/A	N/A	N/A
PSD	2+72.28	8" IE @ MAIN: 228.14				

STORM LINE "A" SUMMERFIELD C/L PROFILE
SCALE: 1"=50' HORIZ. 1"=5' VERT.

C/L INTERSECTION = 1+70.95 SUMMERFIELD DR = 0+00.00 SE CENTERPOINTE DR ELEV = 233.52

SAWCUT EXISTING A/C END A/C IMPROVEMENTS MATCH STA = 7+40.91 MATCH ELEV = 233.71

PV ELEV = 233.52 PV STA = 6+94.24

SDCB A-4 (CG-3) SEE STORM NOTES THIS SHEET

SDMH A-4 (48"ø S.M.) STA: 6+81.65, 7.55' RT SE SUMMERFIELD DR =SD STA: 7+29.80 LINE "A" RIM: 233.42 IE IN (10" NW): 230.20 IE IN (10" NE): 230.20 IE OUT (12" S): 230.00 PER DETAIL 203

58.0 LF 12" PVC C-900 @ S=0.0040

443.6 LF 12" PVC D3034 @ S=0.0040

PV ELEV = 234.42 PV STA = 5+00

STA: 1+80.00, 7.55' RT SE SUMMERFIELD DR =SD STA: 2+28.18 LINE "A" RIM: 232.68 IE IN (12" N): 227.79 IE IN (10" W): 228.39 IE IN (10" E): 228.39 IE OUT (15" S): 227.59 PER DETAIL 203

SD STA: 2+72.28 INSTALL 12"x8" TEE IE (12"): 227.97 IE (8"W): 228.14

PV ELEV = 232.83 PV STA = 1+81

SDMH A-2 (48"ø) STA: 1+80.00, 7.55' RT SE SUMMERFIELD DR =SD STA: 2+28.18 LINE "A"

128.8 LF 15" PVC D3034 @ S=0.0053

PV ELEV = 233.25 PV STA = 0+75

REMOVE EXISTING STRUCTURE AND CONNECT TO (E) PIPE (E) IE (15"): 226.91

MATCH ELEV = 233.54

SAWCUT EXISTING A/C BEGIN A/C IMPROVEMENTS MATCH STA = 0+46.08

(E) SDDI A-1 STA: 0+51.20, 6.60' RT SE SUMMERFIELD DR =SD STA: 0+99.38 SD LINE "A"

99.4 LF @ S=0.0053

(E) SDMH A-1 (72"ø) STA: 5+06.58, 48.11' RT SE RIVERGREEN AVE =SD STA: 0+00.0 SD LINE "A" RIM: 235.28 IE IN (15" N): 226.38 IE IN (27" W): 226.52 IE IN (24" S): 226.57 IE OUT (36" E): 226.33

CLASS "B" BACKFILL PER DTL 201

EG @ ℄ FG @ ℄

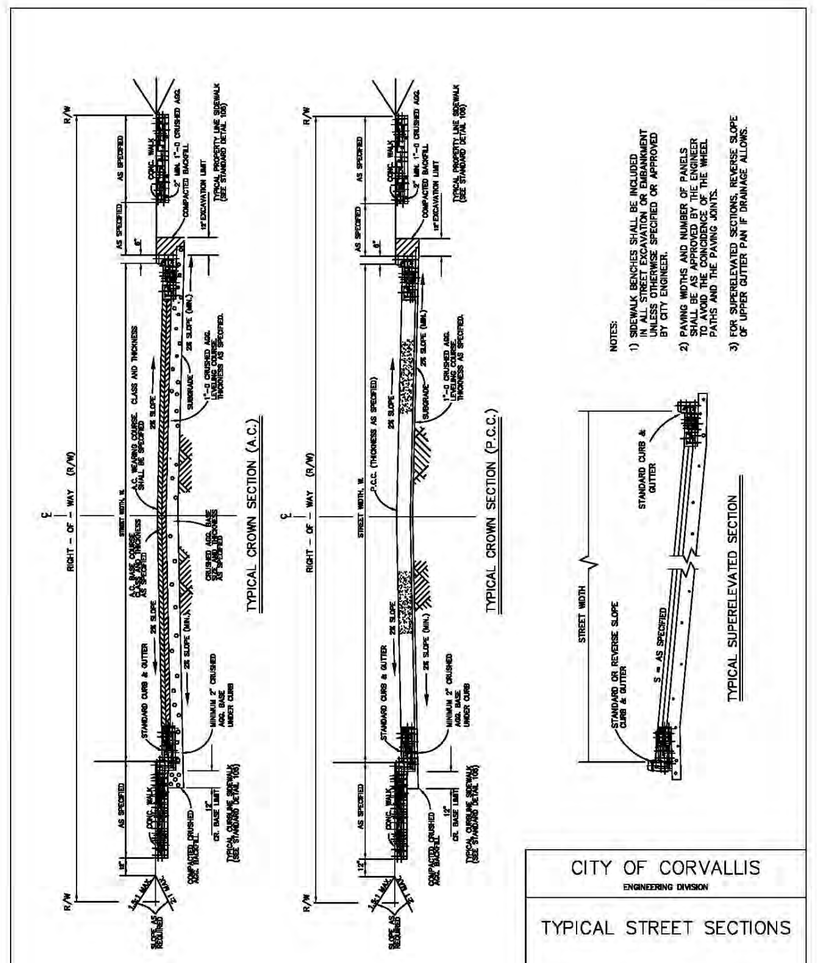

CITY OF CORVALLIS
ENGINEERING DIVISION

TYPICAL STREET SECTIONS

DATE: JANUARY, 2003	SCALE: NONE	STANDARD DETAIL No.
APPROVED:		101

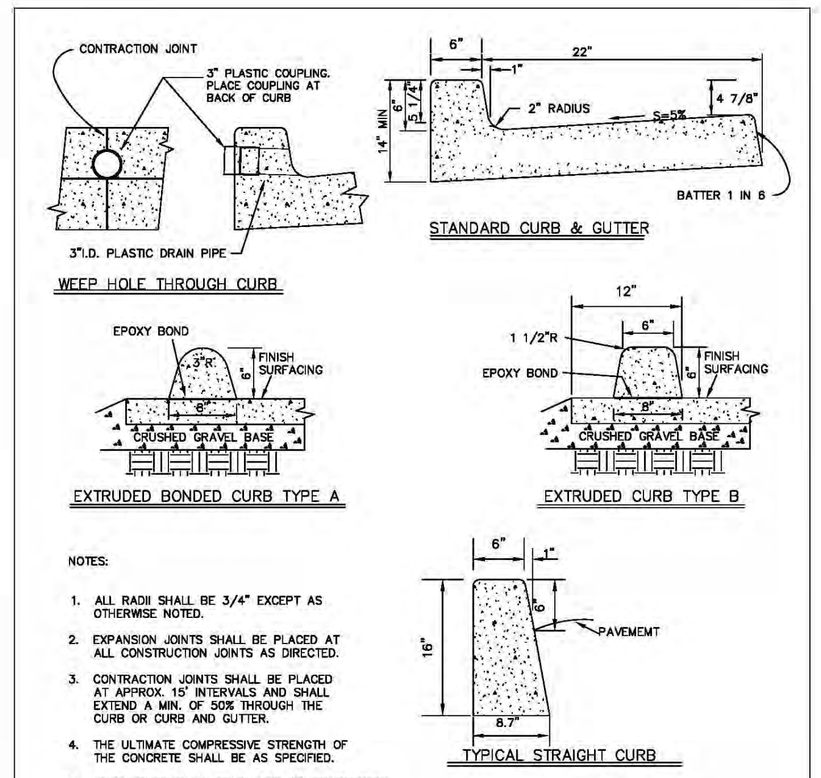

NOTES:

1. ALL RADII SHALL BE 3/4" EXCEPT AS OTHERWISE NOTED.
2. EXPANSION JOINTS SHALL BE PLACED AT ALL CONSTRUCTION JOINTS AS DIRECTED.
3. CONTRACTION JOINTS SHALL BE PLACED AT APPROX. 15' INTERVALS AND SHALL EXTEND A MIN. OF 50% THROUGH THE CURB OR CURB AND GUTTER.
4. THE ULTIMATE COMPRESSIVE STRENGTH OF THE CONCRETE SHALL BE AS SPECIFIED.
5. WEEP HOLES SHALL BE PLACED AT CONTRACTION JOINTS.
6. WEEP HOLES INSTALLED IN EXIST. CURB SHALL BE CORED ONLY, ON MIN. 12" CENTERS.
7. REFER TO STANDARD WHEELCHAIR RAMP DETAILS FOR INTERSECTION CURB RADII DETAILS.
8. THE USE OF EXTRUDED BONDED CURBS SHALL ONLY BE BY SPECIFIC APPROVAL OF THE ENGINEER.
9. EXTEND WEEPHOLES TO BACK OF WALK WHEN SIDEWALKS ARE CONSTRUCTED AND INSTALL COUPLINGS AT BACK OF WALK.
10. FOR CONCRETE STREETS, MATCH STREET AND CURB JOINTS.

CITY OF CORVALLIS
ENGINEERING DIVISION

CURB CONSTRUCTION STANDARD DETAIL

DATE: JANUARY, 2003	SCALE: NONE	STANDARD DETAIL No.
APPROVED:		103

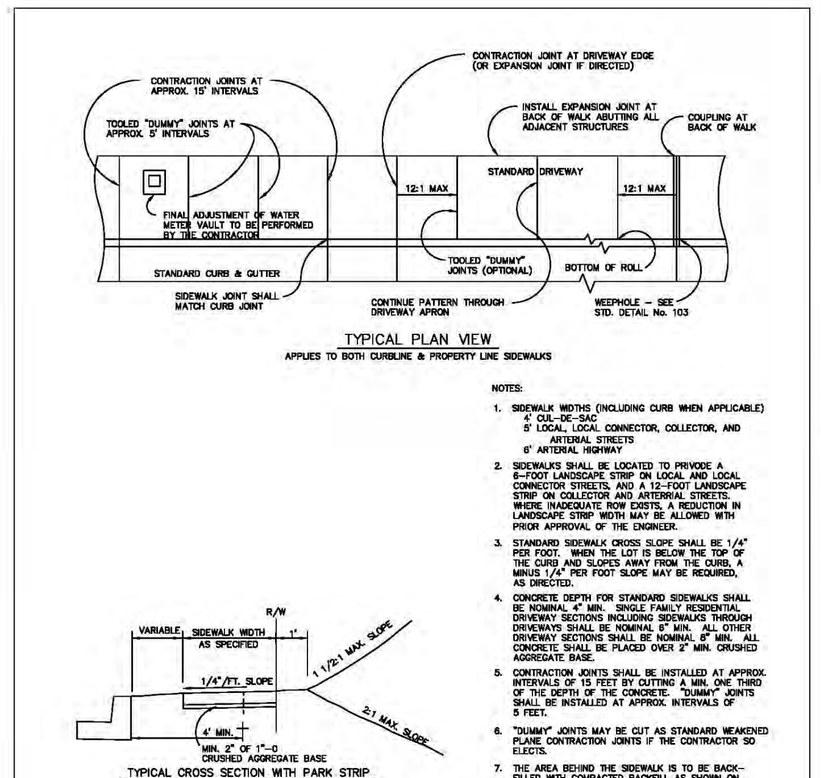

NOTES:

1. SIDEWALK WIDTHS (INCLUDING CURB WHEN APPLICABLE)
   4' CUL-DE-SAC
   5' LOCAL, LOCAL CONNECTOR, COLLECTOR, AND ARTERIAL STREETS
   6' ARTERIAL HIGHWAY
2. SIDEWALKS SHALL BE LOCATED TO PROVIDE A 6-FOOT LANDSCAPE STRIP ON LOCAL AND LOCAL CONNECTOR STREETS, AND A 12-FOOT LANDSCAPE STRIP ON COLLECTOR AND ARTERIAL STREETS, WHERE INADEQUATE ROW EXISTS, A REDUCTION IN LANDSCAPE STRIP WIDTH MAY BE ALLOWED WITH PRIOR APPROVAL OF THE ENGINEER.
3. STANDARD SIDEWALK CROSS SLOPE SHALL BE 1/4" PER FOOT. WHEN THE LOT IS BELOW THE TOP OF THE CURB AND SLOPES AWAY FROM THE CURB, A MINUS 1/4" PER FOOT SLOPE MAY BE REQUIRED, AS DIRECTED.
4. CONCRETE DEPTH FOR STANDARD SIDEWALKS SHALL BE NOMINAL 4" MIN. SINGLE FAMILY RESIDENTIAL DRIVEWAY SECTIONS INCLUDING SIDEWALKS THROUGH DRIVEWAYS SHALL BE NOMINAL 6" MIN. ALL OTHER DRIVEWAY SECTIONS SHALL BE NOMINAL 8" MIN. ALL CONCRETE SHALL BE PLACED OVER 2" MIN. CRUSHED AGGREGATE BASE.
5. CONTRACTION JOINTS SHALL BE INSTALLED AT APPROX. INTERVALS OF 15 FEET BY CUTTING A MIN. ONE THIRD OF THE DEPTH OF THE CONCRETE. "DUMMY" JOINTS SHALL BE INSTALLED AT APPROX. INTERVALS OF 5 FEET.
6. "DUMMY" JOINTS MAY BE CUT AS STANDARD WEAKENED PLANE CONTRACTION JOINTS IF THE CONTRACTOR SO ELECTS.
7. THE AREA BEHIND THE SIDEWALK IS TO BE BACK-FILLED WITH COMPACTED BACKFILL AS SHOWN ON THE PLAN AND AS DIRECTED. THE BACKFILL SHALL APPLY TO BOTH SIDES OF THE SIDEWALK ON A PROPERTY LINE SIDEWALK.

CITY OF CORVALLIS
ENGINEERING DIVISION

STANDARD SIDEWALK DETAIL

DATE: JULY, 2005	SCALE: NONE	STANDARD DETAIL No.
APPROVED:		106

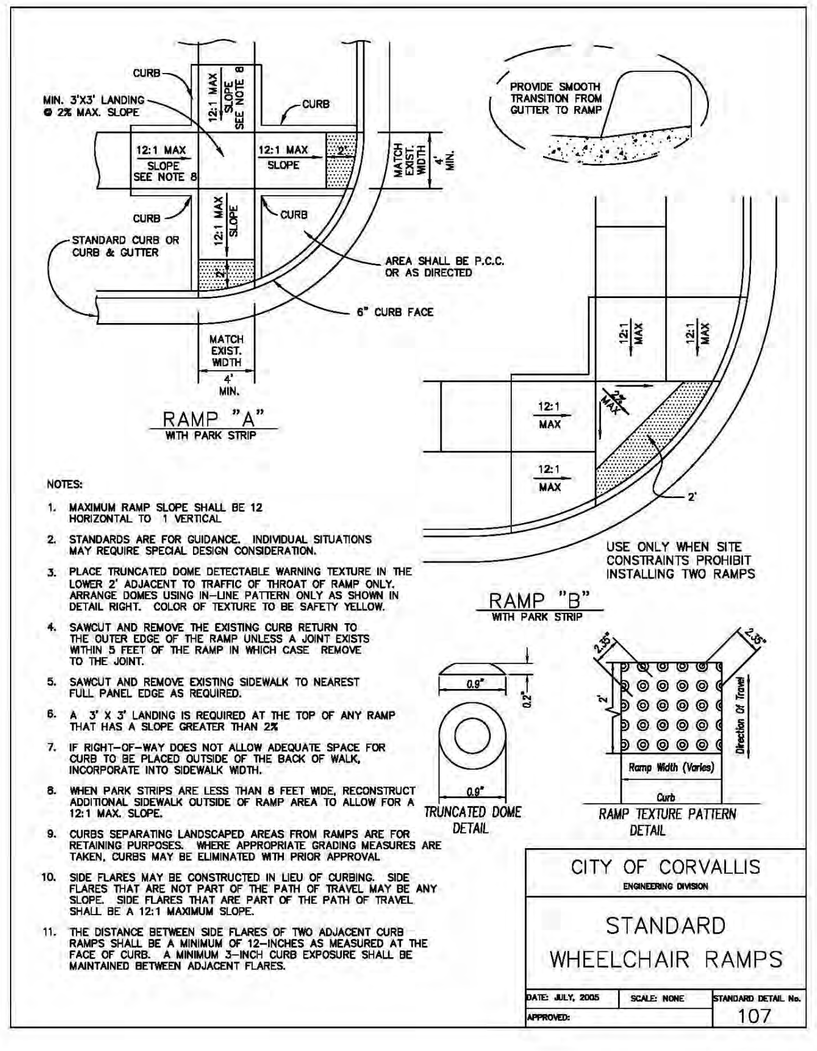

NOTES:

1. MAXIMUM RAMP SLOPE SHALL BE 12 HORIZONTAL TO 1 VERTICAL.
2. STANDARDS ARE FOR GUIDANCE. INDIVIDUAL SITUATIONS MAY REQUIRE SPECIAL DESIGN CONSIDERATION.
3. PLACE TRUNCATED DOME DETECTABLE WARNING TEXTURE IN THE LOWER 2' ADJACENT TO TRAFFIC OF THROAT OF RAMP ONLY. ARRANGE DOMES USING IN-LINE PATTERN ONLY AS SHOWN IN DETAIL RIGHT. COLOR OF TEXTURE TO BE SAFETY YELLOW.
4. SAWCUT AND REMOVE THE EXISTING CURB RETURN TO THE OUTER EDGE OF THE RAMP UNLESS A JOINT EXISTS WITHIN 3 FEET OF THE RAMP IN WHICH CASE REMOVE TO THE JOINT.
5. SAWCUT AND REMOVE EXISTING SIDEWALK TO NEAREST FULL PANEL EDGE AS REQUIRED.
6. A 3' X 3' LANDING IS REQUIRED AT THE TOP OF ANY RAMP THAT HAS A SLOPE GREATER THAN 2%
7. IF RIGHT-OF-WAY DOES NOT ALLOW ADEQUATE SPACE FOR CURB TO BE PLACED OUTSIDE OF THE BACK OF WALK, INCORPORATE INTO SIDEWALK WIDTH.
8. WHEN PARK STRIPS ARE LESS THAN 8 FEET WIDE, RECONSTRUCT ADDITIONAL SIDEWALK OUTSIDE OF RAMP AREA TO ALLOW FOR A 12:1 MAX. SLOPE.
9. CURBS SEPARATING LANDSCAPED AREAS FROM RAMPS ARE FOR RETAINING PURPOSES. WHERE APPROPRIATE GRADING MEASURES ARE TAKEN, CURBS MAY BE ELIMINATED WITH PRIOR APPROVAL
10. SIDE FLARES MAY BE CONSTRUCTED IN LIEU OF CURBING. SIDE FLARES THAT ARE NOT PART OF THE PATH OF TRAVEL MAY BE ANY SLOPE. SIDE FLARES THAT ARE PART OF THE PATH OF TRAVEL SHALL BE A 12:1 MAXIMUM SLOPE.
11. THE DISTANCE BETWEEN SIDE FLARES OF TWO ADJACENT CURB RAMPS SHALL BE A MINIMUM OF 12-INCHES AS MEASURED AT THE FACE OF CURB. A MINIMUM 3-INCH CURB EXPOSURE SHALL BE MAINTAINED BETWEEN ADJACENT FLARES.

CITY OF CORVALLIS
ENGINEERING DIVISION

STANDARD WHEELCHAIR RAMPS

DATE: JULY, 2005	SCALE: NONE	STANDARD DETAIL No.
APPROVED:		107

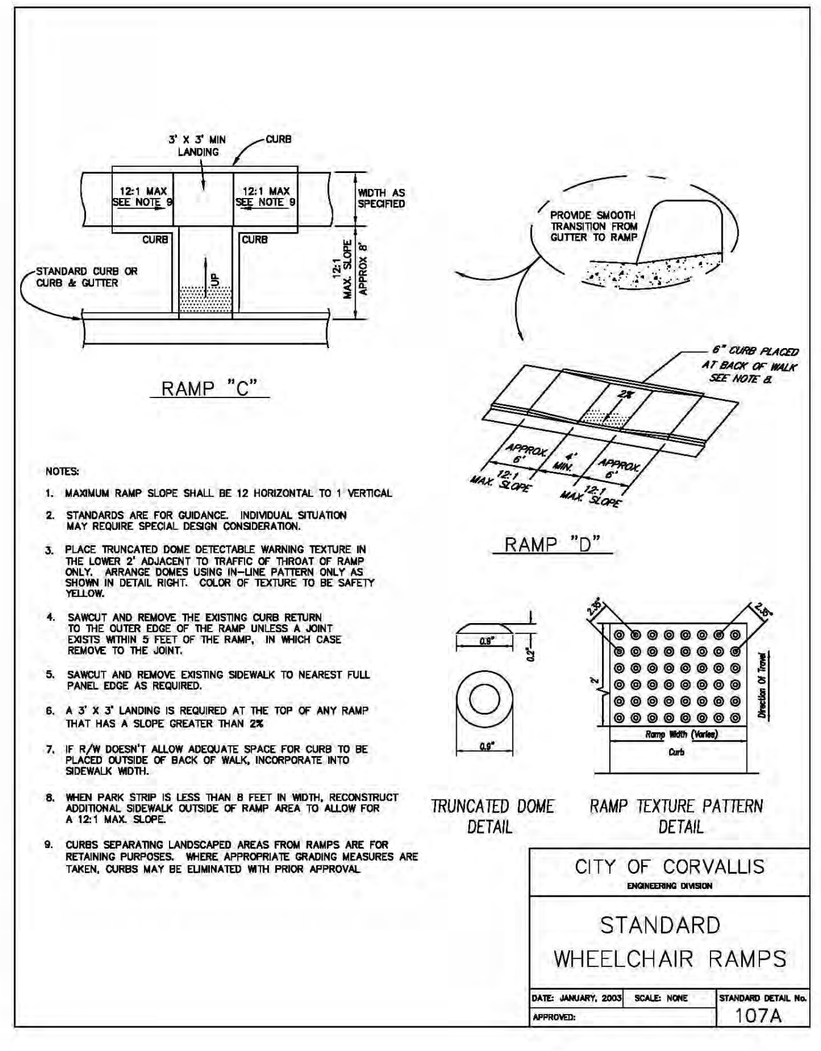

NOTES:

1. MAXIMUM RAMP SLOPE SHALL BE 12 HORIZONTAL TO 1 VERTICAL.
2. STANDARDS ARE FOR GUIDANCE. INDIVIDUAL SITUATION MAY REQUIRE SPECIAL DESIGN CONSIDERATION.
3. PLACE TRUNCATED DOME DETECTABLE WARNING TEXTURE IN THE LOWER 2' ADJACENT TO TRAFFIC OF THROAT OF RAMP ONLY. ARRANGE DOMES USING IN-LINE PATTERN ONLY AS SHOWN IN DETAIL RIGHT. COLOR OF TEXTURE TO BE SAFETY YELLOW.
4. SAWCUT AND REMOVE THE EXISTING CURB RETURN TO THE OUTER EDGE OF THE RAMP UNLESS A JOINT EXISTS WITHIN 5 FEET OF THE RAMP, IN WHICH CASE REMOVE TO THE JOINT.
5. SAWCUT AND REMOVE EXISTING SIDEWALK TO NEAREST FULL PANEL EDGE AS REQUIRED.
6. A 3' X 3' LANDING IS REQUIRED AT THE TOP OF ANY RAMP THAT HAS A SLOPE GREATER THAN 2%
7. IF R/W DOESN'T ALLOW ADEQUATE SPACE FOR CURB TO BE PLACED OUTSIDE OF BACK OF WALK, INCORPORATE INTO SIDEWALK WIDTH.
8. WHEN PARK STRIP IS LESS THAN 8 FEET IN WIDTH, RECONSTRUCT ADDITIONAL SIDEWALK OUTSIDE OF RAMP AREA TO ALLOW FOR A 12:1 MAX. SLOPE.
9. CURBS SEPARATING LANDSCAPED AREAS FROM RAMPS ARE FOR RETAINING PURPOSES. WHERE APPROPRIATE GRADING MEASURES ARE TAKEN, CURBS MAY BE ELIMINATED WITH PRIOR APPROVAL

CITY OF CORVALLIS
ENGINEERING DIVISION

STANDARD WHEELCHAIR RAMPS

DATE: JANUARY, 2003	SCALE: NONE	STANDARD DETAIL No.
APPROVED:		107A

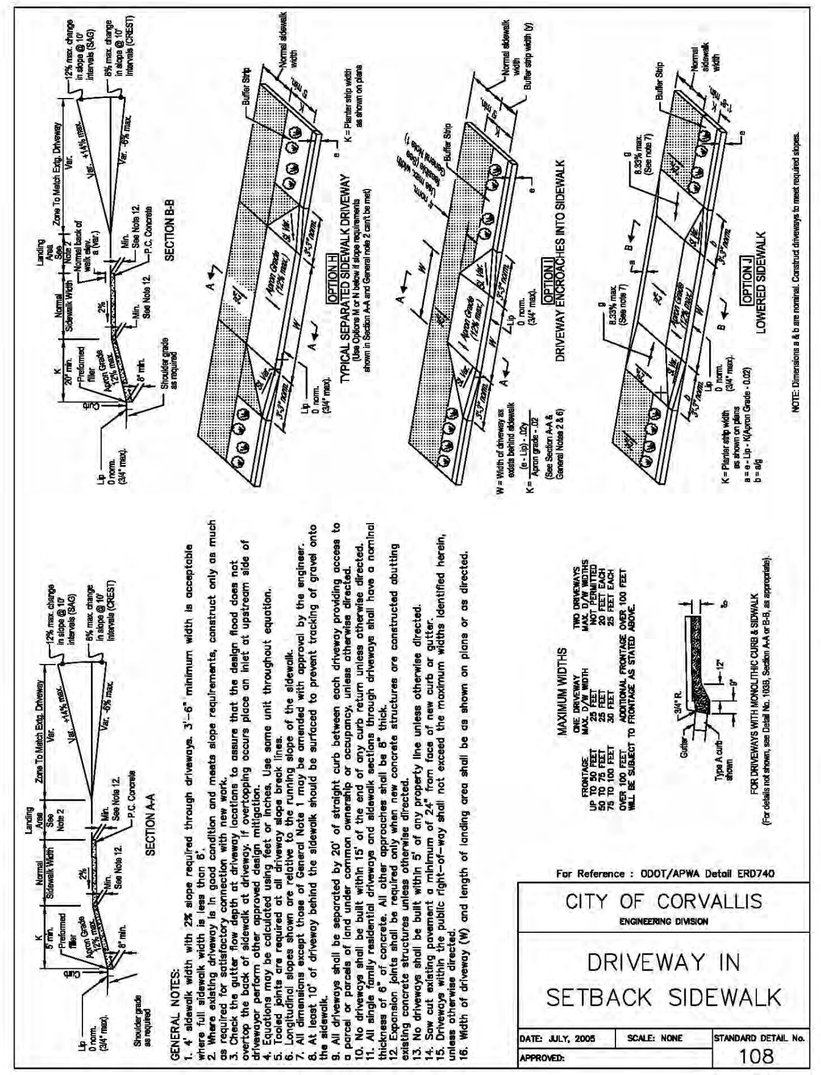

GENERAL NOTES:
1. 4" sidewalk width with 2% slope required through driveways. 3'-6" minimum width is acceptable where existing sidewalk is in good condition and meets slope requirements, construct only as much as needed to match existing.
2. Where existing driveway is in good condition and meets slope requirements, construct only as much as needed to match existing.
3. Check the gutter flow depth at driveway locations to assure that the design flood does not encroach onto the driveway. Where the flow depth exceeds 2" in the gutter, modify the profile of the driveway or perform other approved design mitigation.
4. Expansion joints are required at all driveway edges and at sidewalk connections.
5. Tooled joints are required at all driveway edges and at sidewalk connections.
6. All dimensions except those of General Note 1 may be amended with approval by the engineer.
7. All dimensions except those of General Note 1 may be amended with approval by the engineer.
8. Sidewalk through driveway shall be constructed to the same specifications as the adjacent sidewalk.
9. Sidewalk through driveway shall be surfaced to prevent tracking of gravel onto the sidewalk.
10. No driveway shall be built within 10' of the end of any curb return unless otherwise directed.
11. Do not place any utility boxes, poles, or other obstructions in the sidewalk area. Relocate utility boxes as required at the expense of the adjacent property owner.
12. Sidewalk through driveway shall be constructed to the same specifications as the adjacent sidewalk.
13. Do not place any utility boxes, poles, or other obstructions in the sidewalk area.
14. Saw cut existing pavement a minimum of 2'-0" from face of new curb or gutter.
15. Sidewalk shall be constructed within the right-of-way and not exceed the maximum widths identified herein, unless otherwise directed.
16. Width of driveway (W) and length of landing area shall be as shown on plans or as directed.

CITY OF CORVALLIS
ENGINEERING DIVISION

DRIVEWAY IN SETBACK SIDEWALK

DATE: JULY, 2005	SCALE: NONE	STANDARD DETAIL No.
APPROVED:		108

PIP14-1581

SR DESIGN
Engineering
8196 SW Hall Boulevard, Suite 101
Beaverton, Oregon 97008
phone (503) 469-1213
fax (503) 469-8553
www.srdlc.com
Planning

REGISTERED PROFESSIONAL ENGINEER
STEVEN C. ROPER
OREGON
SEPT. 14, 1987
EXPIRES 12-31-14

STREET DETAILS
WILLAMETTE LANDING PHASE 9

695 SE RIVERGREEN AVENUE
CORVALLIS, OREGON
LEGEND HOMES CORP., PORTLAND, OR 97223

REV.	DESCRIPTION	DATE
1	PER CITY COMMENT	

PROJECT NO. LEG001
CASE FILE NO. PLD13-00009 SUB13-00002

DATE 5/15/14
DESIGNED S ROPER
ENGINEER S ROPER
CHECKED
SHEET TITLE STREET DETAILS
SHEET NUMBER C101

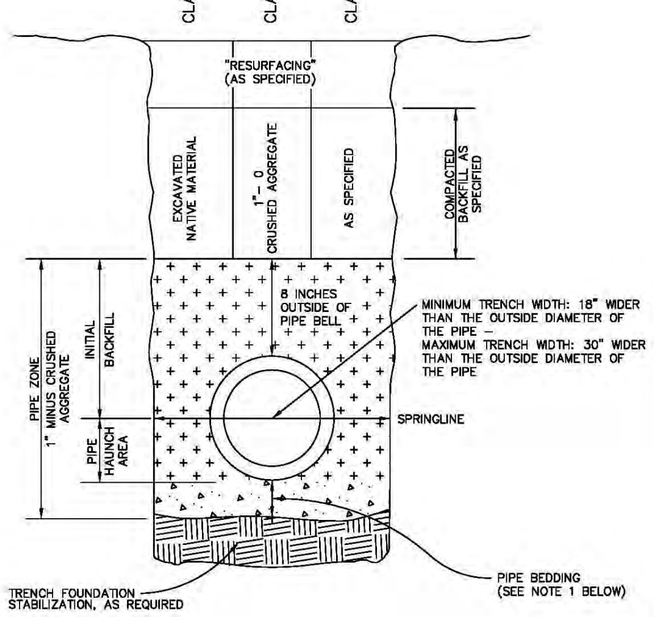

NOTES:

1) MINIMUM PIPE BEDDING SHALL BE AS FOLLOWS:
4" FOR PIPE 12" IN DIAMETER OR LESS
6" FOR PIPE 15" TO 36" IN DIAMETER
8" FOR PIPE 42" IN DIAMETER OR GREATER

CITY OF CORVALLIS
ENGINEERING DIVISION

TRENCH BACKFILL & PIPE ZONE DETAIL

DATE: JANUARY, 2003	SCALE: NONE	STANDARD DETAIL No.
APPROVED:		201

NOTES:

1) STANDARD PRECAST MANHOLE SECTIONS USE 48" MINIMUM FOR PIPE SIZES TO 30" MAXIMUM USE 60" MINIMUM FOR PIPE SIZES TO 42" MAXIMUM USE 72", 84", OR 102" WHEN SPECIFIED.
2) USE ECCENTRIC PRECAST CONE FOR ALL MANHOLES OVER FOUR FEET DEEP.
3) ALL MANHOLE RINGS & COVERS SHALL BE MFG. BY INLAND FOUNDRY – PATTERN NO. 105 (STANDARD FRAME) – PATTERN NO. 107 (SUBURBAN FRAME) – PATTERN NO. 101T (TAMPERPROOF) – OR PATTERN NO. 101W (WATERTIGHT) OR APPROVED EQUAL.
4) INSTALL "LANE INTERNATIONAL CORP. P-14850" STEPS 12" O.C. IN ALL MANHOLES OVER FOUR (4) FEET DEEP – IN COMPLIANCE WITH O.S.H.D. CFR 29-1910.27.
5) ALL SANITARY SEWER MANHOLE SECTION JOINTS SHALL BE SEALED AS PER SECTION III.4.D.02.4 OF THE STANDARDS.
6) MANHOLES WITHIN STREETS SHALL BE ADJUSTED TO FINAL PAVING GRADE BEFORE WEARING COURSE IS INSTALLED. CONCRETE COLLAR SHALL BE INSTALLED ON EVERY MANHOLE PER STANDARD DETAIL 205.
7) ALL RIGID PIPES CONNECTED TO THE MANHOLE SHALL HAVE JOINTS 1 1/2 DIAMETERS OF THE MANHOLE STRUCTURE.
8) CONE OR TOP MUST BE ROTATED SO AS TO NOT PLACE THE LID IN THE WHEEL PATH IN PAVED AREAS AS DIRECTED BY THE ENGINEER.
9) MANHOLES INSTALLED OUTSIDE OF PAVED AREAS SHALL BE IDENTIFIED WITH FIBERGLASS MARKING POST.

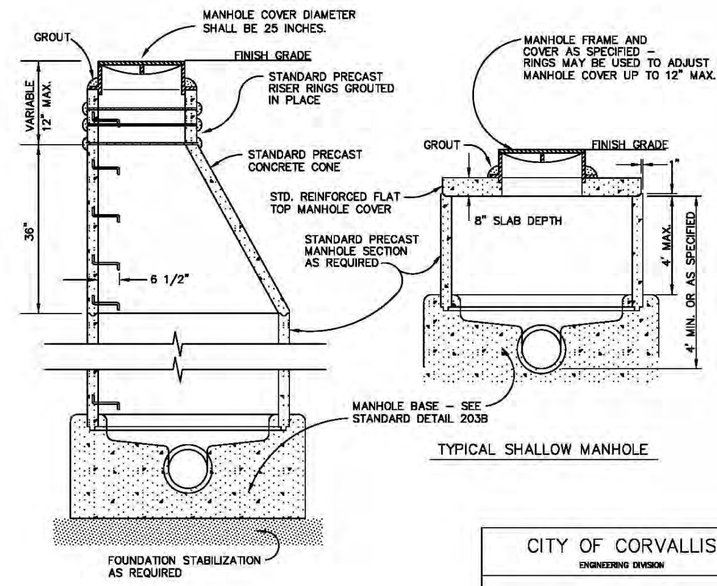

TYPICAL MANHOLE

TYPICAL SHALLOW MANHOLE

CITY OF CORVALLIS
ENGINEERING DIVISION

STANDARD MANHOLE

DATE: JULY, 2005	SCALE: NONE	STANDARD DETAIL No.
APPROVED:		203

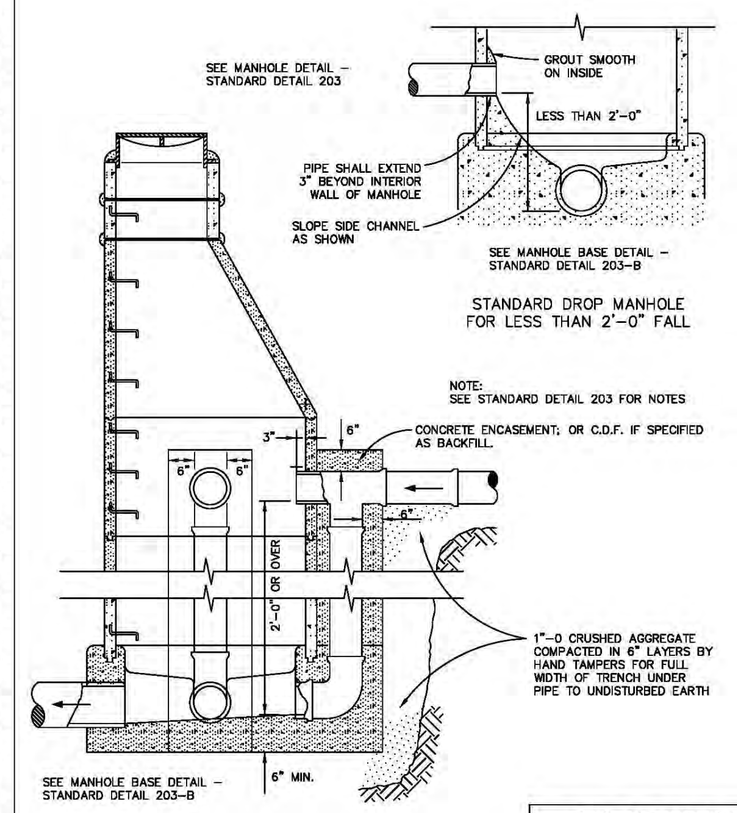

STANDARD DROP MANHOLE FOR LESS THAN 2'-0" FALL

NOTE:
SEE STANDARD DETAIL 203 FOR NOTES

STANDARD DROP MANHOLE FOR 2'-0" OR MORE FALL

CITY OF CORVALLIS
ENGINEERING DIVISION

STANDARD DROP MANHOLE DETAIL

DATE: JANUARY, 2003	SCALE: NONE	STANDARD DETAIL No.
APPROVED:		203A

1

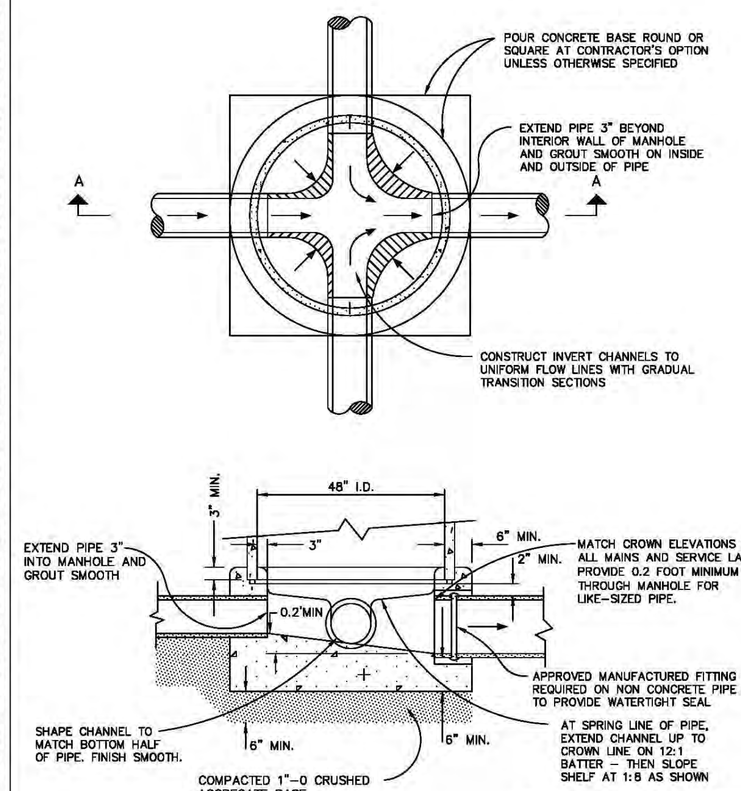

SECTION A–A

NOTES:

1) CONCRETE SHALL ATTAIN A MINIMUM ULTIMATE COMPRESSIVE STRENGTH OF 3000 P.S.I.
2) CHANNELS SHALL BE CONSTRUCTED TO PROVIDE SMOOTH SLOPES AND RADII TO OUTLET PIPE.
3) FALL THROUGH MANHOLE MAY BE REDUCED TO .1 FOOT WITH PRIOR APPROVAL BY THE ENGINEER.

CITY OF CORVALLIS
ENGINEERING DIVISION

MANHOLE BASE SECTION

DATE: JULY, 2005	SCALE: NONE	STANDARD DETAIL No.
APPROVED:		203B

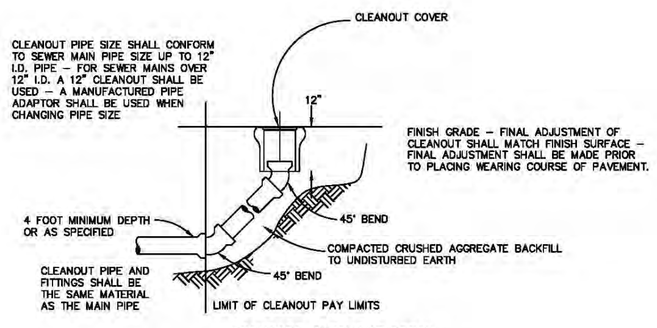

STANDARD CLEANOUT DETAIL
(FOR END OF SANITARY MAIN WITH FOUR OR LESS SERVICE CONNECTIONS)

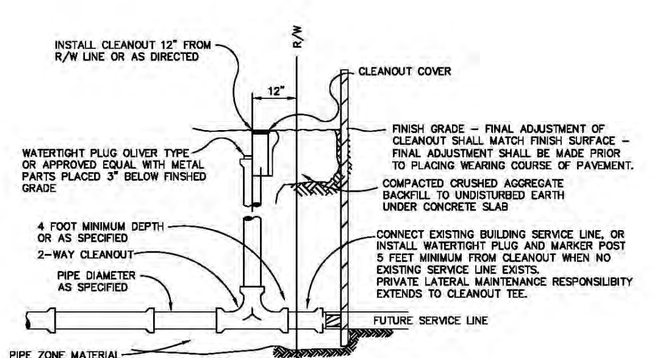

STANDARD SERVICE LATERAL CLEANOUT DETAIL

NOTES:

1) SEE DETAIL 206A FOR STANDARD MAIN PIPE CONNECTION DETAILS.
2) MARKER POSTS AND BLOCKING FOR END OF LINE SHALL BE A PRESSURE TREATED 2x4. POST SHALL EXTEND 12" ABOVE FINISH GRADE AND PAINTED WHITE.
3) CLEANOUTS OUTSIDE OF PAVED AREA SHALL BE IDENTIFIED WITH FIBERGLASS MARKER POST.
4) GLUE-ON OR SOLVENT WELDED PLUGS SHALL NOT BE PERMITTED.
5) MIN. DEPTH AT RIGHT-OF-WAY LINE SHALL BE 4 FT. OR AS SPECIFIED.

CITY OF CORVALLIS
ENGINEERING DIVISION

STANDARD CLEANOUT

DATE: JULY, 2005	SCALE: NONE	STANDARD DETAIL No.
APPROVED:		206

NOTES:
1) MINIMUM DEPTH AT EASEMENT LINE SHALL BE 4 FEET OR AS SPECIFIED.
2) MARKER POSTS AND BLOCKING SHALL BE A PRESSURE TREATED 2x4 – POST SHALL EXTEND 12" ABOVE FINISH GRADE AND EXPOSED AREA SHALL BE PAINTED WHITE
3) GLUE ON OR SOLVENT WELDED PLUGS SHALL NOT BE PERMITTED

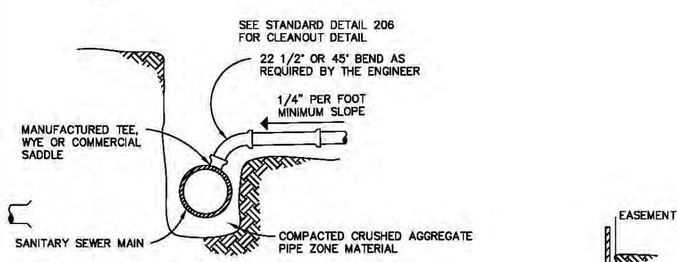

SHALLOW TRENCH SERVICE CONNECTION

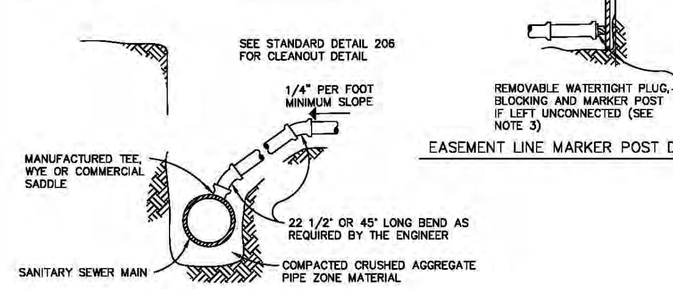

DEEP TRENCH SERVICE CONNECTION

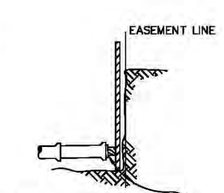

EASEMENT LINE MARKER POST DETAIL

NOTE: WHERE TEE OR WYE IS LOCATED IN STREET RIGHT-OF-WAY EXTEND SERVICE CONNECTION TO RIGHT-OF-WAY LINE AND INSTALL CLEANOUT AS PER STANDARD DETAIL 206

TYPICAL TAP-IN HUB TEE DETAIL

CITY OF CORVALLIS
ENGINEERING DIVISION

STANDARD PIPING DETAILS

DATE: JANUARY, 2003	SCALE: NONE	STANDARD DETAIL No.
APPROVED:		206A

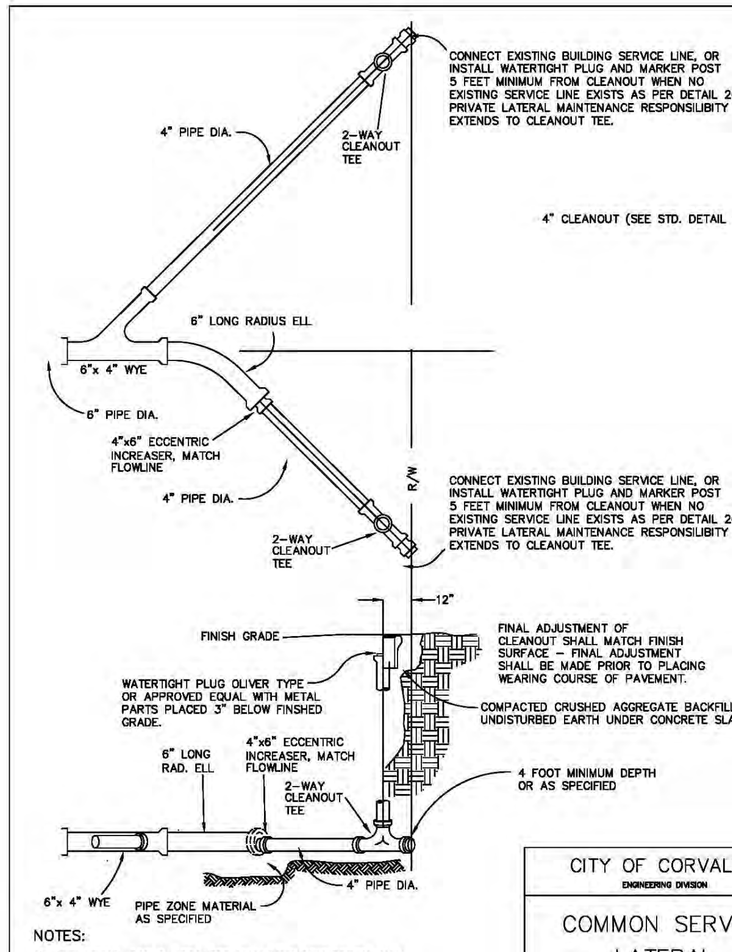

NOTES:

1) SEE DETAIL 206 & 206A FOR MAIN LINE CONNECTION AND MARKER POST DETAILS.

CITY OF CORVALLIS
ENGINEERING DIVISION

COMMON SERVICE LATERAL

DATE: JULY, 2005	SCALE: NONE	STANDARD DETAIL No.
APPROVED:		206B

NOTE:

1. Concrete shall attain a strength of 3300 psi in 20 days.
2. Top shall be reinforced with 4"x4"- 6"x6" wire mesh.
3. All metal parts shall be hot dipped galv. after fabrication.
4. If cast in place, walls and base shall pe poured monolithically.
5. For detail of depressed gutter at curb inlet for wide gutter plate, see standard detail 103A.

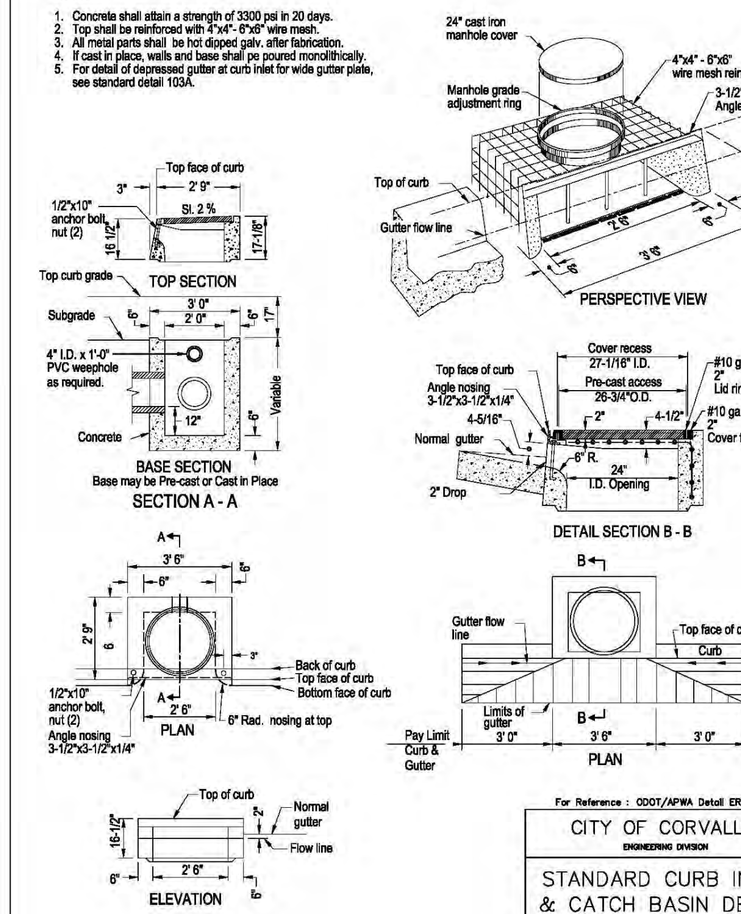

For Reference : ODOT/APWA Detail ERD372

CITY OF CORVALLIS
ENGINEERING DIVISION

STANDARD CURB INLET & CATCH BASIN DETAIL (CG-3)

DATE: JULY, 2005	SCALE: NONE	STANDARD DETAIL No.
APPROVED:		209

PIP14-1581

SFR DESIGN
Planning Engineering
8196 SW Hall Boulevard, Suite 101
Beaverton, Oregon 97008
phone (503) 469-1213
fax (503) 469-8553
www.srdllc.com

REGISTERED PROFESSIONAL ENGINEER
OREGON
STEVEN C. ROPER
SEPT. 14, 1987
EXPIRES 12-31-14

STORM DETAILS
WILLAMETTE LANDING PHASE 9
695 SE RIVERGREEN AVENUE
CORVALLIS, OREGON
LEGEND HOMES CORP., PORTLAND, OR 97223

REV.	DESCRIPTION	DATE
1	PER CITY COMMENT	6/30/14

PROJECT NO. LEG001
CASE FILE NO. PLD13-00009 SUB13-00002

DATE 5/15/14
DESIGNED S ROPER
ENGINEER S ROPER
CHECKED
SHEET TITLE STORM DETAILS
SHEET NUMBER C102

Enclosure

STREET, SANITARY AND WATER PROFILE
WILLAMETTE LANDING PHASE 9
695 SE RIVERGREEN AVENUE
CORVALLIS, OREGON
LEGEND HOMES CORP., PORTLAND, OR 97223

REV.	DESCRIPTION	DATE
1	PER CITY COMMENT	

PROJECT NO. LEG001
CASE FILE NO. PLD13-00009 SUB13-00002

DATE	5/15/14
DESIGNED	S ROPER
ENGINEER	S ROPER
CHECKED	
SHEET TITLE	STREET / SAN.
SHEET NUMBER	C200

PIP14-1581

REGISTERED PROFESSIONAL ENGINEER 61432 OREGON SEPT. 14 1999 STEVEN C. ROPER
EXPIRES 12-31-14

SR DESIGN LLC
8196 SW Hall Boulevard, Suite 101
Beaverton, Oregon 97008
phone (503) 469-1213
fax (503) 469-8553
www.srdllc.com
Planning | Engineering

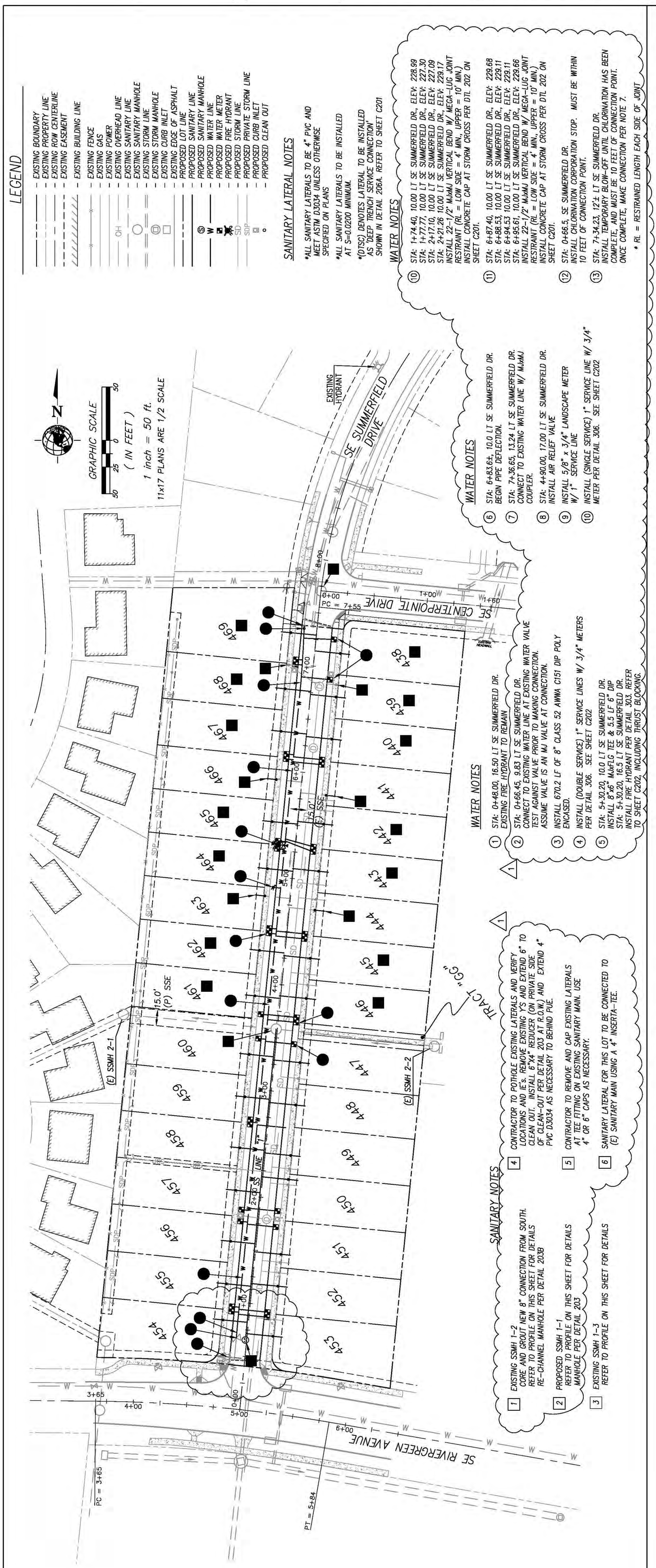

SANITARY SEWER LATERALS				CLEAN-OUT INFO.	
LOT#	SS STATION	LF	DEPTH (FT)	IE @ END	C/O RIM	C/O I.E.
438	3+56.12	32.9	5.3	229.1	233.97	228.83
439	3+15.14	33.1	5.5	229.1	233.99	228.79
440	2+75.53	33.2	5.8	229.3	234.18	228.89
441	(E) 2+22.58	33.4	6.0	229.5	234.42	228.98
442	1+95.53	33.5	6.0	229.7	234.55	229.09
443	1+51.14	33.6	6.0	229.8	234.75	229.12
444	(E) 1+14.51	33.8	6.0	229.8	234.66	229.08
445	0+69.14	33.9	6.0	229.7	234.43	228.96
446	0+31.36	34.1	6.0	229.5	234.24	228.77
447	0+29.07	34.2	6.0	229.1	233.94	228.48
448	0+69.07	34.2	3.6	230.3(DTSC)	233.74	230.12
449	1+16.57	34.2	3.6	230.1(DTSC)	233.51	229.92
450	1+39.07	34.2	3.6	230.0(DTSC)	233.39	229.82
451	2+09.57	34.2	3.8	229.7(DTSC)	233.33	229.52
452	2+39.57	34.2	4.0	229.6(DTSC)	233.45	229.42
453	2+86.72	34.2	4.5	229.4(DTSC)	233.66	229.22
454	2+76.07	31.8	5.4	228.8	233.60	228.18
455	2+42.07	31.8	5.4	228.6	233.46	228.04
456	2+02.07	31.8	5.4	228.5	233.30	227.88
457	1+54.07	31.8	5.6	228.5	233.32	227.69
458	1+14.07	31.8	6.0	228.7	233.52	227.53
459	0+66.07	31.8	6.0	229.0	233.76	227.34
460	0+26.07	31.8	6.0	229.1	233.96	227.18
461	0+28.92	31.9	6.0	229.4	234.23	227.20
462	0+71.70	32.1	6.0	229.6	234.45	227.38
463	(E) 1+22.98	32.3	6.0	229.9	234.70	227.60
464	1+48.64	32.4	6.0	229.9	234.76	227.71
465	1+93.03	32.5	6.0	229.7	234.56	227.90
466	(E) 2+32.57	32.7	6.0	229.5	234.37	228.07
467	2+77.92	32.8	5.8	229.3	234.16	228.26
468	3+17.96	33.0	5.5	229.1	233.97	228.43
469	3+70.99	33.2	5.4	229.2	234.03	228.66

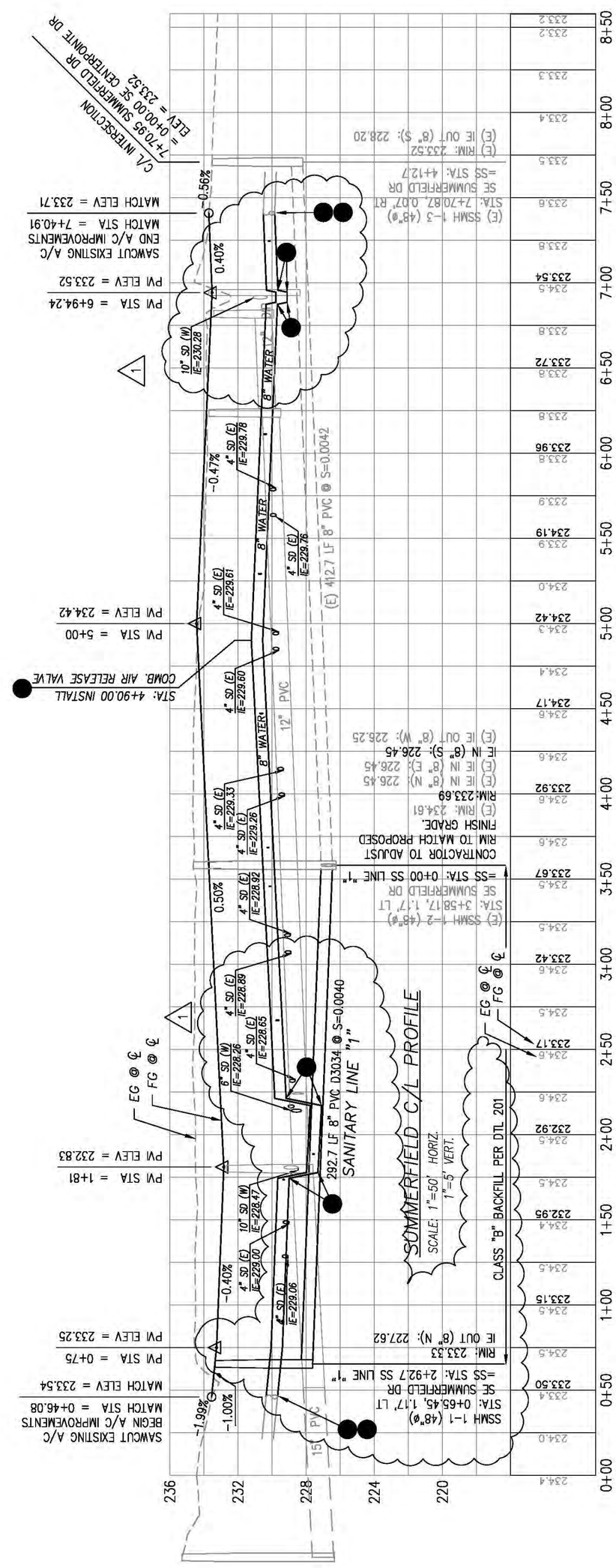

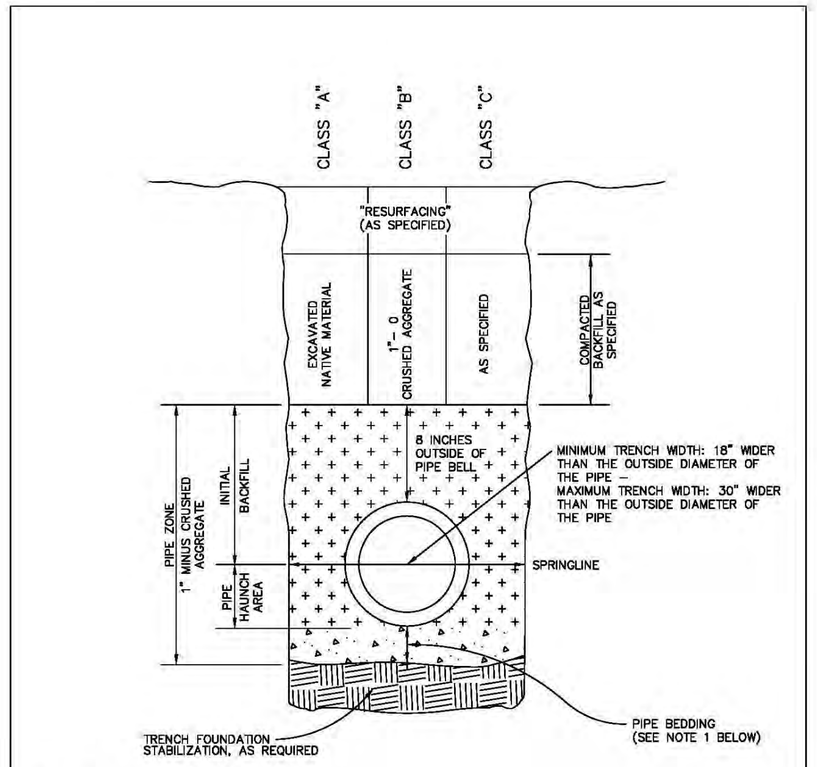

NOTES:

1) MINIMUM PIPE BEDDING SHALL BE AS FOLLOWS:
   4" FOR PIPE 12" IN DIAMETER OR LESS
   6" FOR PIPE 15" TO 36" IN DIAMETER
   8" FOR PIPE 42" IN DIAMETER OR GREATER

CITY OF CORVALLIS
ENGINEERING DIVISION

TRENCH BACKFILL & PIPE ZONE DETAIL

DATE: JANUARY, 2003	SCALE: NONE	STANDARD DETAIL No.
APPROVED:		201

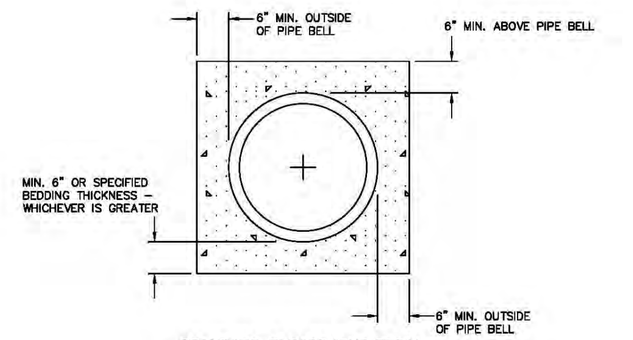

STANDARD ENCASEMENT DETAIL

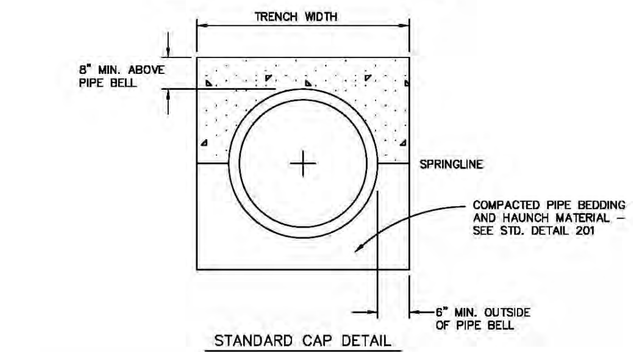

STANDARD CAP DETAIL

NOTES:
1) THE CONCRETE SHALL ATTAIN A 28 DAY MINIMUM ULTIMATE COMPRESSIVE STRENGTH OF 3000 P.S.I.
2) CAP ALL LOWER LINES AT UTILITY CROSSINGS WHEN LESS THAN 12" OF CLEARANCE EXISTS.
3) INSTALL ISOLATION MATERIAL AROUND PIPE BEFORE PLACING CONCRETE.

CITY OF CORVALLIS
ENGINEERING DIVISION

CONCRETE CAP & ENCASEMENT DETAILS

DATE: JANUARY, 2003	SCALE: NONE	STANDARD DETAIL No.
APPROVED:		202

NOTES:
1) STANDARD PRECAST MANHOLE SECTIONS USE 48" MINIMUM FOR PIPE SIZES TO 30" MAXIMUM USE 60" MINIMUM FOR PIPE SIZES TO 42" MAXIMUM USE 72", 84", OR 102" WHEN SPECIFIED.
2) USE ECCENTRIC PRECAST CONE FOR ALL MANHOLES OVER FOUR FEET DEEP.
3) ALL MANHOLE RINGS & COVERS SHALL BE MFG. BY INLAND FOUNDRY – PATTERN NO. 105 (STANDARD FRAME) – PATTERN NO. 107 (SUBURBAN FRAME) – PATTERN NO. 101T (TAMPERPROOF) – OR PATTERN NO. 101W (WATERTIGHT) OR APPROVED EQUAL.
4) INSTALL "LANE INTERNATIONAL CORP. P-14850" STEPS 12" O.C. IN ALL MANHOLES OVER FOUR (4) FEET DEEP – IN COMPLIANCE WITH O.S.H.D. CFR 29-1910.27.
5) ALL SANITARY SEWER MANHOLE SECTION JOINTS SHALL BE SEALED AS PER SECTION III.4.D.02.4 OF THE STANDARDS.
6) MANHOLES WITHIN STREETS SHALL BE ADJUSTED TO FINAL PAVING GRADE BEFORE WEARING COURSE IS INSTALLED. CONCRETE COLLAR SHALL BE INSTALLED ON EVERY MANHOLE PER STANDARD DETAIL 205.
7) ALL RIGID PIPES CONNECTED TO THE MANHOLE SHALL HAVE JOINTS 1 1/2 DIAMETERS OF THE MANHOLE STRUCTURE.
8) CONE OR TOP MUST BE ROTATED SO AS TO NOT PLACE THE LID IN THE WHEEL PATH IN PAVED AREAS AS DIRECTED BY THE ENGINEER.
9) MANHOLES INSTALLED OUTSIDE OF PAVED AREAS SHALL BE IDENTIFIED WITH FIBERGLASS MARKING POST.

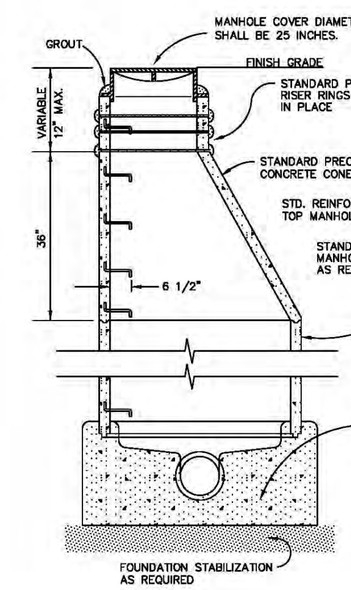

TYPICAL MANHOLE

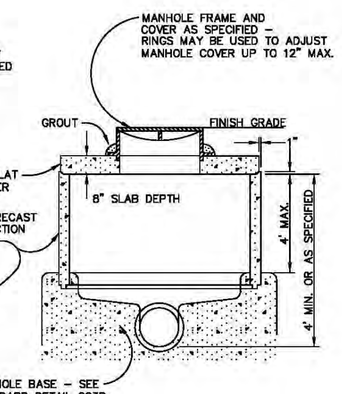

TYPICAL SHALLOW MANHOLE

CITY OF CORVALLIS
ENGINEERING DIVISION

STANDARD MANHOLE

DATE: JULY, 2005	SCALE: NONE	STANDARD DETAIL No.
APPROVED:		203

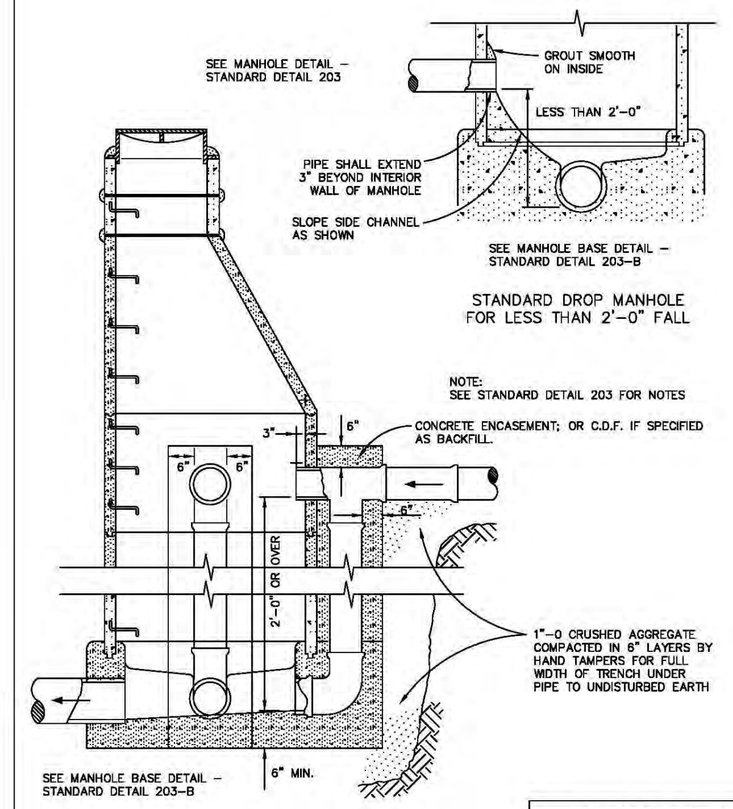

CITY OF CORVALLIS
ENGINEERING DIVISION

STANDARD DROP MANHOLE DETAIL

DATE: JANUARY, 2003	SCALE: NONE	STANDARD DETAIL No.
APPROVED:		203A

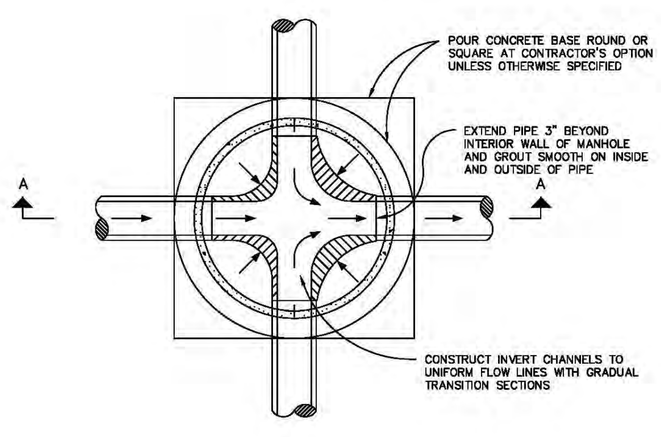

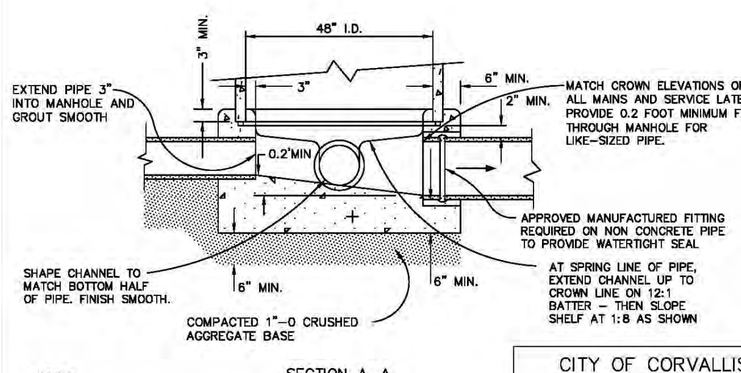

SECTION A–A

NOTES:
1) CONCRETE SHALL ATTAIN A MINIMUM ULTIMATE COMPRESSIVE STRENGTH OF 3000 P.S.I.
2) CHANNELS SHALL BE CONSTRUCTED TO PROVIDE SMOOTH SLOPES AND RADII TO OUTLET PIPE.
3) FALL THROUGH MANHOLE MAY BE REDUCED TO .1 FOOT WITH PRIOR APPROVAL BY THE ENGINEER.

CITY OF CORVALLIS
ENGINEERING DIVISION

MANHOLE BASE SECTION

DATE: JULY, 2005	SCALE: NONE	STANDARD DETAIL No.
APPROVED:		203B

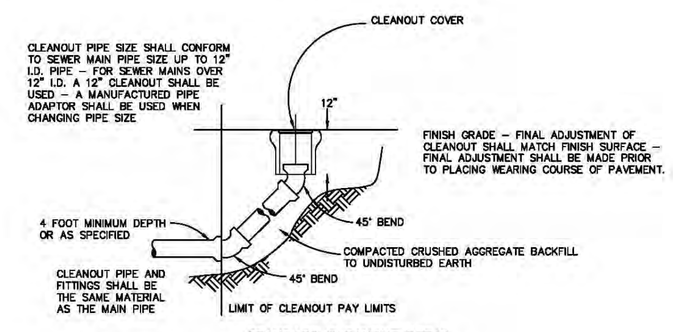

STANDARD CLEANOUT DETAIL
(FOR END OF SANITARY MAIN WITH FOUR OR LESS SERVICE CONNECTIONS)

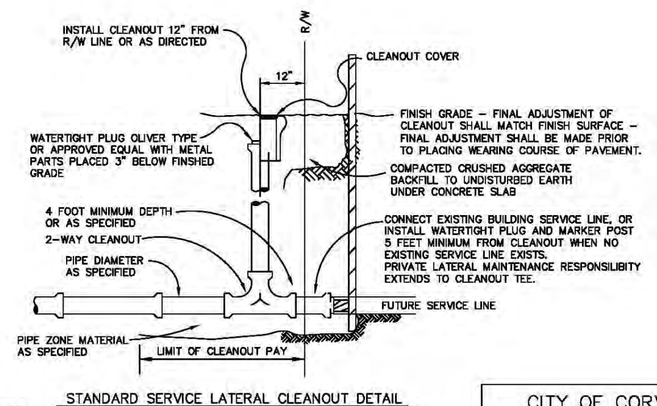

STANDARD SERVICE LATERAL CLEANOUT DETAIL

NOTES:
1) SEE DETAIL 206A FOR STANDARD MAIN PIPE CONNECTION DETAILS.
2) MARKER POSTS AND BLOCKING FOR END OF LINE SHALL BE A PRESSURE TREATED 2x4. POST SHALL EXTEND 12" ABOVE FINISH GRADE AND PAINTED WHITE.
3) CLEANOUTS OUTSIDE OF PAVED AREA SHALL BE IDENTIFIED WITH FIBERGLASS MARKER POST.
4) GLUE-ON OR SOLVENT WELDED PLUGS SHALL NOT BE PERMITTED.
5) MIN. DEPTH AT RIGHT-OF-WAY LINE SHALL BE 4 FT. OR AS SPECIFIED.

CITY OF CORVALLIS
ENGINEERING DIVISION

STANDARD CLEANOUT

DATE: JULY, 2005	SCALE: NONE	STANDARD DETAIL No.
APPROVED:		206

NOTES: 1) MINIMUM DEPTH AT EASEMENT LINE SHALL BE 4 FEET OR AS SPECIFIED.
2) MARKER POSTS AND BLOCKING SHALL BE A PRESSURE TREATED 2x4 – POST SHALL EXTEND 12" ABOVE FINISH GRADE AND EXPOSED AREA SHALL BE PAINTED WHITE
3) GLUE ON OR SOLVENT WELDED PLUGS SHALL NOT BE PERMITTED

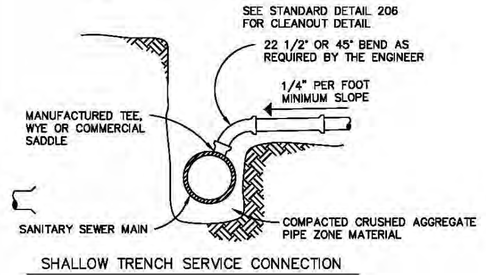

SHALLOW TRENCH SERVICE CONNECTION

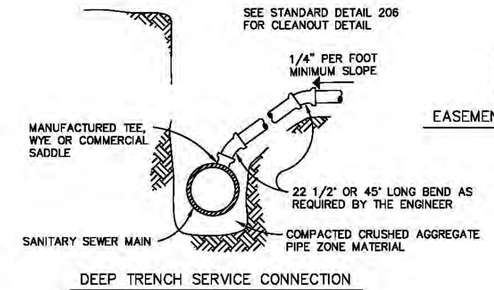

DEEP TRENCH SERVICE CONNECTION

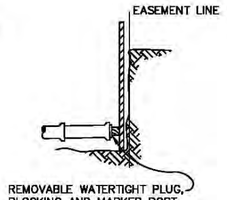

EASEMENT LINE MARKER POST DETAIL

NOTE: WHERE TEE OR WYE IS LOCATED IN STREET RIGHT-OF-WAY EXTEND SERVICE CONNECTION TO RIGHT-OF-WAY LINE AND INSTALL CLEANOUT AS PER STANDARD DETAIL 206

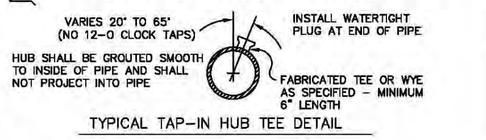

TYPICAL TAP-IN HUB TEE DETAIL

CITY OF CORVALLIS
ENGINEERING DIVISION

STANDARD PIPING DETAILS

DATE: JANUARY, 2003	SCALE: NONE	STANDARD DETAIL No.
APPROVED:		206A

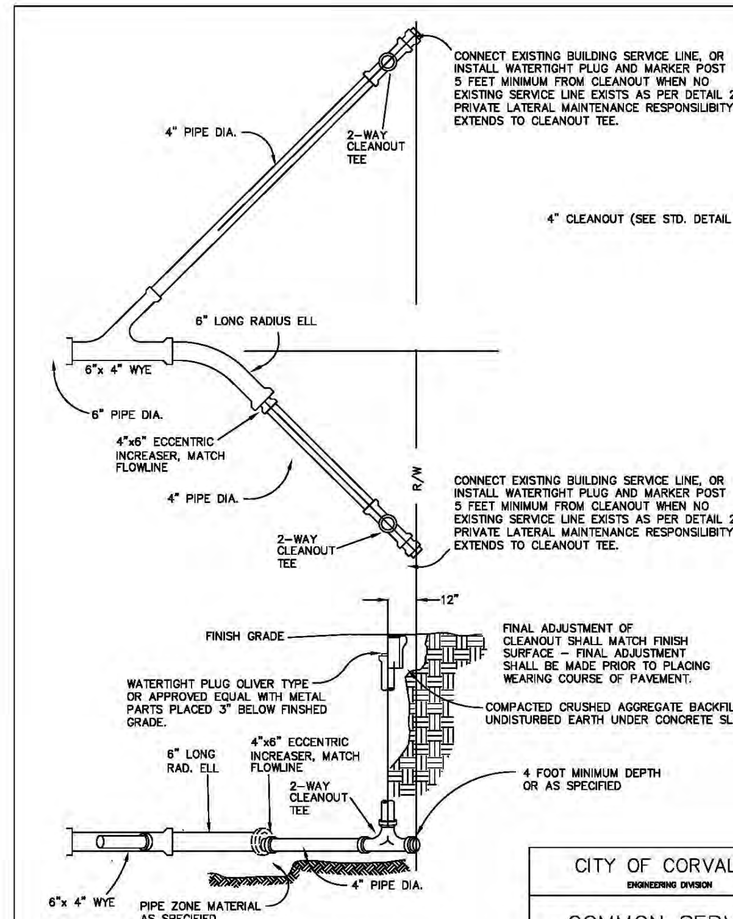

NOTES:
1) SEE DETAIL 206 & 208A FOR MAIN LINE CONNECTION AND MARKER POST DETAILS.

CITY OF CORVALLIS
ENGINEERING DIVISION

COMMON SERVICE LATERAL

DATE: JULY, 2005	SCALE: NONE	STANDARD DETAIL No.
APPROVED:		206B

PIP14-1581

SFR DESIGN
Engineering
Planning
8195 SW Hall Boulevard, Suite 101
Beaverton, Oregon 97008
phone (503) 469-1213
fax (503) 469-8553
www.srdllc.com

REGISTERED PROFESSIONAL ENGINEER
OREGON
STEVEN C. ROPER
SEPT. 14, 1982
EXPIRES 12-31-14

SANITARY DETAILS
WILLAMETTE LANDING PHASE 9
695 SE RIVERGREEN AVENUE
CORVALLIS, OREGON
LEGEND HOMES CORP., PORTLAND, OR 97223

REV.	DESCRIPTION	DATE
1	PER CITY COMMENT	DATE

PROJECT NO. LEG001
CASE FILE NO. PLD13-00009 SUB13-00002

DATE 5/15/14
DESIGNED S ROPER
ENGINEER S ROPER
CHECKED
SHEET TITLE SANITARY DETAILS
SHEET NUMBER C201

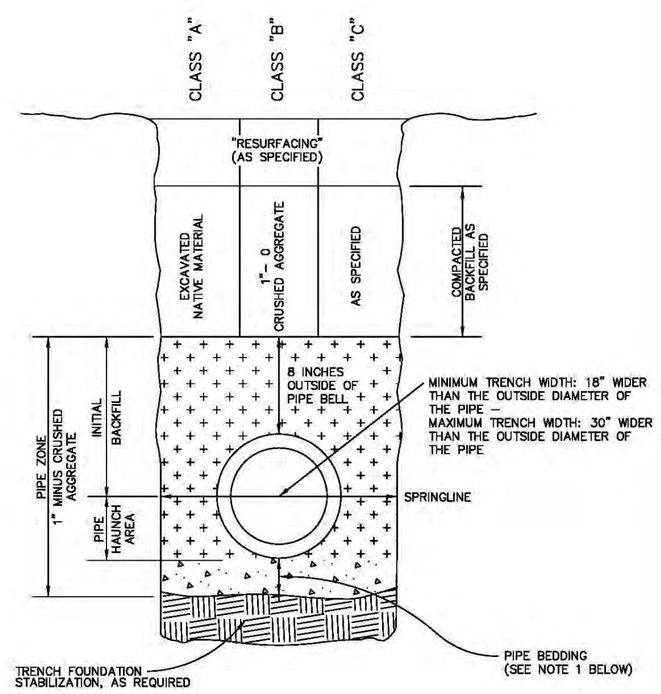

1) MINIMUM PIPE BEDDING SHALL BE AS FOLLOWS:
4" FOR PIPE 12" IN DIAMETER OR LESS
6" FOR PIPE 15" TO 36" IN DIAMETER
8" FOR PIPE 42" IN DIAMETER OR GREATER

CITY OF CORVALLIS
ENGINEERING DIVISION

TRENCH BACKFILL & PIPE ZONE DETAIL

DATE: JANUARY, 2003	SCALE: NONE	STANDARD DETAIL No.
APPROVED:		201

(HORIZONTAL)
BEARING AREA OF THRUST BLOCKS IN SQ. FT.

FITTING SIZE	TEE, WYE AND HYDRANT	STRADDLE BLOCK	90° BEND PLUGGED CROSS, TEE PLUGGED ON RUN	45° BEND	22 1/2° BEND	11 1/4° BEND
4	1.3	1.8	1.8	1.0		
6	2.8	3.7	4.0	2.2	1.1	
8	5.0	6.5	7.1	3.8	2.0	1.0
10	7.8	10.2	11.1	6.0	3.1	1.5
12	11.3	14.7	16.0	8.7	4.4	2.2
16	20.1	26.1	28.4	15.4	7.8	3.9
20	31.1	40.6	44.4	24.0	12.3	6.2
24	45.2	58.8	64.0	34.8	17.7	8.9

VOLUME OF THRUST BLOCK IN CU. YDS. (VERTICAL)

FITTING SIZE	BEND ANGLE 45°	22.5°	11.25°
4	1.1	0.4	0.2
6	2.7	1.0	0.4
8	4.9	1.8	0.8
10	6.0	2.3	0.9
12	8.5	3.2	1.3
14	11.9	4.3	1.8
16	14.8	5.6	2.3

VALUES BASED ON 200 PSI WATER PRESSURE AND 2000 PSF SOIL BEARING CAPACITY.

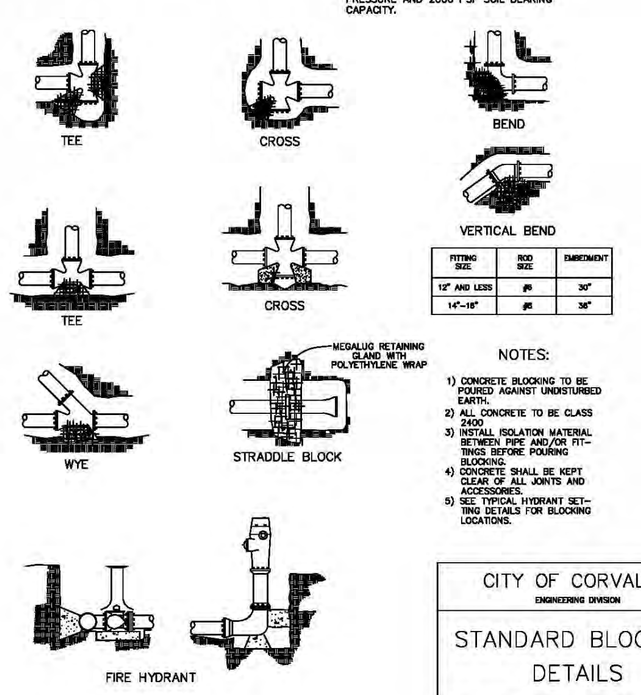

FITTING SIZE	ROD SIZE	EMBEDMENT
12" AND LESS	#6	30"
14"–16"	#8	36"

NOTES:
1) CONCRETE BLOCKING TO BE POURED AGAINST UNDISTURBED EARTH.
2) ALL CONCRETE TO BE CLASS 2400
3) INSTALL ISOLATION MATERIAL BETWEEN PIPE AND/OR FITTINGS AND BEFORE POURING BLOCKING.
4) CONCRETE SHALL BE KEPT CLEAR OF ALL JOINTS AND ACCESSORIES.
5) SEE TYPICAL HYDRANT SETTING DETAILS FOR BLOCKING LOCATIONS.

CITY OF CORVALLIS
ENGINEERING DIVISION

STANDARD BLOCKING DETAILS

DATE: JANUARY, 2003	SCALE: NONE	STANDARD DETAIL No.
APPROVED:		301

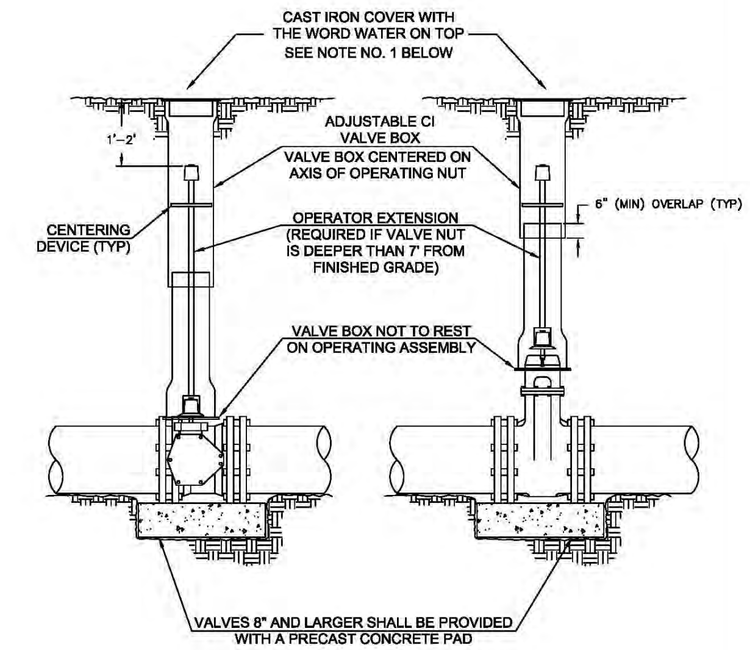

NOTES:
1. PICK HOLES IN LID SHALL HAVE A (MIN) 1/4" LIP FOR LIFTING.
2. VALVE BOX SHALL BE RICH "MEDFORD" 931 OR TYLER/UNION 7016-7026.

CITY OF CORVALLIS
ENGINEERING DIVISION

VALVE AND BOX SETTING

DATE: JANUARY, 2003	SCALE: NONE	STANDARD DETAIL No.
APPROVED:		302

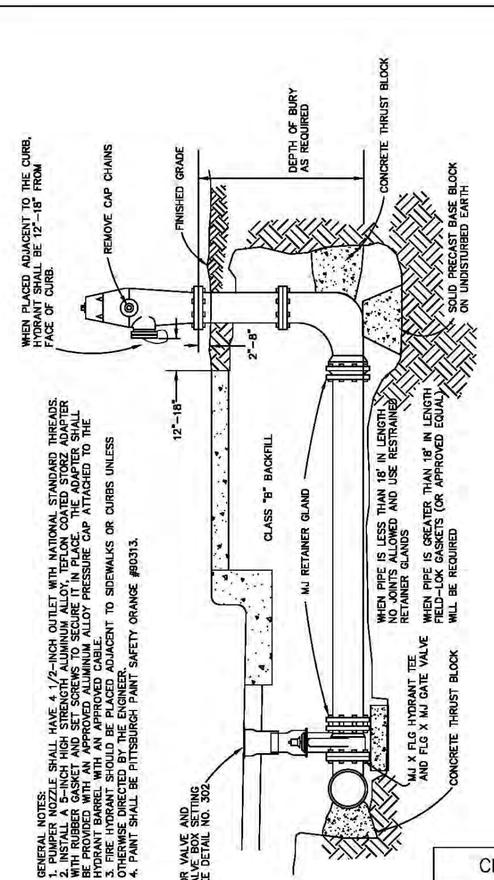

GENERAL NOTES:
1. PUMPER NOZZLE SHALL HAVE 4 1/2-INCH OUTLET WITH NATIONAL STANDARD THREADS.
2. INSTALL 5-INCH MECHANICAL JOINT ALUMINUM HYDRANT VALVE WITH 5-INCH INLET WITH RUBBER GASKET AND SET SCREWS TO SECURE IT IN PLACE. THE ADAPTER SHALL BE PROVIDED WITH A MATERIAL THAT WILL NOT PRESSURE CAP ATTACHED TO THE HYDRANT BARREL WITH AN APPROVED CHAIN.
3. THE HYDRANT SHALL HAVE A 6-INCH MECHANICAL JOINT GLAND.
4. PAINT SHALL BE PITTSBURGH PAINT SAFETY ORANGE #6313.
5. HYDRANT SHALL BE SET 2'-6" FROM CURB OR CURBS UNLESS OTHERWISE DIRECTED BY THE ENGINEER.
6. PAINT SHALL BE PITTSBURGH PAINT SAFETY ORANGE #6313.

CITY OF CORVALLIS
ENGINEERING DIVISION

FIRE HYDRANT SETTING

DATE: JULY, 2005	SCALE: NONE	STANDARD DETAIL No.
APPROVED:		303

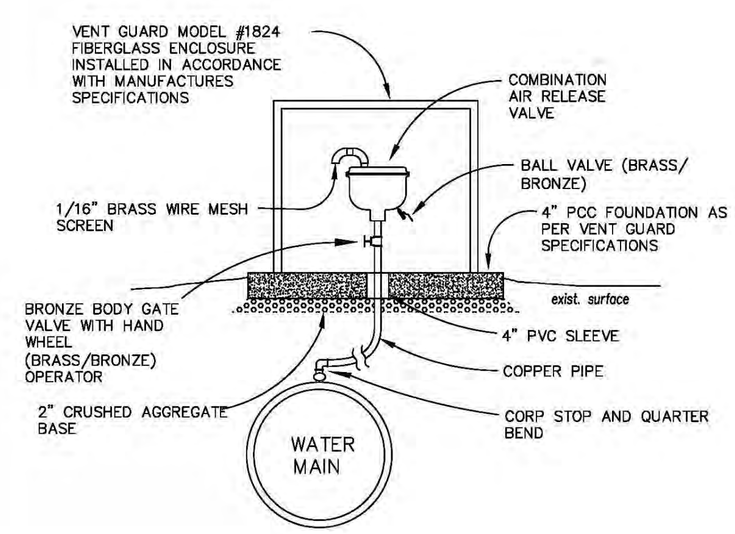

CITY OF CORVALLIS
ENGINEERING DIVISION

COMBINATION AIR RELEASE VALVE SETTING

DATE: JULY, 2005	SCALE: NONE	STANDARD DETAIL No.
APPROVED:		305

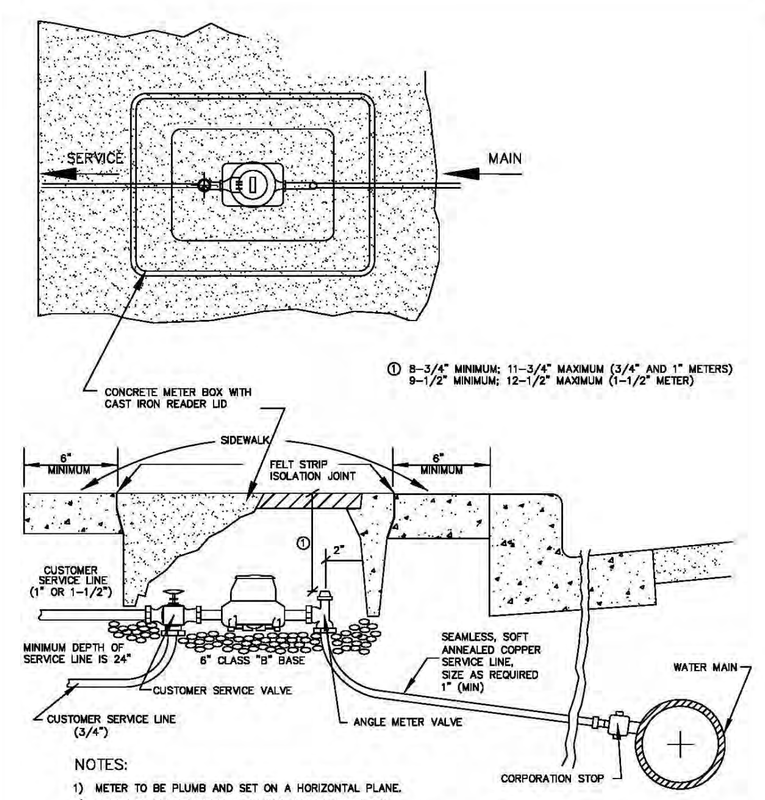

NOTES:
1) METER TO BE PLUMB AND SET ON A HORIZONTAL PLANE.
2) METER TO BE CENTERED EACH WAY INSIDE METER BOX.
3) METER BOXES SET IN TRAFFIC AREAS SHALL HAVE TRAFFIC LIDS.
4) METER BOXES SET OUTSIDE OF PAVED AREAS SHALL BE PLACED IN A 5' X 5' CONCRETE PAD.
5) WHEN PLACED IN SIDEWALK, MAINTAIN 8" MINIMUM CONCRETE AROUND THE METER BOX PERIMETER.
6) FOR 2" METERS SEE DETAIL NO. 306A

CITY OF CORVALLIS
ENGINEERING DIVISION

3/4", 1" & 1–1/2" WATER METER SETTING

DATE: JULY, 2005	SCALE: NONE	STANDARD DETAIL No.
APPROVED:		306

PIP14-1581

SR DESIGN
Engineering
Planning
8196 SW Hall Boulevard, Suite 101
Beaverton, Oregon 97008
phone (503) 469-1213
fax (503) 469-8553
www.srdllc.com

REGISTERED PROFESSIONAL ENGINEER
OREGON
SEPT. 14, 1987
STEVEN C. ROPER
EXPIRES 12–31–14

WATER DETAILS
WILLAMETTE LANDING PHASE 9
695 SE RIVERGREEN AVENUE
CORVALLIS, OREGON
LEGEND HOMES CORP., PORTLAND, OR 97223

REV.	DESCRIPTION	DATE

PROJECT NO. LEG001
CASE FILE NO. PLD13-00009 SUB13-00002

DATE 5/15/14
DESIGNED S ROPER
ENGINEER S ROPER
CHECKED
SHEET TITLE WATER DETAILS
SHEET NUMBER C202

Enclosure

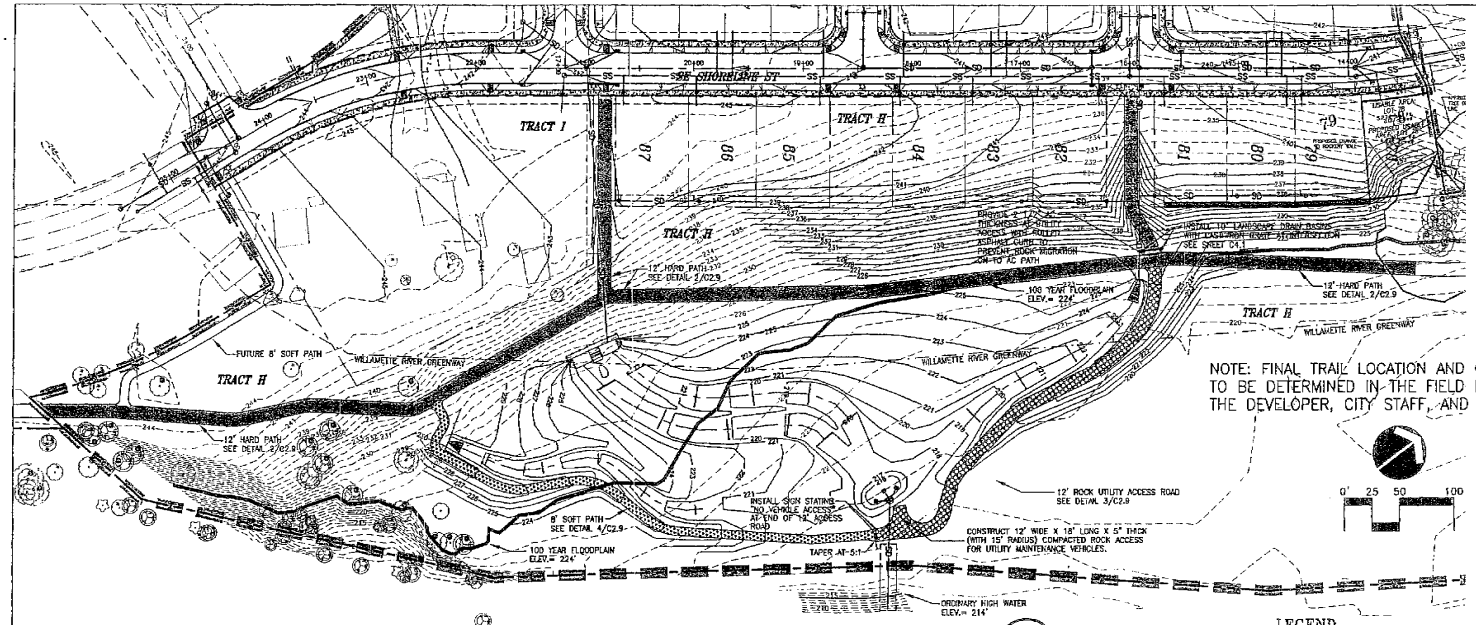

PUBLIC TRAIL PLAN (1 / C2.9)
SCALE: AS SHOWN

LEGEND
- 12' WIDE HARD PATH. SEE DETAIL 2/C2.9
- 12' WIDE UTILITY VEHICLE ACCESS. SEE DETAIL 3/C2.9
- 8' WIDE SOFT TRAIL. SEE DETAIL 4/C2.9

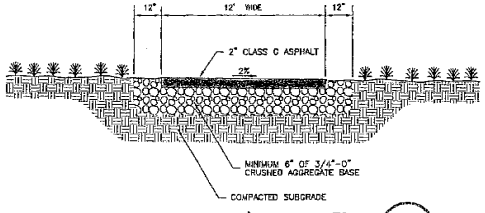

TRAIL SECTION– 12' HARD PATH (2 / C2.9)
SCALE: NTS

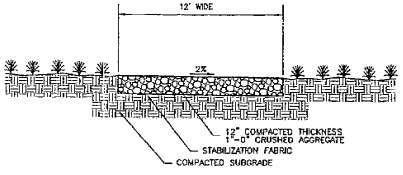

UTILITY VEHICLE ACCESS SECTION (3 / C2.9)
SCALE: NTS

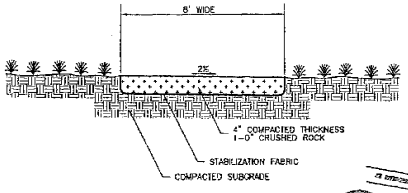

TRAIL SECTION– 8' SOFT PATH (4 / C2.9)
SCALE: NTS

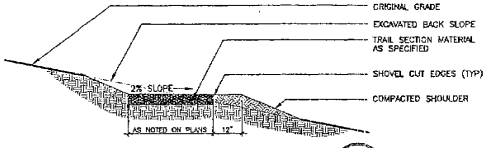

TRAIL SECTIONS AT CROSS SLOPES (5 / C2.9)
SCALE: NTS

"AS-BUILT"
DATE 11/7/02 BY JCB

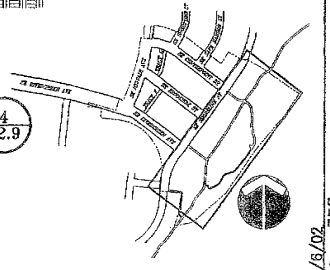

KEYMAP (6 / C2.9)
SCALE: 1" = 400'

AS BUILTS 11/6/02

03/29/2002
Date
MFK/MCM
Designed
JP, RLW
Drawn
Checked By Date

REGISTERED PROFESSIONAL ENGINEER 17347 OREGON DECEMBER 28, 1984 M. KARES KERSTA
EXPIRES JUNE 30, 2002

CORVALLIS OFFICE
115 SW Adams Ave., Suite 400
Corvallis, Oregon 97333
PHONE: (541) 754-3100
FAX: (541) 754-1161

COOS BAY OFFICE
1218 SW Connecticut St., Suite 100
Tigard, Oregon 97223
PHONE: (503) 620-2253
FAX: (503) 620-8652

PARKISON HOMES
Local Builders with Integrity
PARKISON NIELSEN HOMES LLC

Willamette Landing– Phase 2
PUBLIC TRAIL PLAN

NPDES PERMIT # P13-XXX
CORVALLIS, OREGON

otak Incorporated
Corvallis, Oregon 97339
Phone: (541) 758-1611
FAX: (541) 758-1612
Internet: www.otak.com

10925
Project No.
C2.9
Sheet No.
Copyright 2002 ©

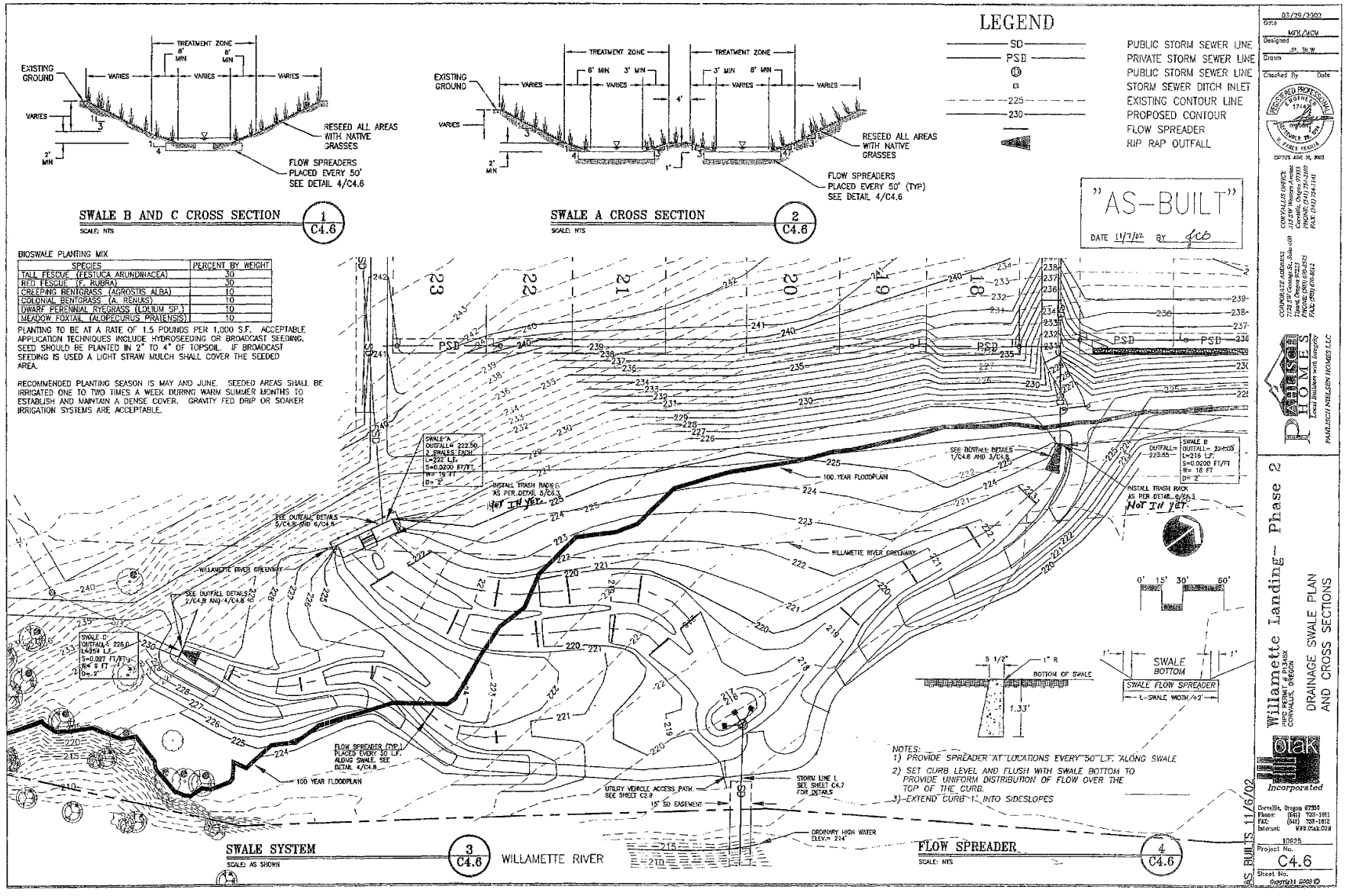
LEGEND
SD — PUBLIC STORM SEWER LINE
PSD — PRIVATE STORM SEWER LINE
PUBLIC STORM SEWER LINE
STORM SEWER DITCH INLET
225 — EXISTING CONTOUR LINE
230 — PROPOSED CONTOUR
FLOW SPREADER
RIP RAP OUTFALL
SWALE B AND C CROSS SECTION
SCALE: NTS
1 C4.6
SWALE A CROSS SECTION
SCALE: NTS
2 C4.6
TREATMENT ZONE
EXISTING GROUND
VARIES
RESEED ALL AREAS WITH NATIVE GRASSES
FLOW SPREADERS PLACED EVERY 50' SEE DETAIL 4/C4.6
"AS-BUILT"
DATE 11/7/02 BY JCO
BIOSWALE PLANTING MIX
SPECIES | PERCENT BY WEIGHT
TALL FESCUE (FESTUCA ARUNDINACEA) 30
RED FESCUE (F. RUBRA) 30
CREEPING BENTGRASS (AGROSTIS ALBA) 10
COLONIAL BENTGRASS (A. RENUIS) 10
DWARF PERENNIAL RYEGRASS (LOLIUM SP.) 10
MEADOW FOXTAIL (ALOPECURUS PRATENSIS) 10
PLANTING TO BE AT A RATE OF 1.5 POUNDS PER 1,000 S.F. ACCEPTABLE APPLICATION TECHNIQUES INCLUDE HYDROSEEDING OR BROADCAST SEEDING. SEED SHOULD BE PLANTED IN 2" TO 4" OF TOPSOIL. IF BROADCAST SEEDING IS USED A LIGHT STRAW MULCH SHALL COVER THE SEEDED AREA.
RECOMMENDED PLANTING SEASON IS MAY AND JUNE. SEEDED AREAS SHALL BE IRRIGATED ONE TO TWO TIMES A WEEK DURING WARM SUMMER MONTHS TO ESTABLISH AND MAINTAIN A DENSE COVER. GRAVITY FED DRIP OR SOAKER IRRIGATION SYSTEMS ARE ACCEPTABLE.
SWALE A OUTFALL= 222.50 2 SWALES EACH L=222 LF. S=0.0200 FT/FT W= 19 FT D= 2'
INSTALL TRASH RACK AS PER DETAIL 5/C4.3 NOT IN YET
SEE OUTFALL DETAILS 5/C4.6 AND 6/C4.6
WILLAMETTE RIVER GREENWAY
SEE OUTFALL DETAILS 2/C4.6 AND 4/C4.6
SWALE C OUTFALL= 228.0 L=364 LF. S=0.027 FT/FT W= 9 FT D= 2'
FLOW SPREADER (TYP.) PLACED EVERY 50 L.F. ALONG SWALE. SEE DETAIL 4/C4.6
100 YEAR FLOODPLAIN
UTILITY VEHICLE ACCESS PATH SEE SHEET C2.9
15' SD EASEMENT
STORM LINE L SEE SHEET C4.7 FOR DETAILS
ORDINARY HIGH WATER ELEV.= 214'
SEE OUTFALL DETAILS 1/C4.6 AND 3/C4.6
SWALE B OUTFALL= 224.00 L=216 LF. S=0.0200 FT/FT W= 18 FT D= 2'
OUTFALL= 223.85
INSTALL TRASH RACK AS PER DETAIL 6/C4.3 NOT IN YET
0' 15' 30' 60'
5 1/2" 1" R BOTTOM OF SWALE 1.33'
SWALE BOTTOM
SWALE FLOW SPREADER
L=SWALE WIDTH/+2'
NOTES:
1) PROVIDE SPREADER AT LOCATIONS EVERY 50 L.F. ALONG SWALE
2) SET CURB LEVEL AND FLUSH WITH SWALE BOTTOM TO PROVIDE UNIFORM DISTRIBUTION OF FLOW OVER THE TOP OF THE CURB.
3) EXTEND CURB 1' INTO SIDESLOPES
SWALE SYSTEM
SCALE: AS SHOWN
3 C4.6
WILLAMETTE RIVER
FLOW SPREADER
SCALE: NTS
4 C4.6
AS BUILTS 11/6/02
03/29/2002
MFK/MCM
Checked By Date
REGISTERED PROFESSIONAL ENGINEER
EXPIRES ADE 30, 2003
CORVALLIS OFFICE: 115 SW Western Avenue Corvallis, Oregon 97333 PHONE: (541) 754-2003 FAX: (541) 754-1141
CORPORATE ADDRESS: 7142 SW Cantage St., Suite 100 Portland, Oregon 97223 PHONE: (503) 670-2505 FAX: (503) 670-8612
PARKSCO HOMES
Local Builders with Integrity
PARKSCO HOMES LLC
Willamette Landing- Phase 2
DRAINAGE SWALE PLAN AND CROSS SECTIONS
PIPC PERMIT # P13486 CORVALLIS, OREGON
Oak Incorporated
Corvallis, Oregon 97333
Phone: (541) 738-1811
FAX: (541) 738-1812
Internet: WWW.OAK.COM
10925
Project No.
C4.6
Sheet No.
Copyright 2002 ©

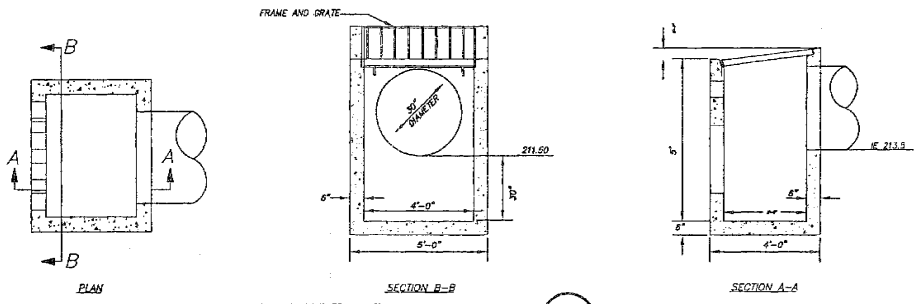

INLET STRUCTURE
SCALE: NTS
1 C4.7

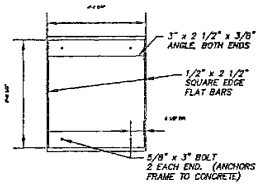

INLET STRUCTURE FRAME
SCALE: NTS
2 C4.7

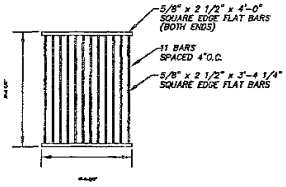

INLET STRUCTURE GRATE
SCALE: NTS
3 C4.7

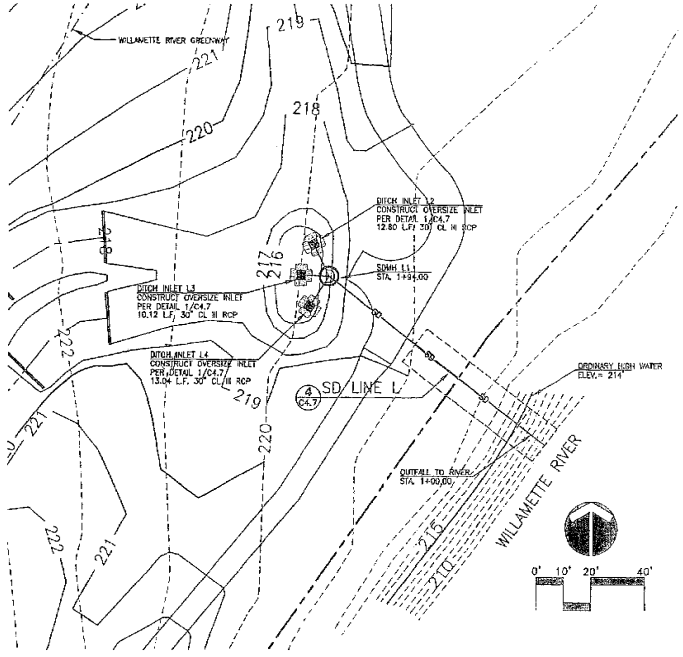

"AS-BUILT"
DATE 11/7/02 BY JCB

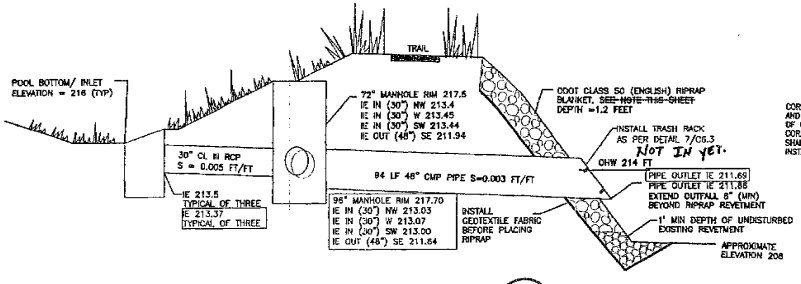

CORRUGATED METAL PIPE SHALL BE GALVANIZED AND HAVE A CROSS SECTIONAL WALL THICKNESS OF 0.064 INCHES WITH 2 2/3 X1/2 INCH CORRUGATIONS. CORRUGATED METAL PIPE SHALL CONFORM TO ASTM A 760 SPECIFICATIONS. INSTALLATION SHALL CONFORM TO ASTM A 798.

OUTFALL DETAIL
SCALE: NTS
4 C4.7

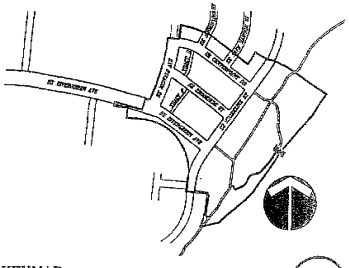

KEYMAP
SCALE: 1"= 400'
5 C4.7

AS BUILTS 11/6/02

03/29/2002
Date
MFK/MCM
Designed
JP, BLW
Drawn
Checked By Date

REGISTERED PROFESSIONAL ENGINEER
MICHAEL F. KNIGHT
OREGON
NOVEMBER 26, 1996
EXPIRES JUNE 30, 2003

CORVALLIS OFFICE
215 SW Washington Avenue
Corvallis, Oregon 97333
PHONE: (541) 754-1707
FAX: (541) 754-1141

CORPORATE ADDRESS
7124 N. Gilmore St., Suite 100
Portland, Oregon 97203
PHONE: (503) 978-1203
FAX: (503) 978-1612

PARKSIDE HOMES
Local Builders with Integrity
PARKSIDE HOMES LLC

Willamette Landing- Phase 2

PIPC PERMIT # P1345X
CORVALLIS, OREGON

STORM SYSTEM OUTFALL DETAILS
DITCH INLET DETAIL

otak Incorporated
Corvallis, Oregon 97339
Phone: (541) 753-1611
FAX: (541) 758-1612
Internet: WWW.Otak.COM

10925
Project No.
C4.7
Sheet No.
Copyright 2002 ©

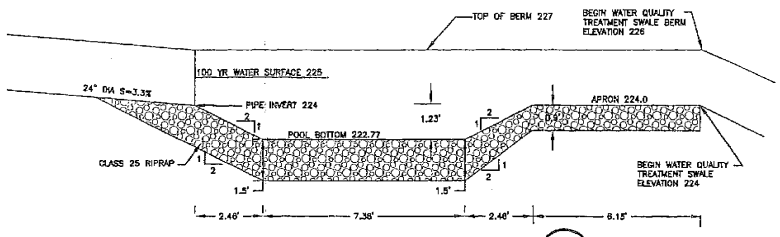

SWALE B RIPRAP CENTERLINE SECTION 1 / C4.8

SCALE: 1"= 2'

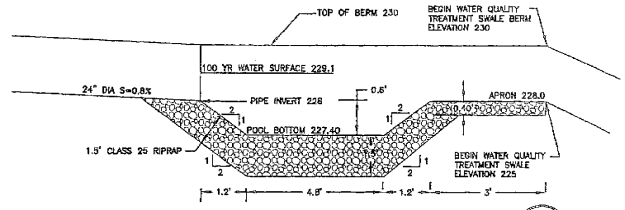

SWALE C RIPRAP CENTERLINE SECTION 2 / C4.8

SCALE: 1"= 2'

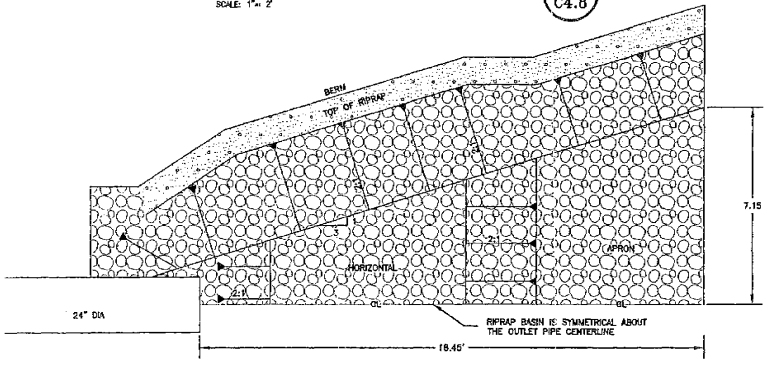

SWALE B RIPRAP DETAIL HALF PLAN 3 / C4.8

SCALE: NTS

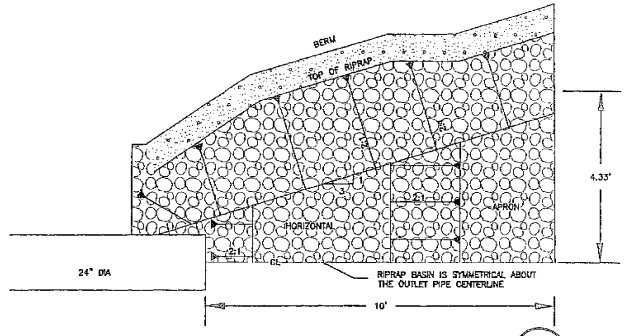

SWALE C RIPRAP DETAIL HALF PLAN 4 / C4.8

SCALE: NTS

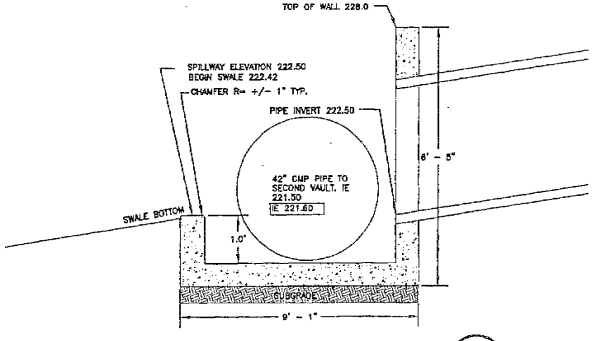

SWALE A HEADWALL AND SUMP SECTION 5 / C4.8

SCALE: NTS

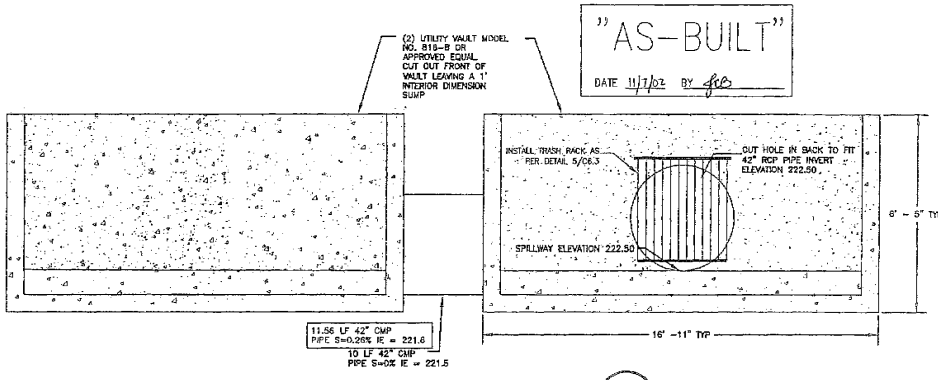

SWALE A HEADWALL AND SUMP ELEV. 6 / C4.8

SCALE: NTS

Date 03/20/2002

Designed MFK/MGM

Drawn JP, BLW

Checked By Date

REGISTERED PROFESSIONAL ENGINEER 17361 OREGON JAMES K. GREEN EXPIRES 12-31-03

EXPIRES JUNE 30, 2003

CORVALLIS OFFICE 1777 NW Monroe Avenue Corvallis, Oregon 97330 PHONE: (541) 754-1162 FAX: (541) 754-1411

CHARBONEAU ADDITION 7122 SW Cemetery St., Suite 100 Tigard, Oregon 97223 PHONE: (503) 684-0985 FAX: (503) 684-0412

PARISCH NIGLSKY HOMES

Local Builders with Integrity

PARISCH NIGLSKY HOMES LLC

Willamette Landing - Phase 2

PIPC PERMIT # P1345X CORVALLIS, OREGON

STORM OUTFALL DETAILS

Oak Incorporated

Corvallis, Oregon 97330
Phone: (541) 758-1811
FAX: (541) 758-1842
Internet: WWW.OAKCOM

AS BUILTS 11/6/02

10923
Project No.

C4.8
Sheet No.

Copyright 2000 ©