Environmental Studies at Two Ocean Disposal Sites Off the Mouth of the Columbia River

June 26, 2002

Presented by:

Dr. Jack Word (MEC)

152 Sunset View Lane
Sequim, WA 98382
(360) 582-1758

Tim Hammermeister (SAIC)

18706 North Creek Parkway, Suite 110
Bothell, WA 98011
(425) 482-3306

Biological Baseline Study Objectives

- Characterize Benthic Invertebrate Community
- Characterize Demersal Fish Community
- Characterize Demersal Macroinvertebrate Community
- Assess Relative Abundance of Dungeness Crab Populations
- Provide Physical Characterization of Benthic Habitat
- Assess Uniqueness of the Sites

Sampling Methods

Data Type	SPI	Sediment Grab	Bottom Trawl	Crab Pots	Literature Review
Benthic Infauna	X	X			X
Demersal Invertebrates		X	X		X
Demersal Fish			X		X
Dungeness Crab			X	X	X
Sediment Conventionals	X	X			X

Shallow Water Site (Site E)

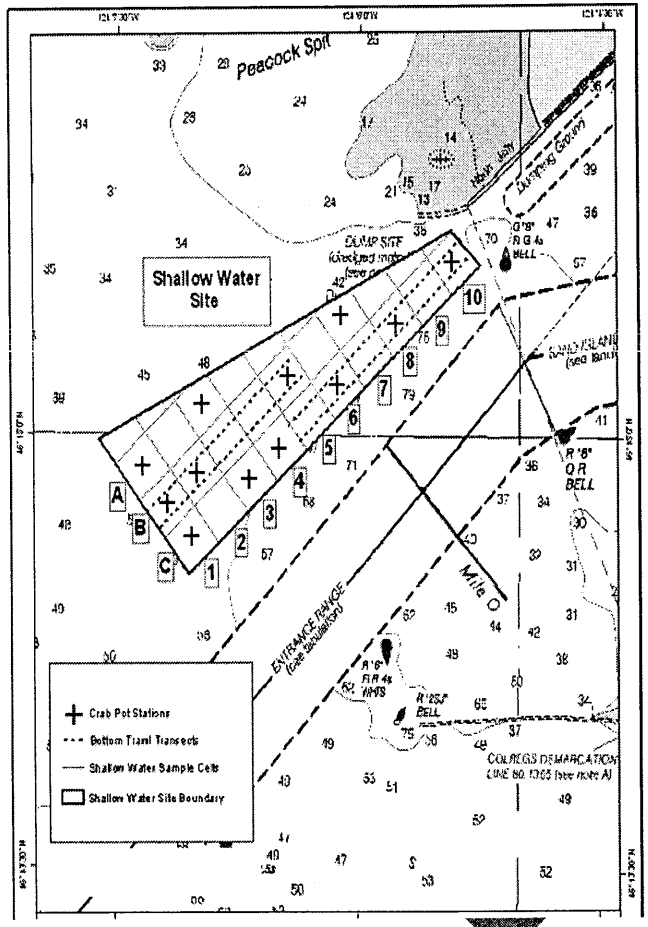

Deep Water Site

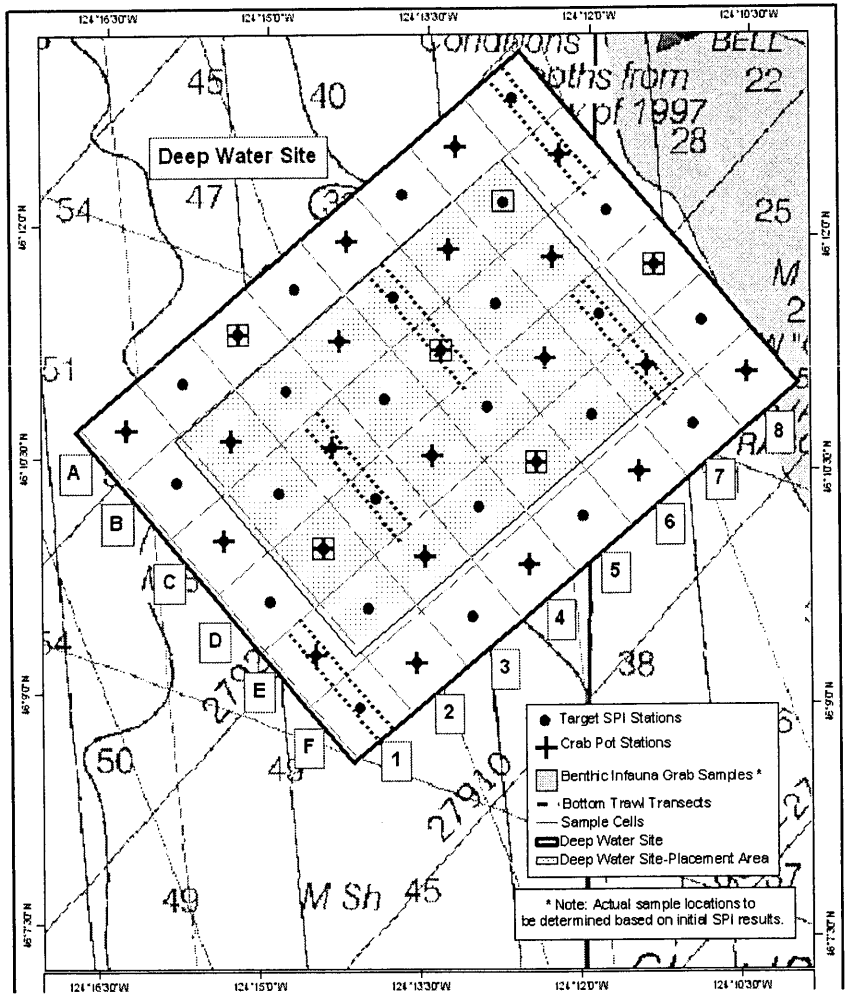

Sample Type and Numbers

Sample Type	Shallow Water Site		Deep Water Site	
	Spring	Fall	Spring	Fall
Sediment Profile Images (3 replicates each)	0	0	48	48
Plan-View Images (3 replicates each)	0	0	48	48
Benthic Infauna (5 *or 1* replicates each)	0	0	5 + (*4*)	5 + (*4*)
Sediment Conventionals (Grain Size & TOC; 1 rep each)	0	0	5 + (*4*)	5 + (*4*)
Bottom Trawls (2 replicates each)	2	2	5	5
Commercial Crab Pots (2 24-hr Deployments)	12	12	24	24

Sampler Types

- Benthos Model 3731 Sediment Profile Camera
- Double van-Veen Grab Sampler (0.1 m^2)
- 24-ft Semi-Balloon Otter Trawl
- 38” Diameter Commercial Crab Pots

SPI Deployment Schematic

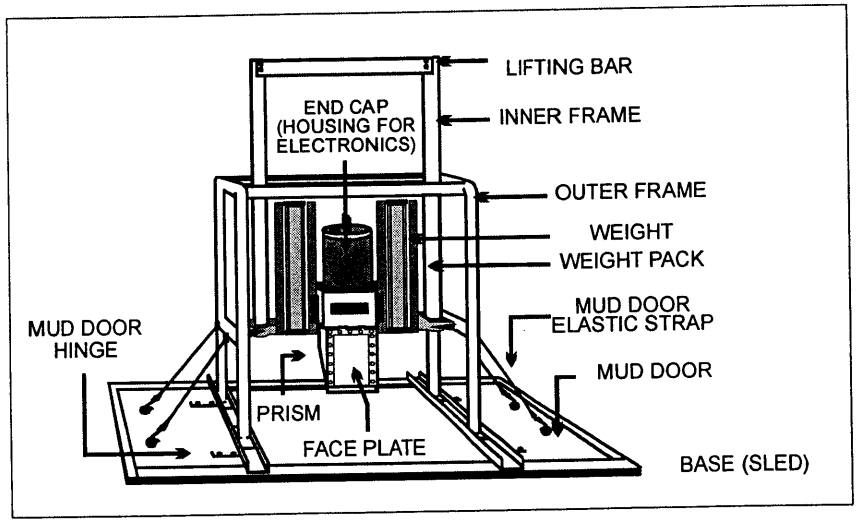

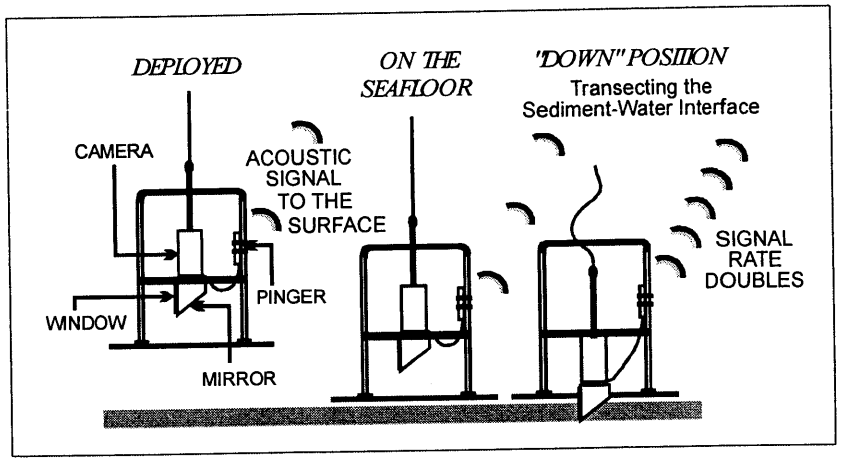

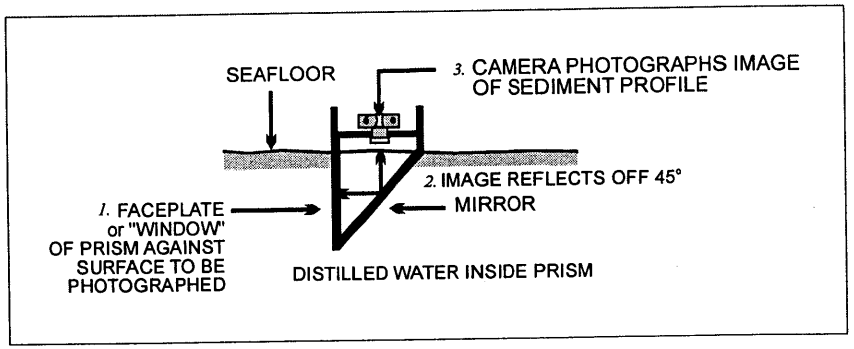

SPI Analysis

- Benthic Invertebrate Successional Stage
- Grain Size Mode and Range
- Dredged Material Deposition and Thickness
- Erosional/Depositional Features
- Depth of Redox Layer
- Subsurface Gas Pockets
- Organism-Sediment Index

Analytical Strategy

- Assumptions:
  - Sampling types lead to refinement of stations
  - Stations with similar benthic infaunal structure will retain similarity under various oceanic conditions.
    - » H_0: No difference in Station Similarity Groupings
  - Stations that are similar now are expected to be similar during future sampling events.
    - » Outliers stations identified in the future would be those most likely influenced by factors other than oceanic conditions (e.g., dredged material disposal)