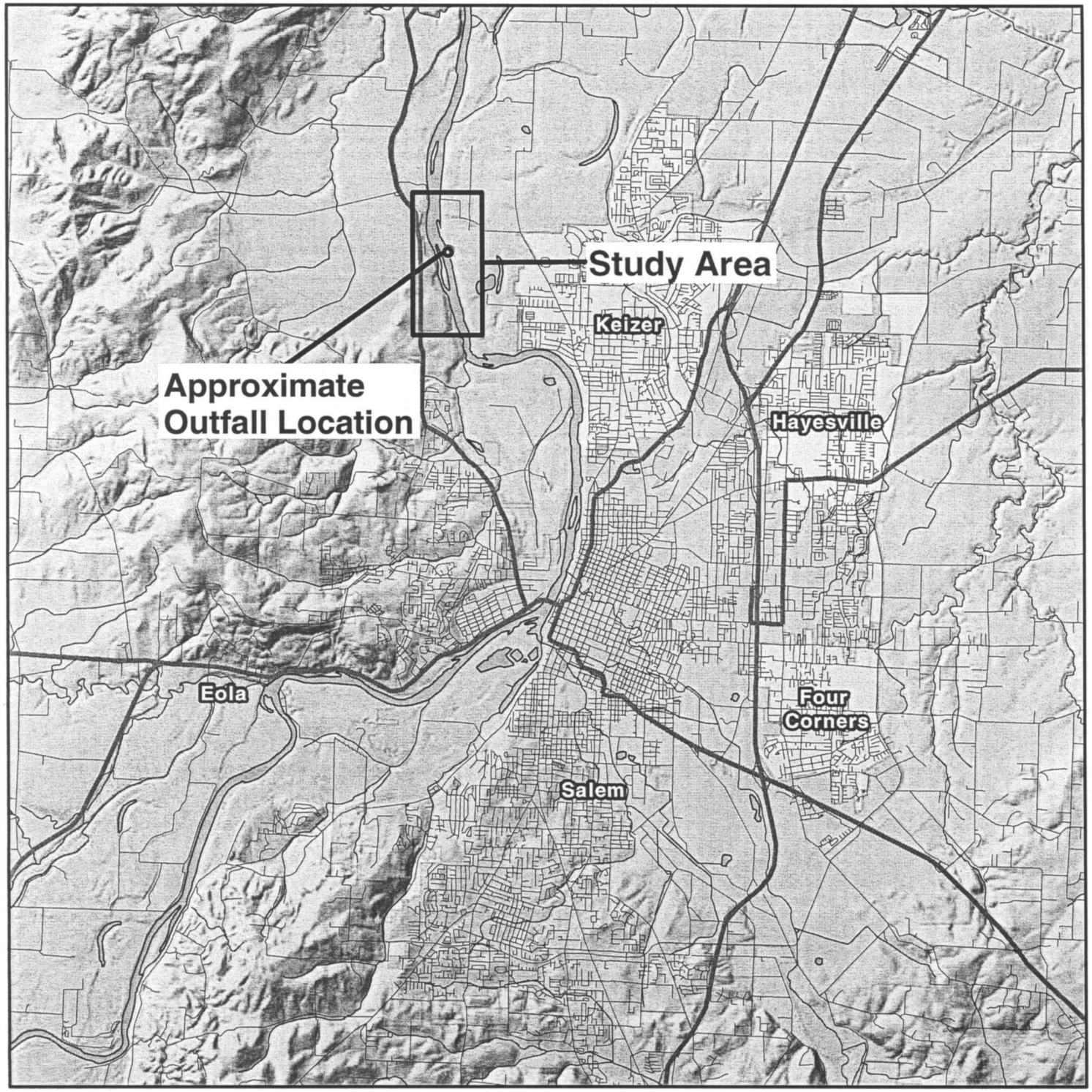

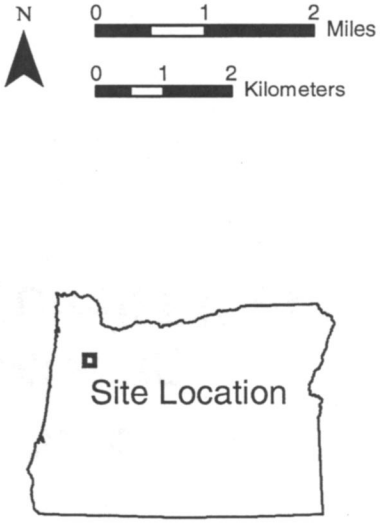

Figure 1
Study Area

LTI Environmental Engineering
A Division of Limno-Tech, Inc.
501 Avis Drive, Ann Arbor, MI 48108

NMP-2003-709

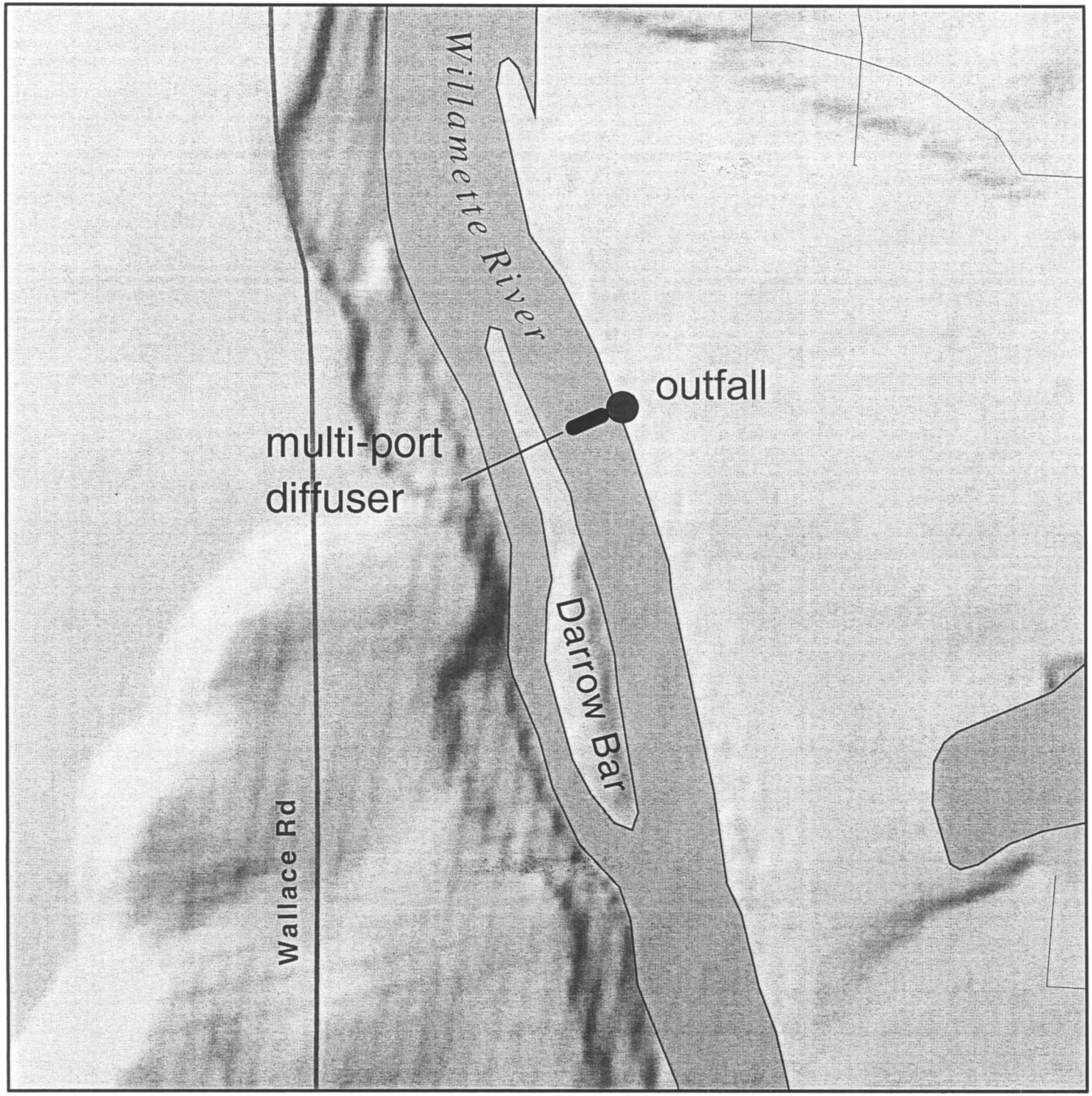

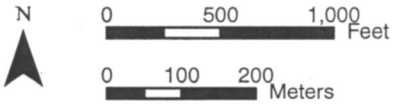

Figure 2
Existing
Outfall Diffuser

LTI Environmental Engineering
A Division of Limno-Tech, Inc.
501 Avis Drive, Ann Arbor, MI 48108

NMP-2003-709

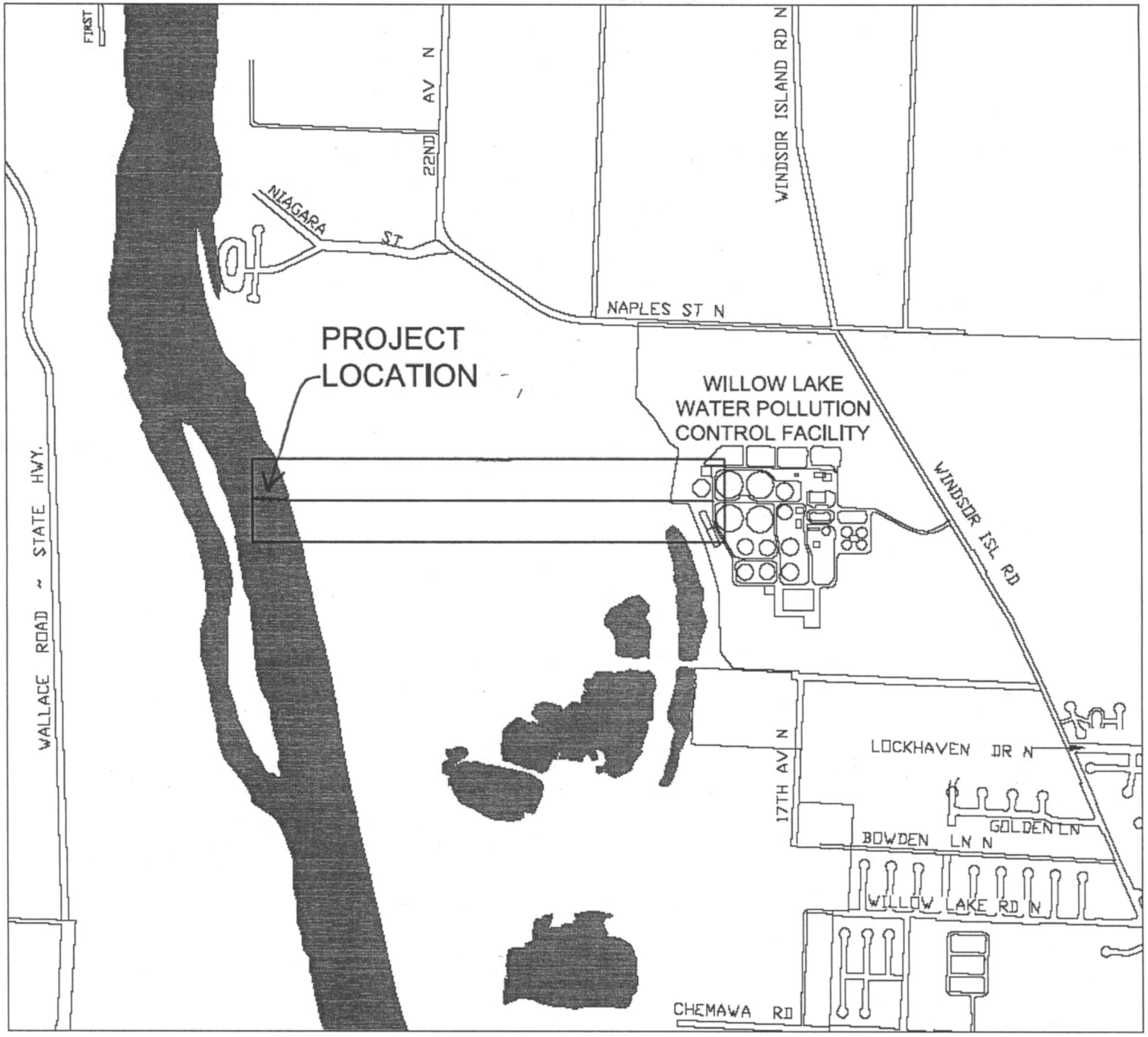

SITE MAP

0 250 1000 2000

PLAN NORTH

FIGURE 3

NWP-2003-709

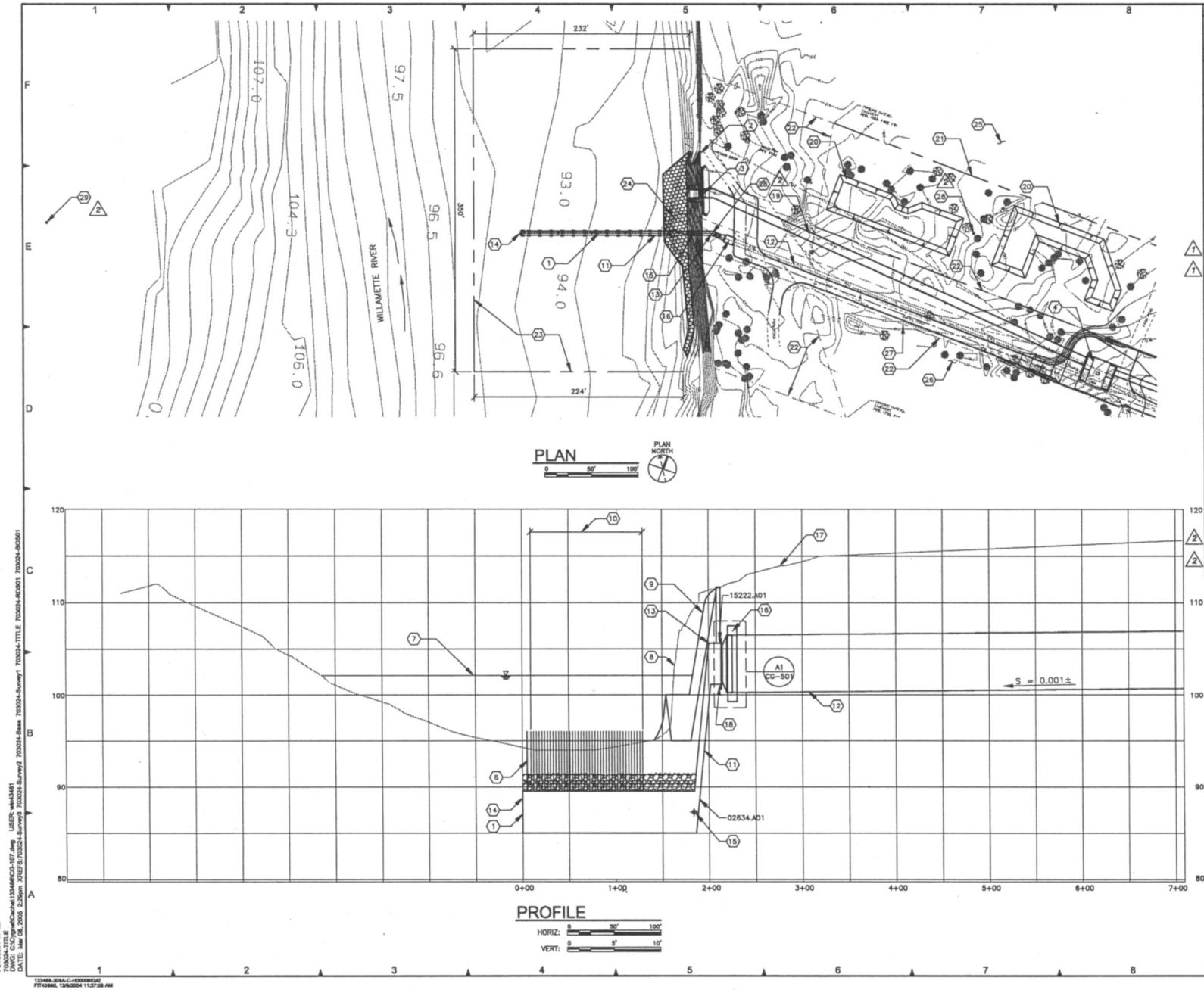

SHEET NOTES

1. CONTRACTOR SHALL VERIFY IE OF EXIST 75" OUTFALL PIPE AT CONNECTION TO NEW DIFFUSER PIPE AND AT THE OUTFALL DIVERSION STRUCTURE.

REFERENCE KEYNOTES

DIVISION 15 – MECHANICAL

15222.A01 STEEL PIPE

SHEET KEYNOTES

1. NEW DIFFUSER, SEE DIFFUSER PLAN ON DRAWING CD-110.
2. GRADE REVISED TO 1 1/2:1 SLOPE.
3. BANK OUTFALL STRUCTURE, SEE DRAWING SB-101.
4. OUTFALL DIVERSION STRUCTURE, SEE DRAWING SB-107.
5. NOT USED.
6. INTAKE VALVE.
7. AVG WS EL 103± DURING IN-WATER WORK PERIOD.
8. EXIST BANK AT EXIST OUTFALL.
9. NEW BANK LINE.
10. 41 DIFFUSER PORTS EQUALLY SPACED ACROSS 120.00'. CONTRACTOR FURNISHED.
11. NEW CONTRACTOR FURNISHED 54" OD DIFFUSER PIPE.
12. EXISTING 75" ID CONCRETE OUTFALL PIPE. OWNER FURNISHED.
13. N=500119.52, E=7537298.88, CL ANGLE POINT DEFL 21°8'43".
14. N=500052.13,E=7537102.39 CL END OF PIPE.
15. N=500112.94 E=7537277.73 CL 45° BEND UP.
16. N=500118.83 E=7537316.32 CL CONNECT TO EXISTING 75" OUTFALL PIPE.
17. EXISTING GROUND SURFACE.
18. STEEL TEE AND REDUCER.
19. 8'x7' BOX CULVERT.
20. TEMPORARY DEWATERING RETENTION BASIN. SEE DRAWING CE-107.
21. TEMPORARY EASEMENT.
22. PERMANENT EASEMENT.
23. IN WATER EASEMENT.
24. EXISTING OUTFALL TO BE DEMOLISHED, SEE DRAWING CD-101.
25. DUCH PROPERTY.
26. BLAKE PROPERTY.
27. EXISTING PROPERTY LINE.
28. SURVEY MONUMENTS FOR DIFFUSER ALIGNMENT. REBAR DRIVEN INTO GROUND & PAINTED ORANGE.
29. SURVEY STAKE ON RIVER BANK FOR DIFFUSER ALIGNMENT.

CITY OF Salem AT YOUR SERVICE

SHEET PREPARED BY:

BLACK & VEATCH Corporation
Portland, Oregon

This drawing was originally sealed by Harold Wayne Gresh a licensed professional engineer in the State of Oregon, Number 18350.

CERTIFICATE EXPIRES:
DATE SIGNED:

VERIFY SHEET SIZE
BAR IS ONE INCH ON ORIGINAL DRAWING
0 1"
IF NOT ONE INCH, SHEET SIZE HAS BEEN MODIFIED

WILLOW LAKE WPCF OUTFALL AND DIFFUSER PROJECT

REVISIONS

NO.	DESCRIPTION	DATE	BY
2	CONFORMING TO CONSTRUCTION RECORDS	12/04	HWG
1	ADDENDUM NO. 1	05/04	HWG

PROJECT NO:	703024
DATUM:	N/A
SURVEY:	N/A
HORIZ SCALE:	1" = 50'
VERT SCALE:	1" = 5'
DESIGN:	SGC, DMC
DRAWN:	B&V
CHECKED:	JAR
APPROVED:	

SHEET TITLE

DIFFUSER PLAN AND PROFILE

CG-107

SHEET 11 OF 64

NWP-2003-709

FIGURE 4

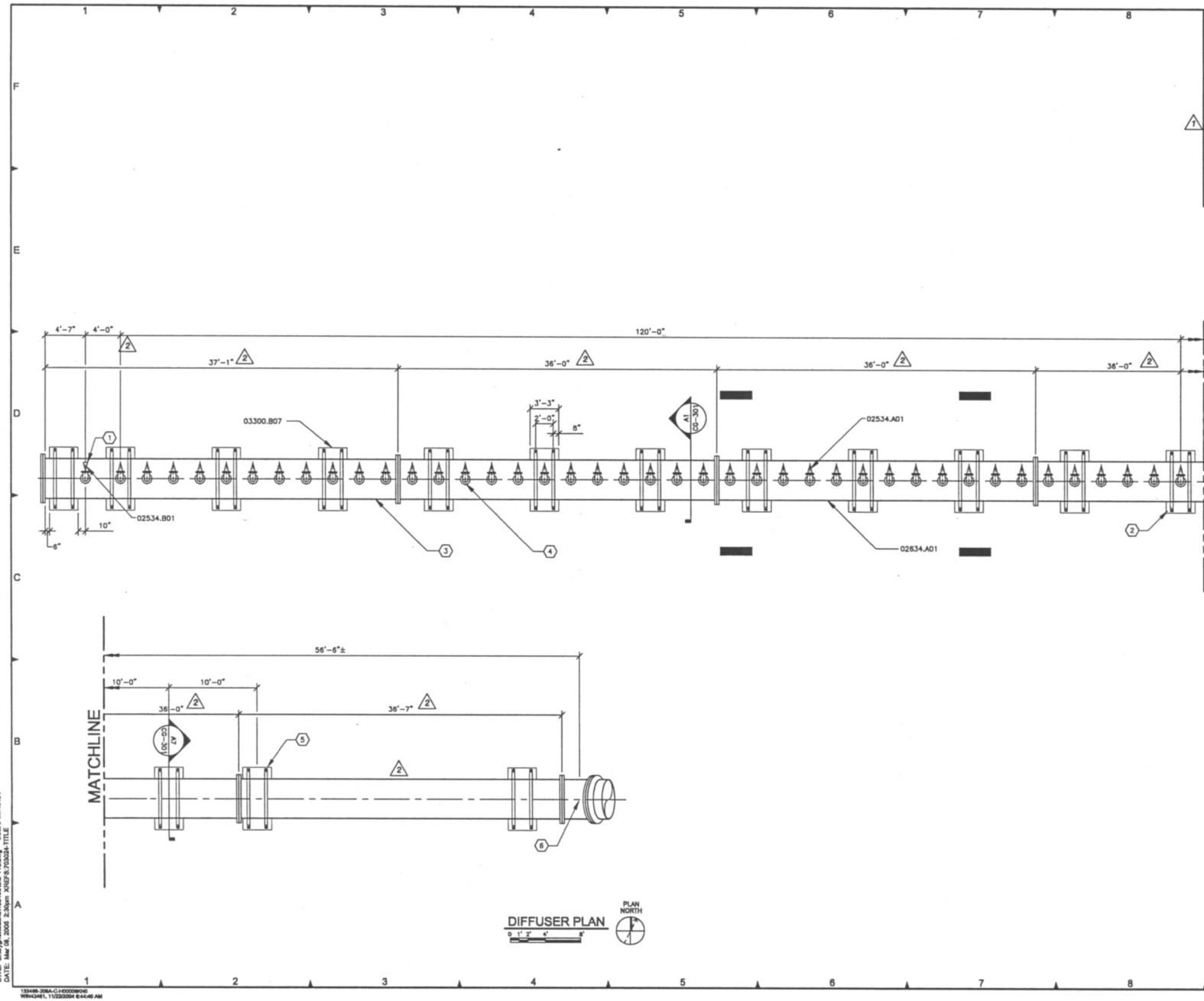

REFERENCE KEYNOTES

DIVISION 3 – CONCRETE

03300.B07 CLASS 3 CONCRETE

SHEET KEYNOTES

1. OWNER FURNISHED INTAKE VALVE.
2. CONCRETE WEIGHT AT EVERY FOURTH DIFFUSER AND WEST END OF DIFFUSER (TYP 12 THIS SECTION, 17 TOTAL REQUIRED).
3. CONTRACTOR FURNISHED, ASSEMBLED & INSTALLED 54" OD DIFFUSER.
4. OWNER FURNISHED DIFFUSER PORT (TYP), EQUALLY SPACE 41 DIFFUSER PORTS ACROSS 120' OF PIPE.
5. CONCRETE WEIGHT AT 10'-0" CENTERS (TYP 5 THIS SECTION, 17 TOTAL REQUIRED).
6. CL OF 45° BEND ANGLE POINT.

CITY OF Salem AT YOUR SERVICE

SHEET PREPARED BY:

BLACK & VEATCH Corporation
Portland, Oregon

This drawing was originally sealed by Harold Wayne Gresh a licensed professional engineer in the State of Oregon, Number 18350.

CERTIFICATE EXPIRES:
DATE SIGNED:

VERIFY SHEET SIZE
BAR IS ONE INCH ON ORIGINAL DRAWING
0 1"
IF NOT ONE INCH, SHEET SIZE HAS BEEN MODIFIED

WILLOW LAKE WPCF OUTFALL AND DIFFUSER PROJECT

REVISIONS

NO.	DESCRIPTION	DATE	BY
2	CONFORMING TO CONSTRUCTION RECORDS	12/04	HWG
1	ADDENDUM #1	05/04	HWG

PROJECT NO:	703024
DATUM:	N/A
SURVEY:	N/A
HORIZ SCALE:	3/16" = 1'-0"
VERT SCALE:	N/A
DESIGN:	DMC
DRAWN:	BAV
CHECKED:	JAR
APPROVED:	

SHEET TITLE

DIFFUSER PLAN

CG-110

SHEET 12 OF 64

F0703024-TITLE
703024-TITLE
DWG: C:\Cgnet\Cornel133486\CG-110.dwg USER: wwh3461
DATE: Mar 08, 2005 2:30pm XREF:S:703024-TITLE

133486-208A-C-H00008H0
WRH43461, 11/22/2004 8:44:40 AM

NWP-2003-709

FIGURE 5

REFERENCE KEYNOTES

DIVISION 2 — SITEWORK

02055.A01	GENERAL FILL & EMBANKMENT MATERIAL
02055.B01	ZONE 1 MATERIAL 3/4"-1/2" CRUSHED
02055.B02	ZONE 2 MATERIAL 4"-8" CRUSHED

DIVISION 3 — CONCRETE

03200.A04	DUCTILE IRON REINFORCING BARS
03300.B07	CLASS C CONCRETE

SHEET KEYNOTES

1. BACKFILL WITH EXCAVATED TRENCH MATERIAL.
2. CONTRACTOR FURNISHED 54" OD PIPE, IE 85.0.
3. CONTRACTOR FURNISHED 12" DIAMETER RISER.
4. CONTRACTOR FURNISHED 12" x 10" REDUCING ELBOW.
5. NOT USED.
6. OWNER FURNISHED 10" DUCKBILL DIFFUSER VALVE.
7. CONCRETE WEIGHT, SEE DETAIL A7, THIS DWG.
8. 1/4" SS CHAIN.
9. RESTORE RIVER BOTTOM TO PRECONSTRUCTION CONDITIONS.
10. LIMIT OF TRENCH EXCAVATION.
11. RIVER BOTTOM EL VARIES.
12. 7/8"x 11" SS STRAP (TYP 2 PER CONCRETE BLOCK). FABRICATE STRAP LENGTH TO ENSURE NO SLIPPAGE OF PIPE WHEN PROPERLY ATTACHED.
13. 1/8"-1/4" THK RUBBER GASKET AROUND PIPE AND UNDER STRAPS.
14. WELD SS STRAP TO ANGLE.
15. 1" DIA SS ANCHOR.
16. SS WASHER AND NUT.
17. 3x3x3/8"x4" LONG SS ANGLE.

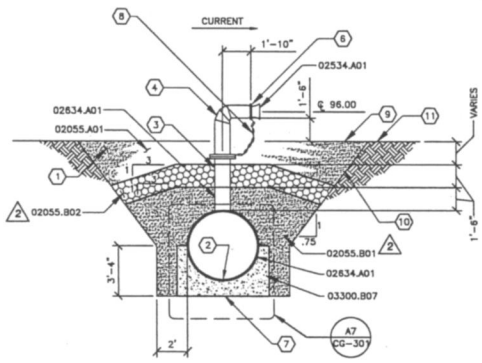

A1 DIFFUSER SECTION

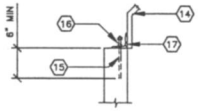

A5 STRAP ANCHOR DETAIL
NTS

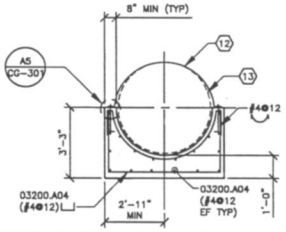

A7 PIPE CONCRETE WEIGHT SECTION
NTS

CITY OF Salem AT YOUR SERVICE

SHEET PREPARED BY:

BLACK & VEATCH Corporation
Portland, Oregon

This drawing was originally sealed by Harold Wayne Gresh a licensed professional engineer in the State of Oregon, Number 18350.

CERTIFICATE EXPIRES:
DATE SIGNED:

VERIFY SHEET SIZE
BAR IS ONE INCH ON ORIGINAL DRAWING
0 1"
IF NOT ONE INCH, SHEET SIZE HAS BEEN MODIFIED

WILLOW LAKE WPCF OUTFALL AND DIFFUSER PROJECT

REVISIONS

NO.	DESCRIPTION	DATE	BY
2	CONFORMING TO CONSTRUCTION RECORDS	12/04	HWG

PROJECT NO:	703024
DATUM:	NGVD 1929
SURVEY:	N/A
HORIZ SCALE:	AS SHOWN
VERT SCALE:	AS SHOWN
DESIGN:	DMC
DRAWN:	B&V
CHECKED:	JAR
APPROVED:	

SHEET TITLE

DIFFUSER SECTIONS

CG-301

SHEET 17 OF 64

703024-TITLE
DGN: C:\Temp\AcCache\133448\CG-301.dwg USER: wrk3461
DATE: Mar 08, 2005 2:40pm XREFS:703024-TITLE

NWP-2003-709

FIGURE 6

December 8, 2009
J. Russell

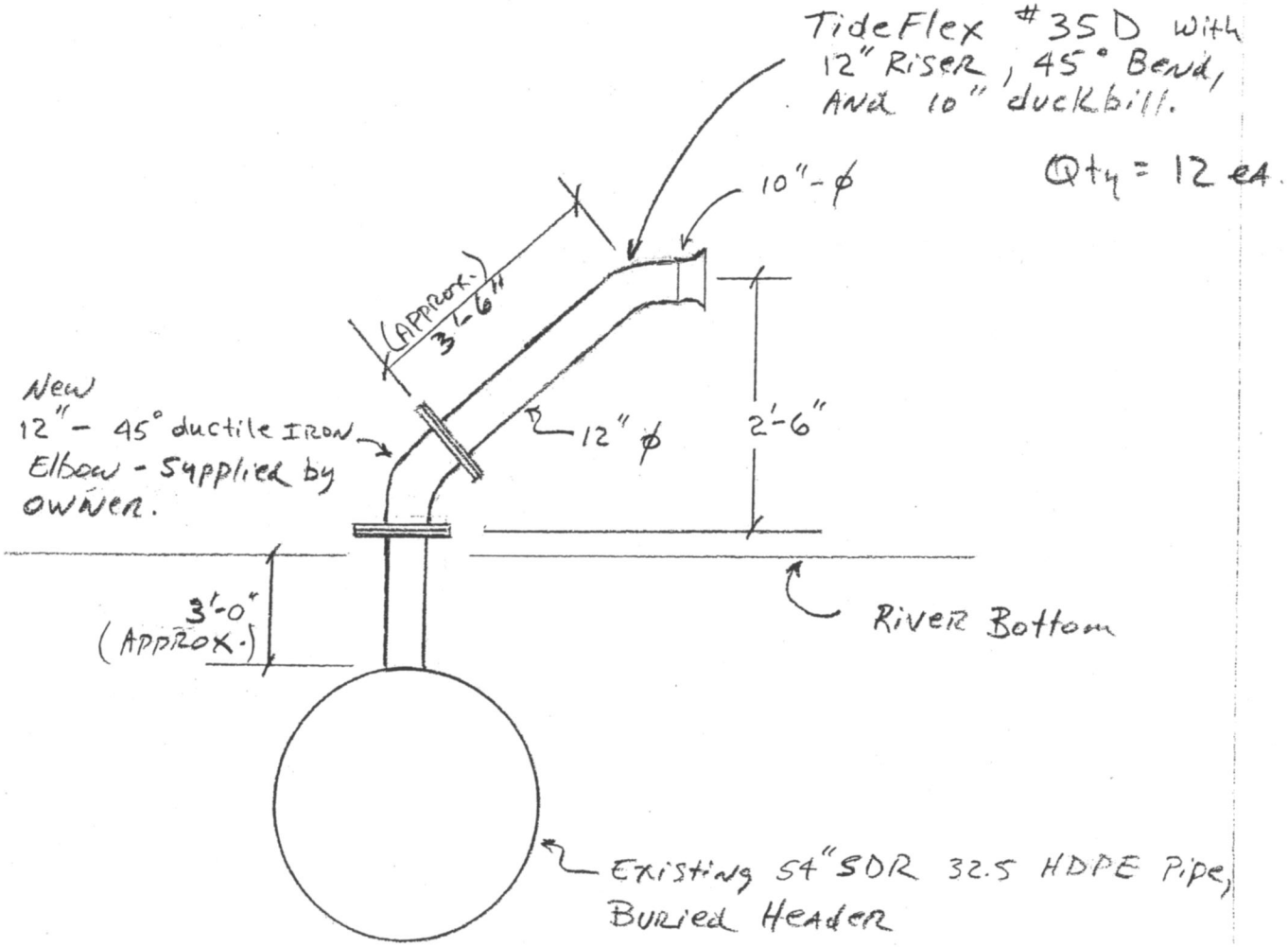

PROPOSED FLEXIBLE RISER

FIGURE 7

NWP-2003-709