UNITED STATES DEPARTMENT OF AGRICULTURE

FOREST SERVICE – REGION SIX

WALLOWA–WHITMAN NATIONAL FOREST

WHITMAN RANGER DISTRICT

DRAWINGS FOR PROPOSED

7370 REALIGNMENT AND CULVERT REPLACEMENTS
FSR 7370 MP 0.0–0.6

TABLE OF CONTENTS

Sheet Number	Sheet Title
1	Title Sheet
2	Vicinity Map
3	Estimate of Quantities
4	General Notes
Deep Creek Culvert Replacement and Realignments	
5	Site Plan and Drainage details
6	Grading Plan
7	Cross Section & FSR 7370 Typical
8	Culvert Layout & X-Section
9	Stream Profile & Cross Section
10	Stream Simulation Details
Bull Run Creek Culvert Replacement	
11	Site and Grading Plan
12	Cross Section & FSR 7370 Typical
13	Culvert Layout & X-Section
14	Stream Profile & Cross Section
15	Stream Simulation Details

AREA LOCATION MAP

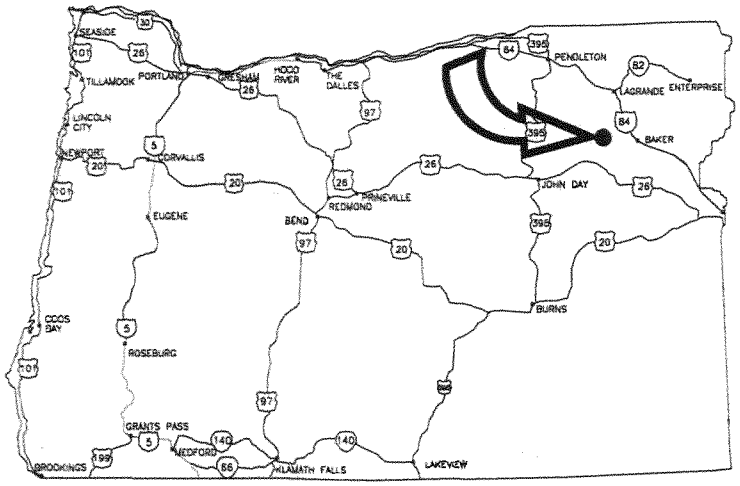

KEY MAP OF OREGON SHOWING LOCATION OF PROJECT

U.S. DEPARTMENT OF AGRICULTURE
FOREST SERVICE
R-6
PACIFIC NORTHWEST REGION

Forest: WALLOWA–WHITMAN N.F.
Project: 7370 Realignment and Culvert Replacements

Drawn: B. YAW
Design: B. YAW
Checked: D. TAYLOR
Reviewed: N. DRISKELL

APPROVED BY
JEFF TOMAC, DISTRICT RANGER — DATE

CERTIFIED TECHNICALLY ADEQUATE
NOLA DRISKELL, FOREST ENGINEER — DATE

Sheet Title: TITLE SHEET
Scale: NTS
Sheet Number: 1 OF 15

NWP-2014-86

CULVERT LAYOUT

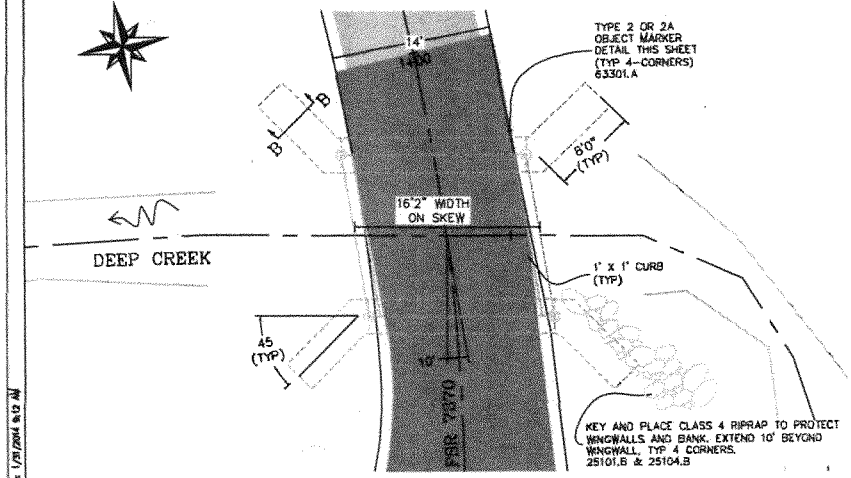

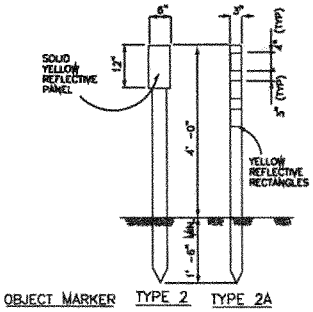

TYPE 2 – 4X4 TREATED TIMBER OR GALVANIZED STEEL POST ⌒ 1.1 LBS/FT

TYPE 2A – FLEXIBLE FIBERGLASS POST ("CARSONITE")

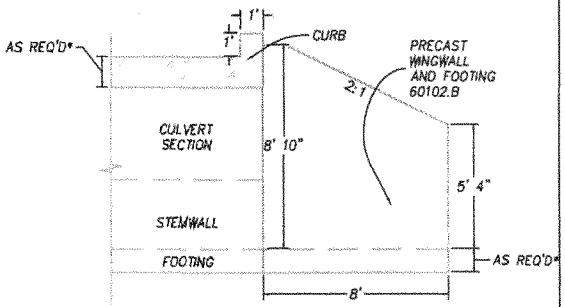

WINGWALL DETAIL

BULL RUN CREEK BOX CULVERT SECTION

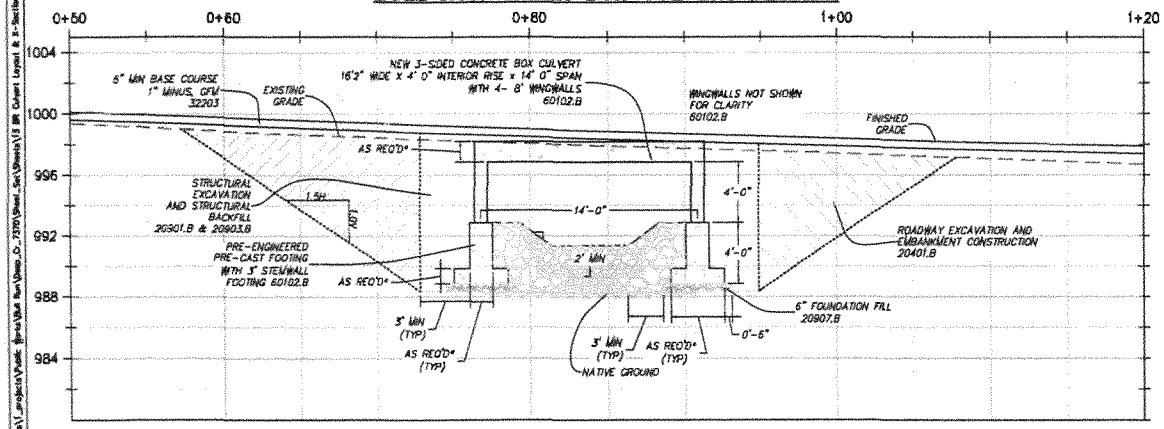

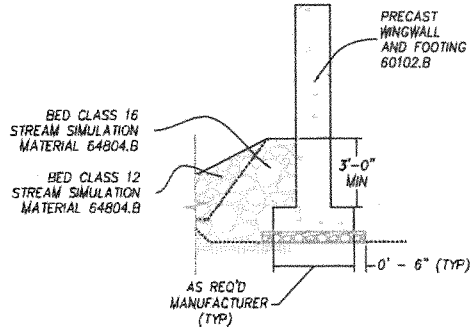

SECTION B–B

* AS REQUIRED BY APPROVED SHOP DRAWINGS AND CALCULATIONS
** REBAR PLACEMENT SHALL BE APPROVED BY CO IN WRITING PRIOR TO MANUFACTURE OF CULVERT, FOOTINGS, AND WINGWALLS

LOCATE WELDED CONNECTION PLATES IN THE FOLLOWING AREAS:
1. 2 PLATES AT EACH FOOTING JOINT LOCATED TO JOIN THE FOOTING STEMWALLS ON BOTH THE INSIDE AND OUTSIDE.
2. 1 PLATE AT EACH BRIDGE SECTION JOINT LOCATED TO JOIN THE OUTSIDE OF THE BRIDGE SECTION STEMWALLS

Bottom of Excavation Elevation

Point #	Measurement Location	Northing	Easting	Elevation
1	Mid Point of Footing @ SW Corner	5049.76	4988.98	988.33
2	Mid Point of Footing @ SE Corner	5046.72	5004.81	988.33
3	Mid Point of Footing @ NE Corner	5060.92	5005.12	988.33
4	Mid Point of Footing @ NW Corner	5063.95	4989.29	988.33

U.S. DEPARTMENT OF AGRICULTURE
FOREST SERVICE
R-6
PACIFIC NORTHWEST REGION

Forest: WALLOWA-WHITMAN NATIONAL FOREST
Project: 7370 Realignment and Culvert Replacements

Drawn: B. YAW
Design: B. YAW
Checked: D. TAYLOR
Reviewed: N. DRISKELL

Sheet Subset: BULL RUN CREEK CULVERT REPLACEMENT
Sheet Title: CULVERT LAYOUT & X-SECTION

Scale: NTS
Sheet Number: 13 OF 15

NWP-2014-86

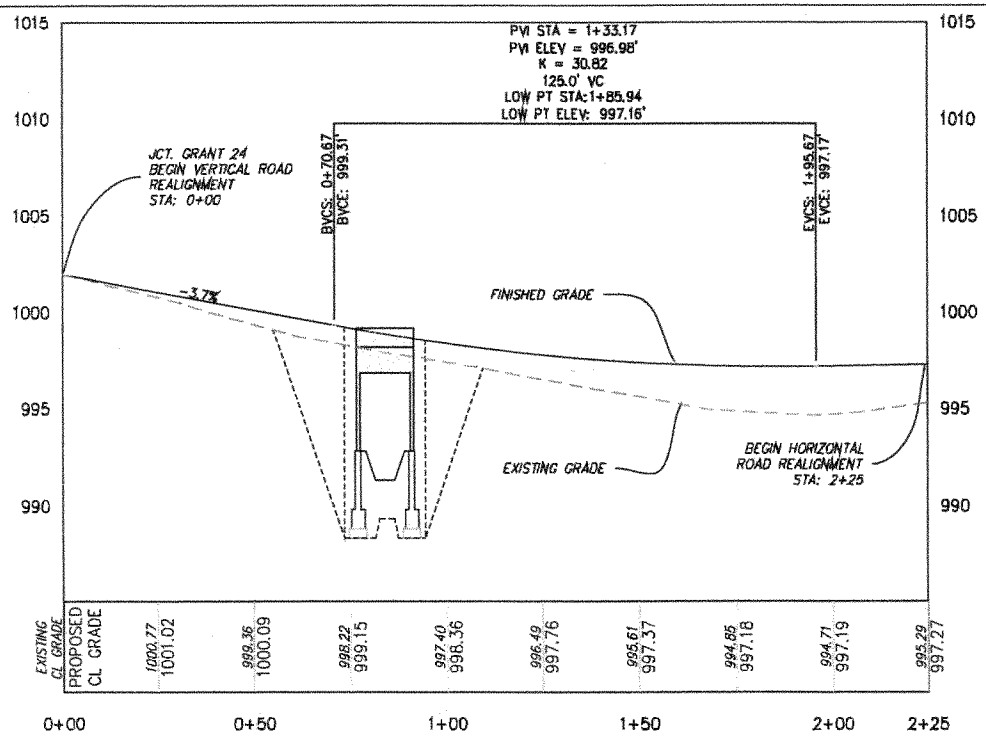

Profile View of RE-ALIGNED 7370
VERTICAL EXAGGERATION: 5

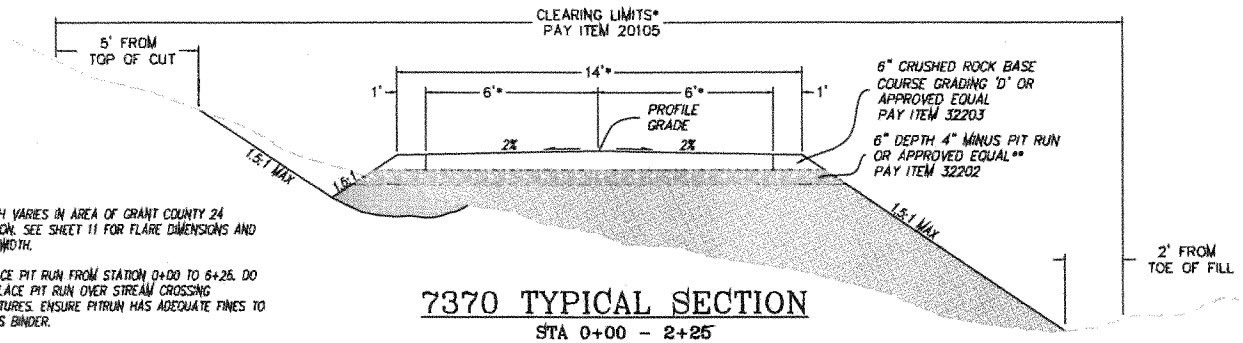

* WIDTH VARIES IN AREA OF GRANT COUNTY 24 JUNCTION. SEE SHEET 11 FOR FLARE DIMENSIONS AND ROAD WIDTH.

** PLACE PIT RUN FROM STATION 0+00 TO 6+26. DO NOT PLACE PIT RUN OVER STREAM CROSSING STRUCTURES. ENSURE PITRUN HAS ADEQUATE FINES TO ACT AS BINDER.

7370 TYPICAL SECTION

STA 0+00 - 2+25

U.S. DEPARTMENT OF AGRICULTURE
FOREST SERVICE
R-6
PACIFIC NORTHWEST REGION

Forest: WALLOWA-WHITMAN NATIONAL FOREST
Project: 7370 Realignment and Culvert Replacements

Drawn: B. YAW
Design: B. YAW
Checked: D. TAYLOR
Reviewed: N. DRISKELL

Sheet Subset: BULL RUN CREEK CULVERT REPLACEMENT
Sheet Title: CROSS SECTION & FSR 7370 TYPICAL

Scale: NTS
Sheet Number: 12 OF 15

NWP-2014-86

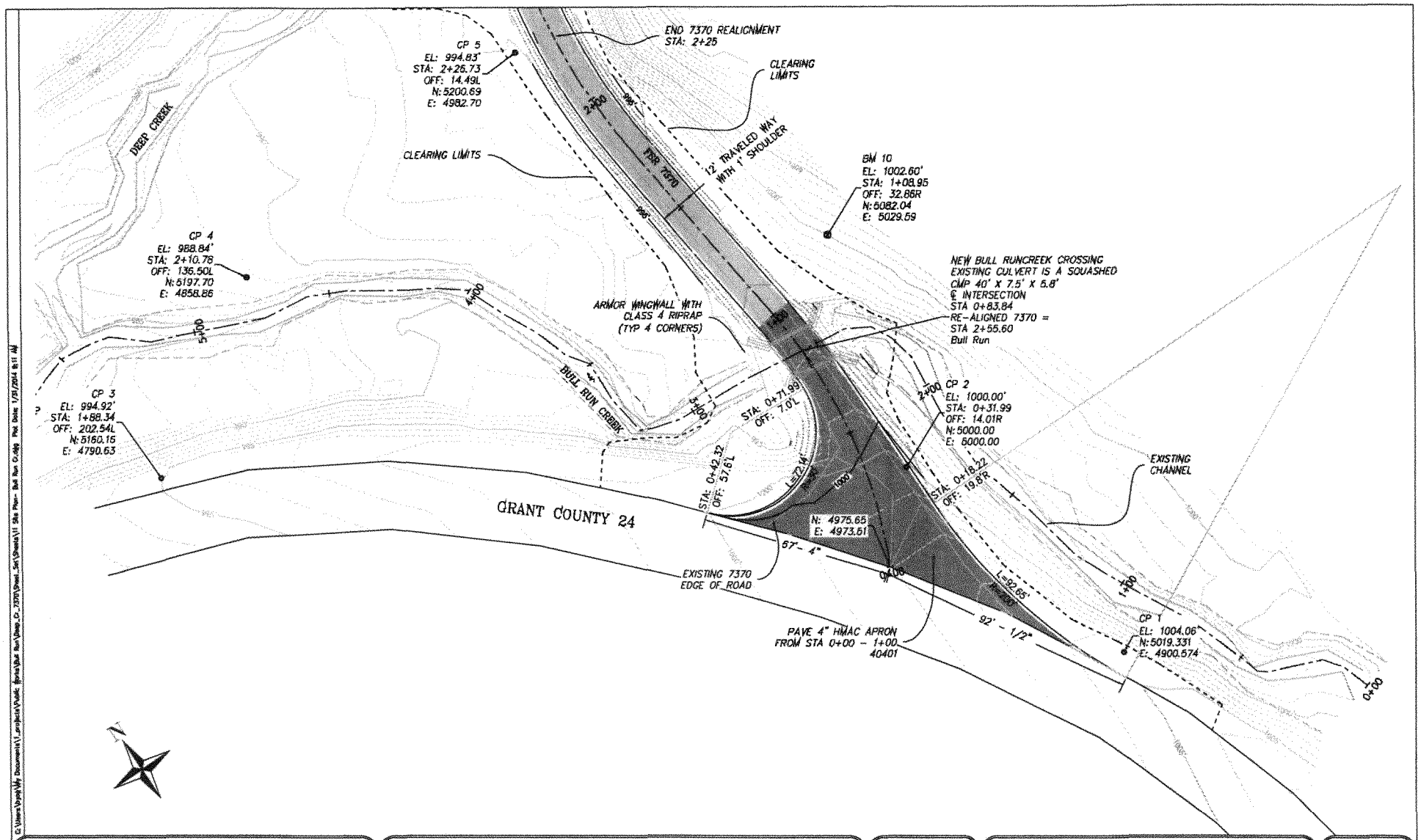

U.S. DEPARTMENT OF AGRICULTURE
FOREST SERVICE
R-6
PACIFIC NORTHWEST REGION

Forest: WALLOWA-WHITMAN NATIONAL FOREST

Project: 7370 Realignment and Culvert Replacements

Drawn: B. YAW
Design: B. YAW
Checked: D. TAYLOR
Reviewed: N. DRISKELL

Sheet Subset: BULL RUN CREEK CULVERT REPLACEMENT

Sheet Title: SITE AND GRADING PLAN

Scale: NTS

Sheet Number: 11 OF 15

NWP-2014-86

CULVERT LAYOUT

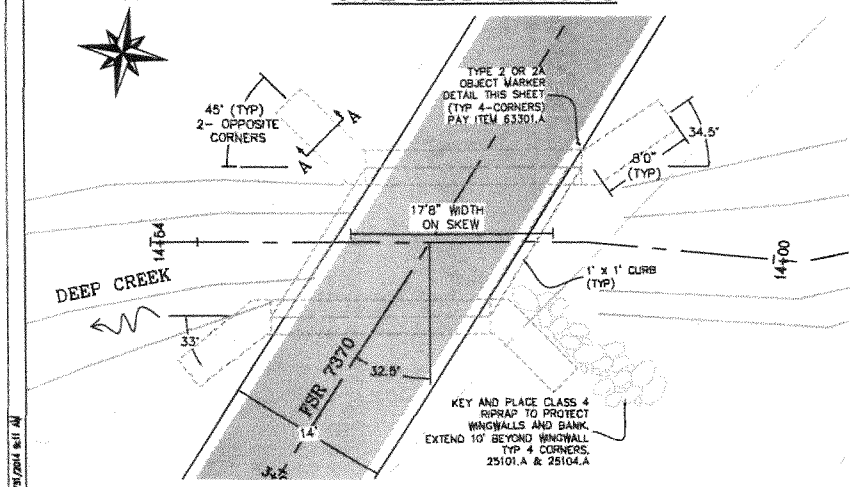

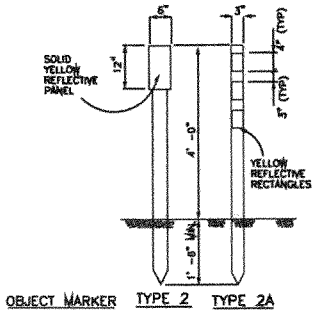

TYPE 2 – 4x4 TREATED TIMBER OR GALVANIZED STEEL POST ~ 1.1 LBS/FT

TYPE 2A – FLEXIBLE FIBERGLASS POST ("CARSONITE")

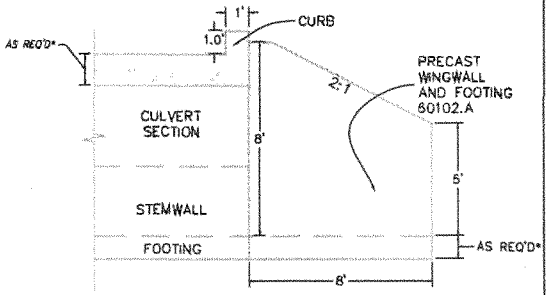

WINGWALL DETAIL

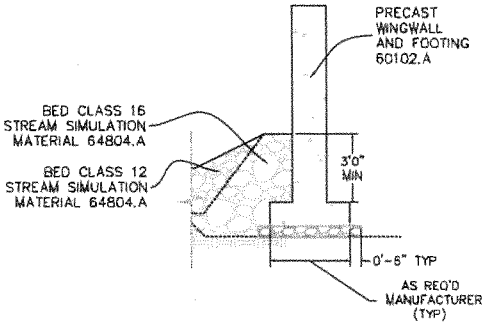

SECTION A–A

DEEP CREEK BOX CULVERT SECTION

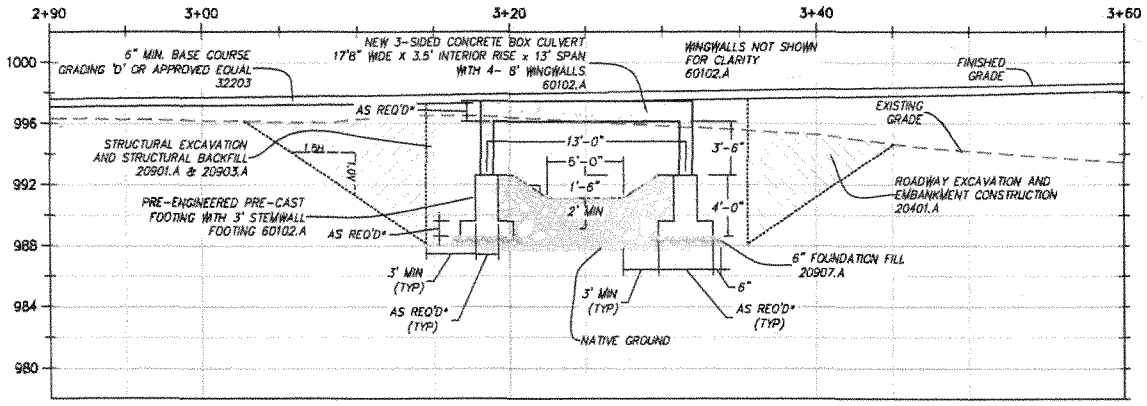

* AS REQUIRED BY APPROVED SHOP DRAWINGS AND CALCULATIONS
** REBAR PLACEMENT SHALL BE APPROVED BY CO IN WRITING PRIOR TO MANUFACTURE OF CULVERT, FOOTINGS, AND WINGWALLS

LOCATE WELDED CONNECTION PLATES IN THE FOLLOWING AREAS:
1. 2 PLATES AT EACH FOOTING JOINT LOCATED TO JOIN THE FOOTING STEMWALLS ON BOTH THE INSIDE AND OUTSIDE.
2. 1 PLATE AT EACH BRIDGE SECTION JOINT LOCATED TO JOIN THE OUTSIDE OF THE BRIDGE SECTION STEMWALLS

Bottom of Excavation Elevation

Point #	Measurement Location	Northing	Easting	Elevation
1	Mid Point of Footing @ SW Corner	5279.88	5016.22	988.10
2	Mid Point of Footing @ SE Corner	5253.07	5036.95	988.10
3	Mid Point of Footing @ NE Corner	5297.23	5042.64	988.10
4	Mid Point of Footing @ NW Corner	5294.06	5024.04	988.10

U.S. DEPARTMENT OF AGRICULTURE
FOREST SERVICE
R-6
PACIFIC NORTHWEST REGION

Forest: WALLOWA–WHITMAN NATIONAL FOREST
Project: 7370 Realignment and Culvert Replacements

Drawn: B. YAW
Design: B. YAW
Checked: D. TAYLOR
Reviewed: N. DRISKELL

Sheet Subset: DEEP CREEK CULVERT REPLACEMENT AND REALIGNMENTS
Sheet Title: CULVERT LAYOUT & X-SECTION

Scale: NTS
Sheet Number: 8 OF 15

NWP-2014-86

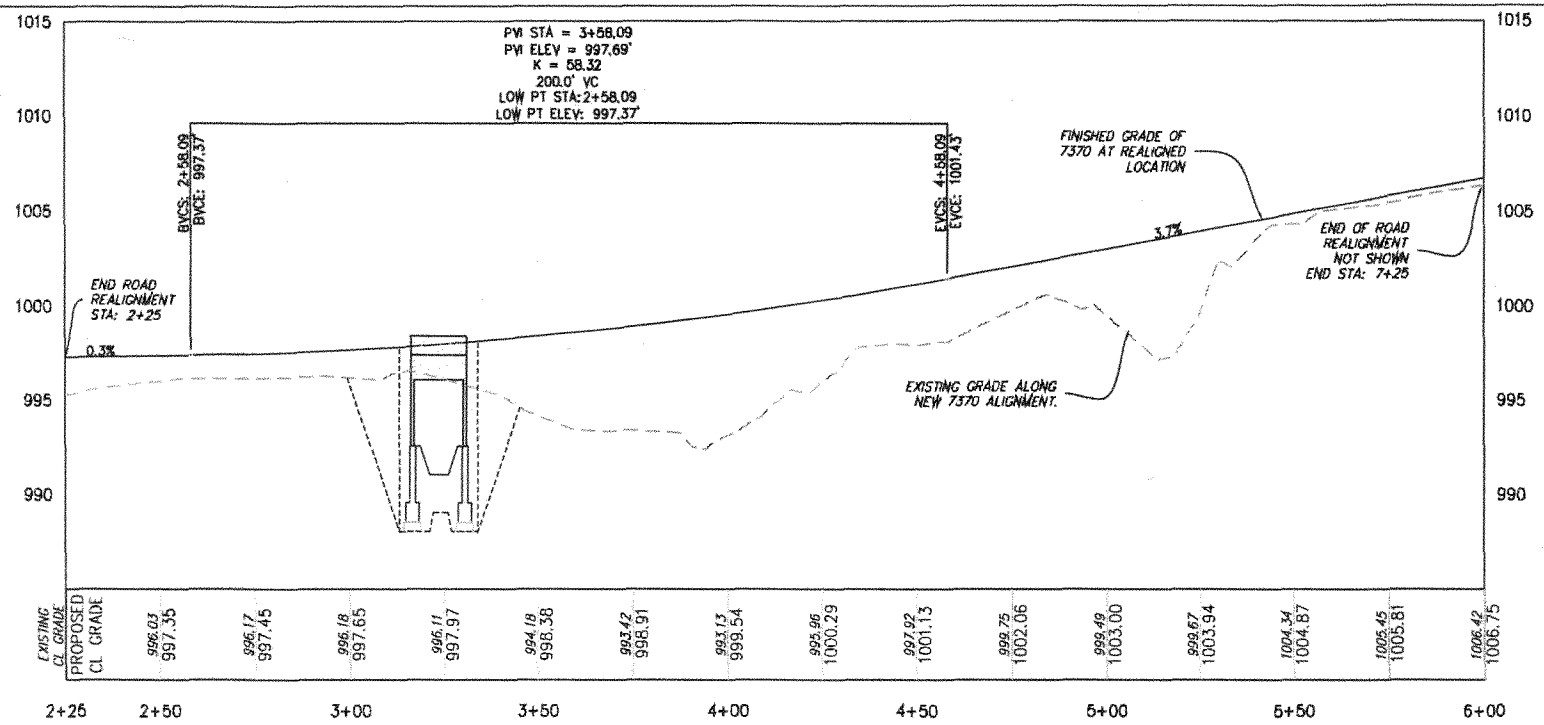

Profile View of RE-ALIGNED 7370
VERTICAL EXAGGERATION: 5

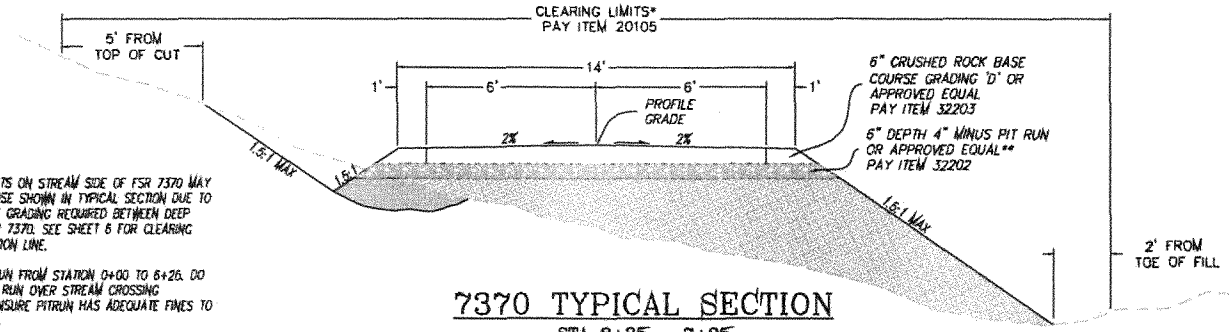

* CLEARING LIMITS ON STREAM SIDE OF FSR 7370 MAY VARY FROM THOSE SHOWN IN TYPICAL SECTION DUE TO THE AMOUNT OF GRADING REQUIRED BETWEEN DEEP CREEK AND FSR 7370. SEE SHEET 6 FOR CLEARING LIMITS DELINEATION LINE.

** PLACE PIT RUN FROM STATION 0+00 TO 6+26. DO NOT PLACE PIT RUN OVER STREAM CROSSING STRUCTURES. ENSURE PITRUN HAS ADEQUATE FINES TO ACT AS BINDER.

7370 TYPICAL SECTION

STA 2+25 – 7+25

U.S. DEPARTMENT OF AGRICULTURE
FOREST SERVICE
R-6
PACIFIC NORTHWEST REGION

Forest: WALLOWA-WHITMAN NATIONAL FOREST
Project: 7370 Realignment and Culvert Replacements

Drawn: B. YAW
Design: B. YAW
Checked: D. TAYLOR
Reviewed: N. DRISKELL

Sheet Subset: DEEP CREEK CULVERT REPLACEMENT AND REALIGNMENTS
Sheet Title: CROSS SECTION & FSR 7370 TYPICAL

Scale: NTS
Sheet Number: 7 OF 15

NWP-2014-86

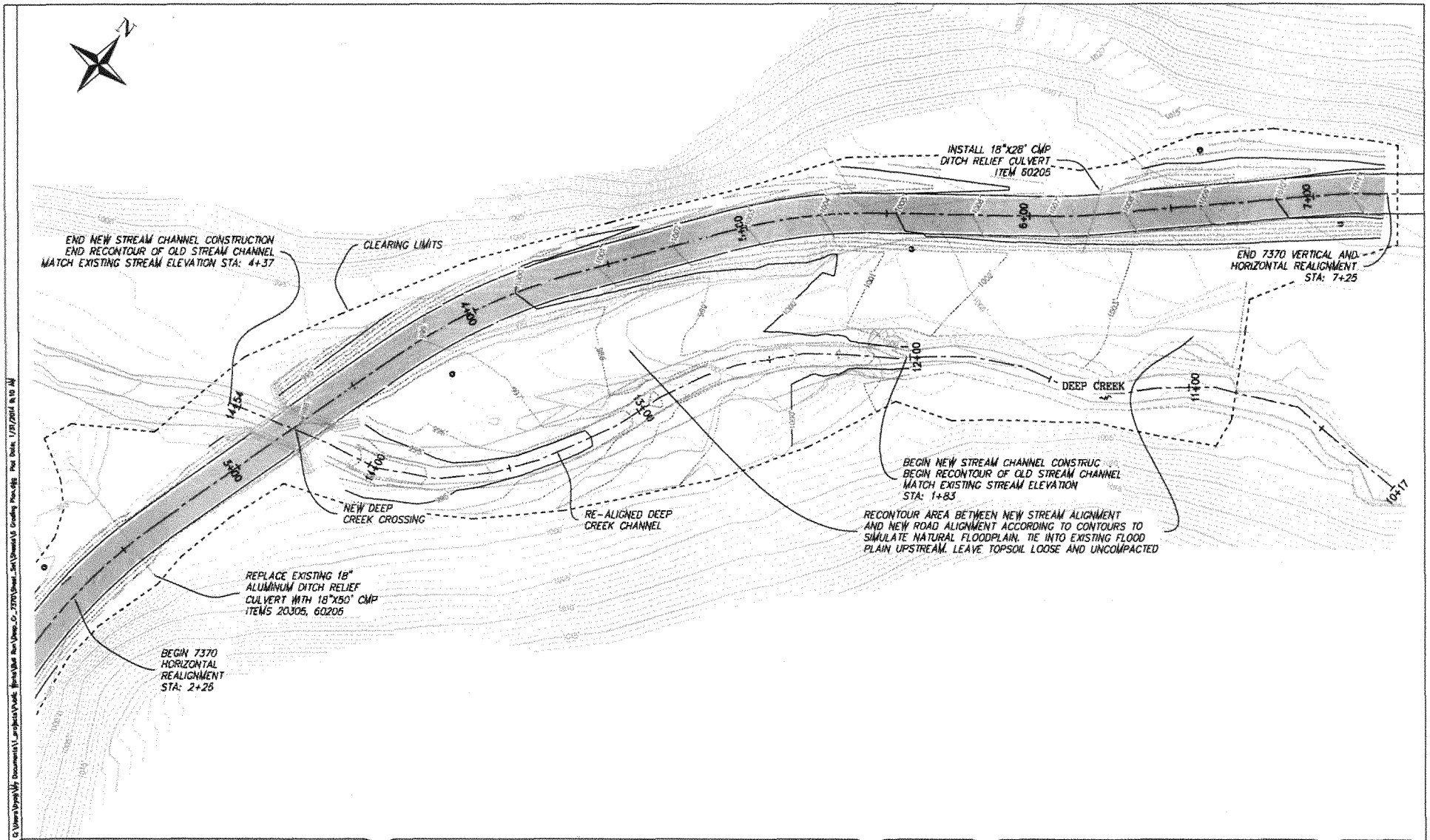

U.S. DEPARTMENT OF AGRICULTURE
FOREST SERVICE
R-6
PACIFIC NORTHWEST REGION

Forest: WALLOWA-WHITMAN NATIONAL FOREST

Project: 7370 Realignment and Culvert Replacements

Drawn: B. YAW
Designer: B. YAW
Checked: D. TAYLOR
Reviewed: N. DRISKELL

Sheet Subset: DEEP CREEK CULVERT REPLACEMENT AND REALIGNMENTS

Sheet Title: GRADING PLAN

Scale: NTS

Sheet Number: 6 OF 15

NWP-2014-86

VICINITY MAP

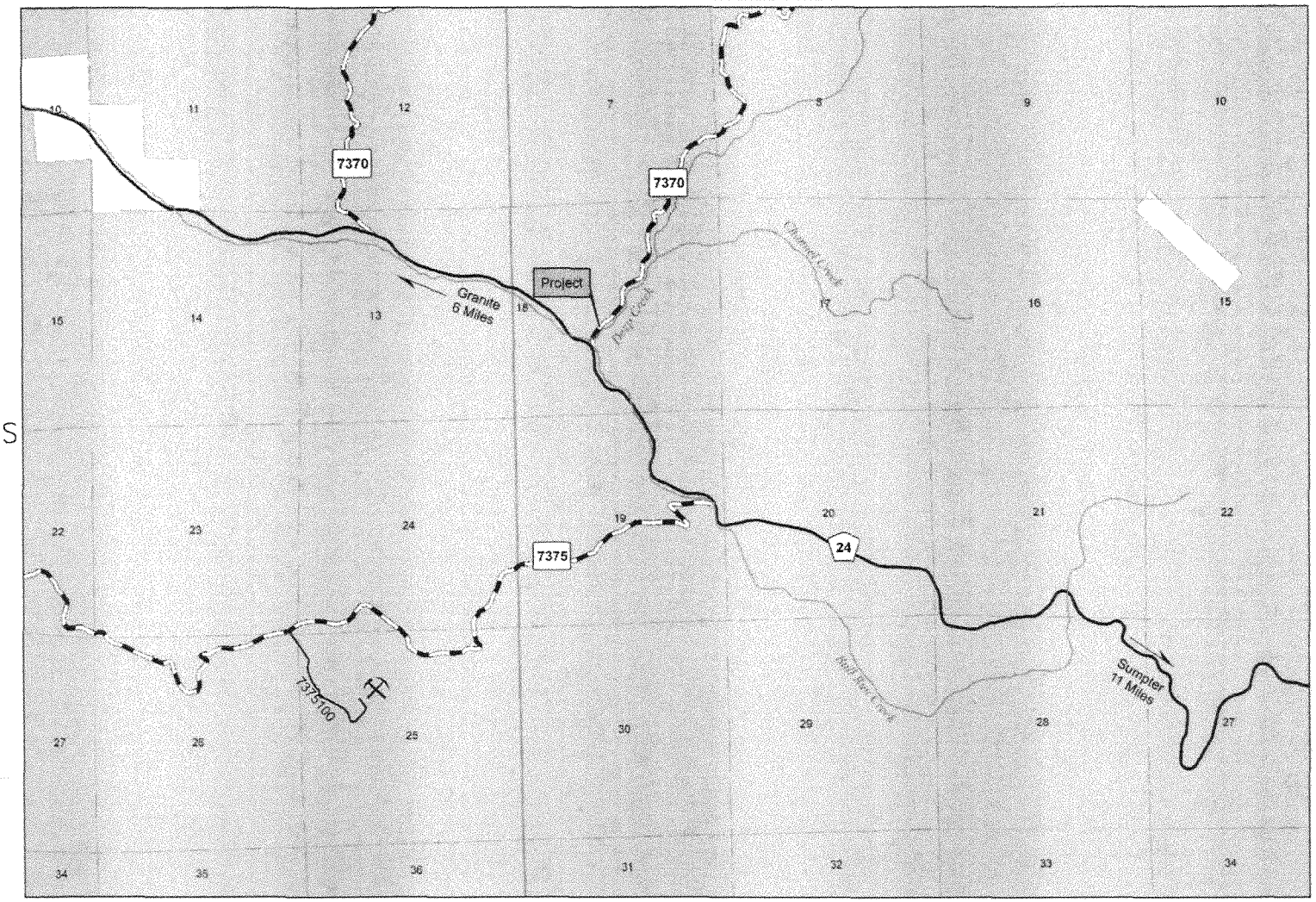

LEGEND

MATERIAL SOURCE

WATER SOURCE

U.S. DEPARTMENT OF AGRICULTURE
FOREST SERVICE
R-6
PACIFIC NORTHWEST REGION

Forest: WALLOWA-WHITMAN NATIONAL FOREST

Project: 7370 Realignment and Culvert Replacements

Drawn: S. YAW
Design: S. YAW
Checked: D. TAYLOR
Reviewed: N. DRISKELL

Sheet Title: VICINITY MAP

Scale: NTS

Sheet Number: 2 OF 15

NWP-2014-86