USGS Topography Map: NWP-2014-424, Spires, Oliver (Crooked Crk)

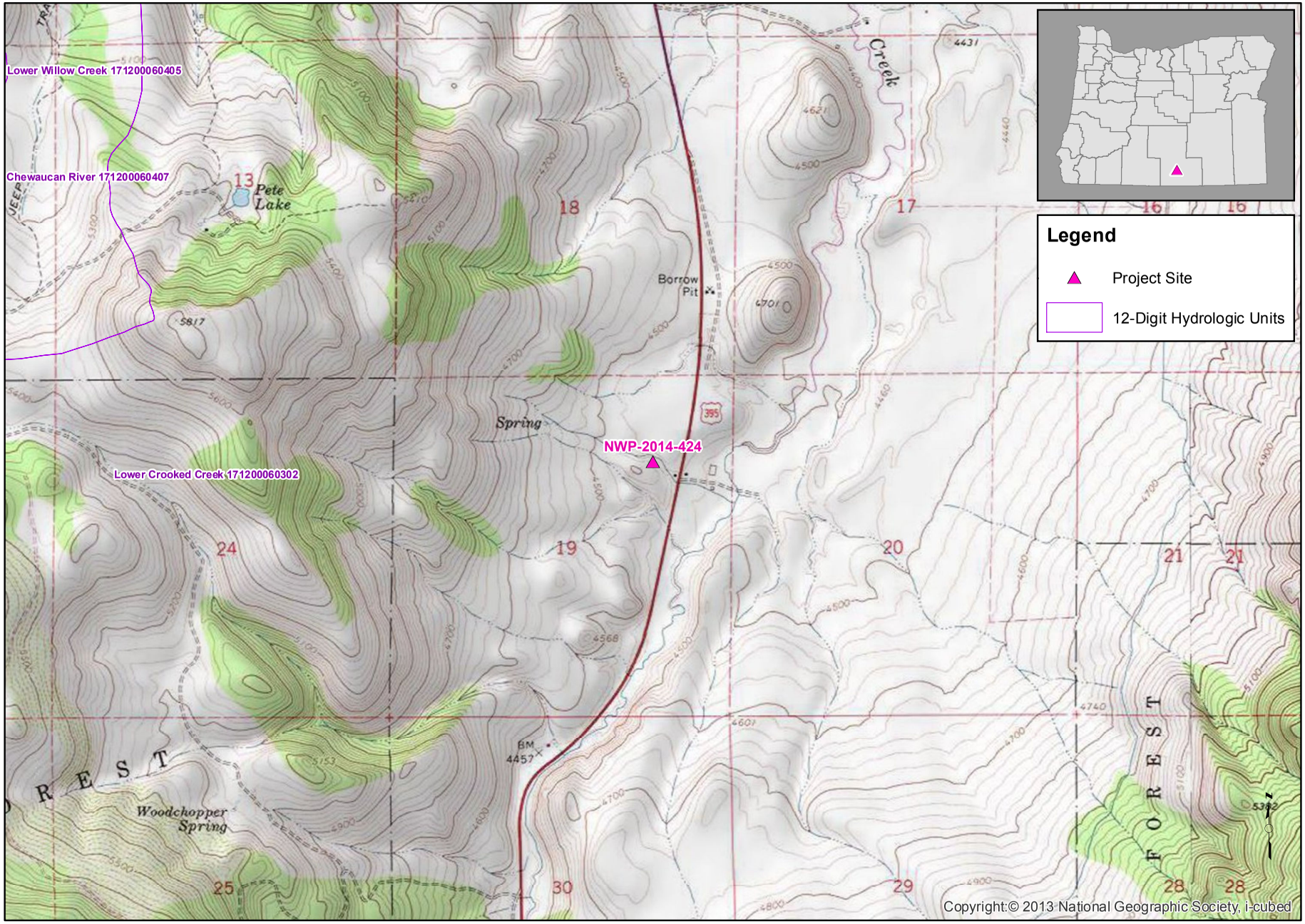

0 0.25 0.5 1 Miles

Scale: 1:24,000

Latitude: 42.4369 Longitude: -120.2820
City: Lakeview County: Lake
PLSS: Section 19, Township 36.0S, Range 21.0E
HUC12: Lower Crooked Creek (171200060302)

Date: 2/4/2015
US Army Corps of Engineers, Portland District
Projection: Oregon State Plane South (NAD 83)

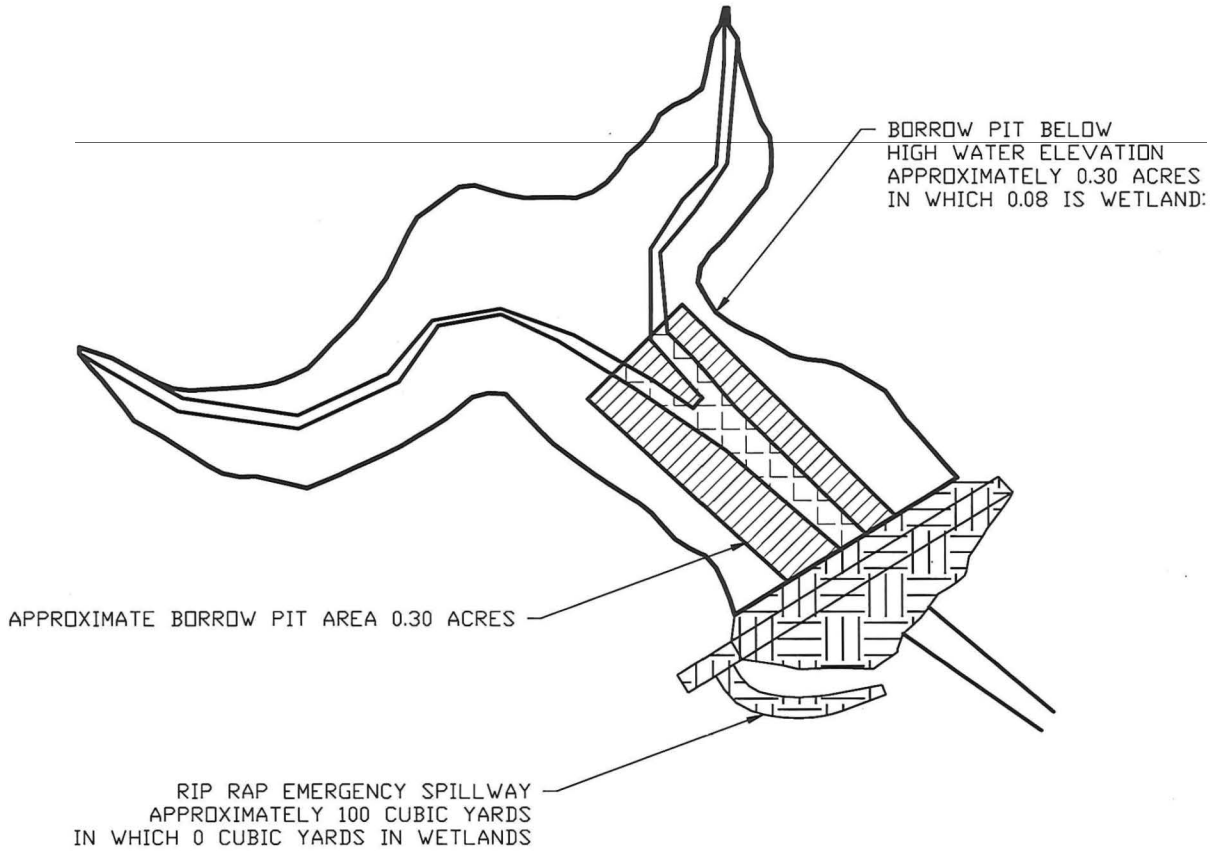

WETLANDS IN BORROW PIT

SCALE: 1" = 100'

DRAWING NO. 1 OF 1

DATE : 1/2015

SCALE : N.T.S.

WETLAND AREA
CHANDLER STATION DAM
LAKEVIEW OREGON

ANDERSON ENGINEERING AND SURVEYING, INC.
P.O. BOX 28
LAKEVIEW, OREGON 97630
(541) 947-4407 FAX: 947-2321
www.andersonengineering.com

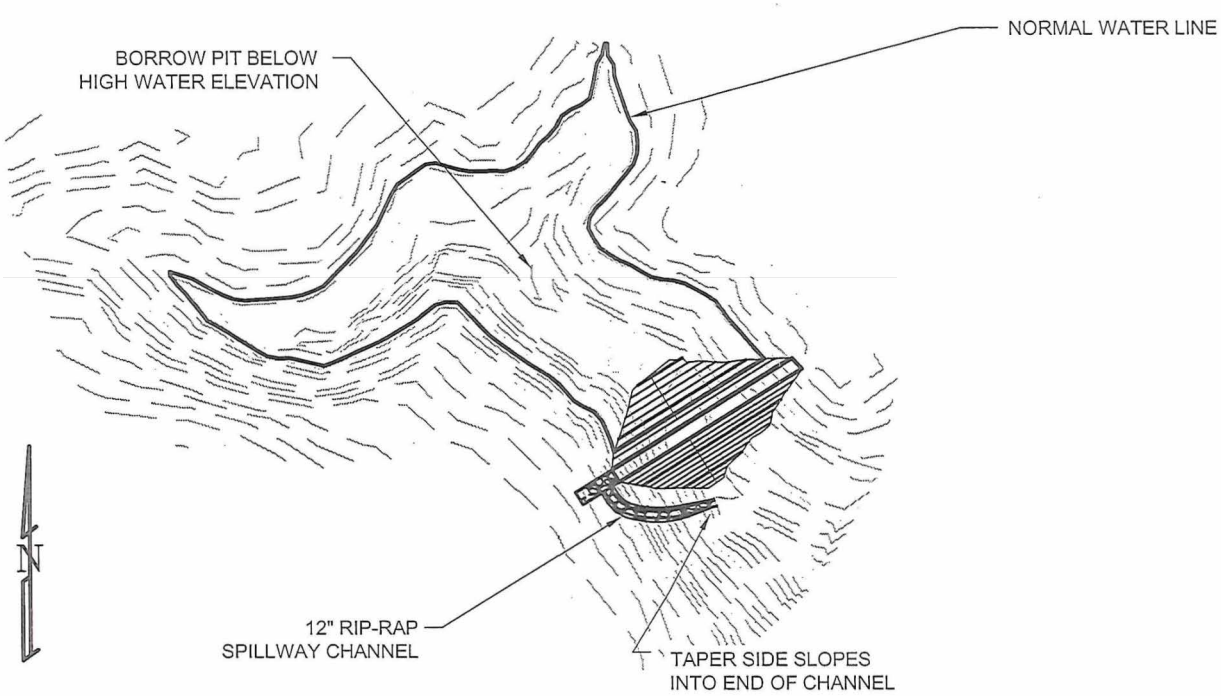

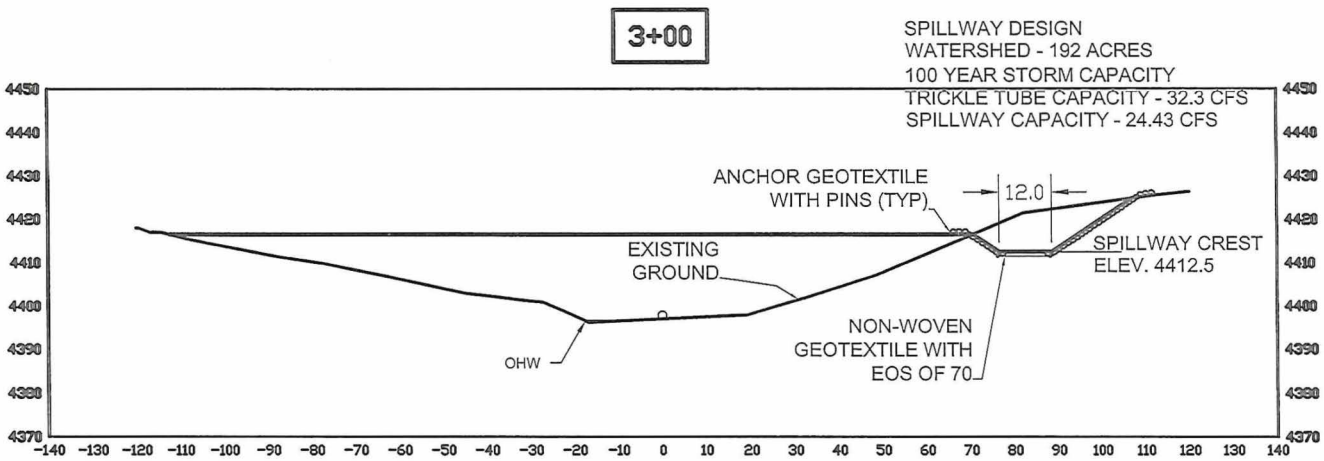

DRAWING NO. 1 of 5

DATE : 9/2014

SCALE : N.T.S.

PLAN AND SECTION
CHANDLER STATION DAM
LAKEVIEW OREGON

ANDERSON ENGINEERING
AND SURVEYING, INC.
P.O. BOX 28
LAKEVIEW, OREGON 97630
(541) 947-4407 FAX: 947-2321
www.andersonengineering.com

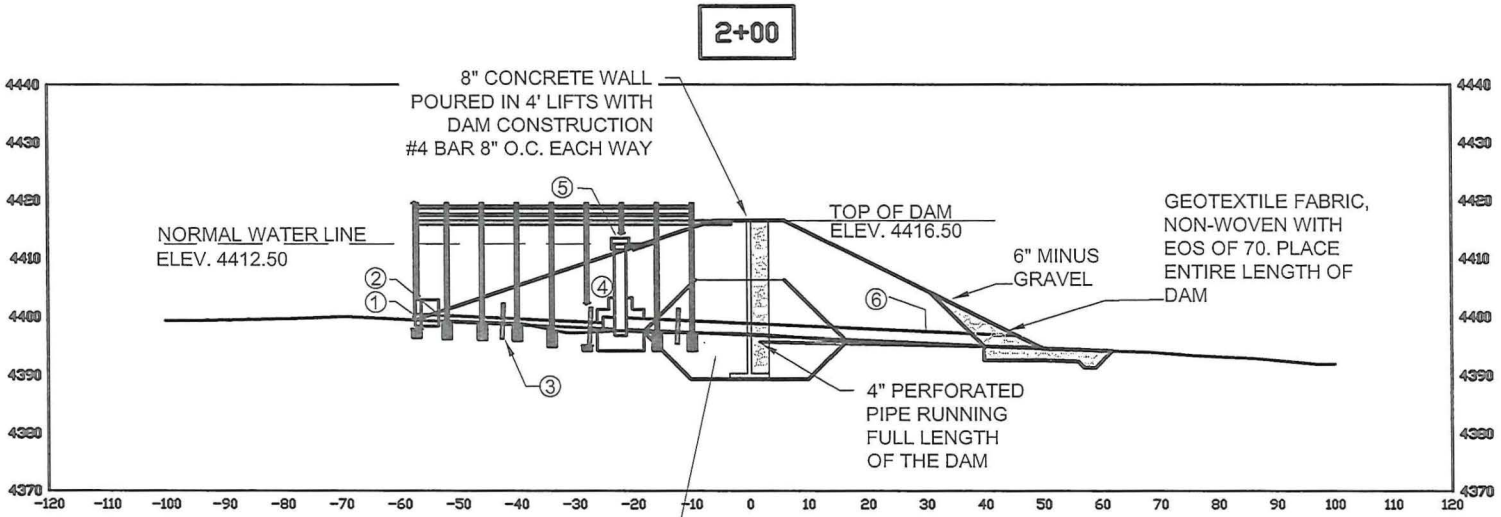

CORE TRENCH-NATIVE BACKFILL TO BE TREATED WITH BENTONITE, 15% BY WEIGHT, CONSTRUCT CORE TRENCH ENTIRE LENGTH OF DAM. THOROUGHLY MIX BENTONITE WITH SOIL, PLACE IN 8" LIFTS IN CORE AREA. COMPACT TO 95% MAX DENSITY WITH 2% OF OPTIMUM MOISTURE

① WATERMAN C-10 8"Ø CANAL GATE

② 8"Ø HDPE DOUBLE WALLED PIPE

③ 8" THICK CONCRETE ANTI-SEEPAGE COLLAR WITH MAT OF #4 BARS AT 8" O.C. EACH WAY

④ FABRICATED TEE WITH BANDS EMBEDDED INTO CONCRETE. SEE DETAIL

⑤ ANTI-VORTEX SCREENED OVERFLOW CONSTRUCTED OUT OF 36"Ø CMP. BRACE TO FACE OF DAM WITH ANGLE IRON 3X3X5/16 EACH SIDE. SEE DETAIL

⑥ 24"Ø HDPE DOUBLE WALLED PIPE

DAM CROSS-SECTION @ STA 2+00

SCALE:1"=30' HORIZ

1"=30' VERT

DRAWING NO. 2 of 5

DATE : 9/2014

SCALE : N.T.S.

DAM SECTION
CHANDLER STATION DAM
LAKEVIEW OREGON

ANDERSON ENGINEERING AND SURVEYING, INC.
P.O. BOX 28
LAKEVIEW, OREGON 97630
(541) 947-4407 FAX: 947-2321
www.andersonengineering.com

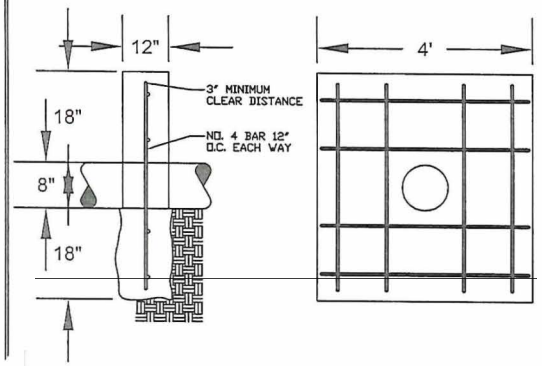

ANTI-SEEPAGE COLLAR

SCALE: NONE

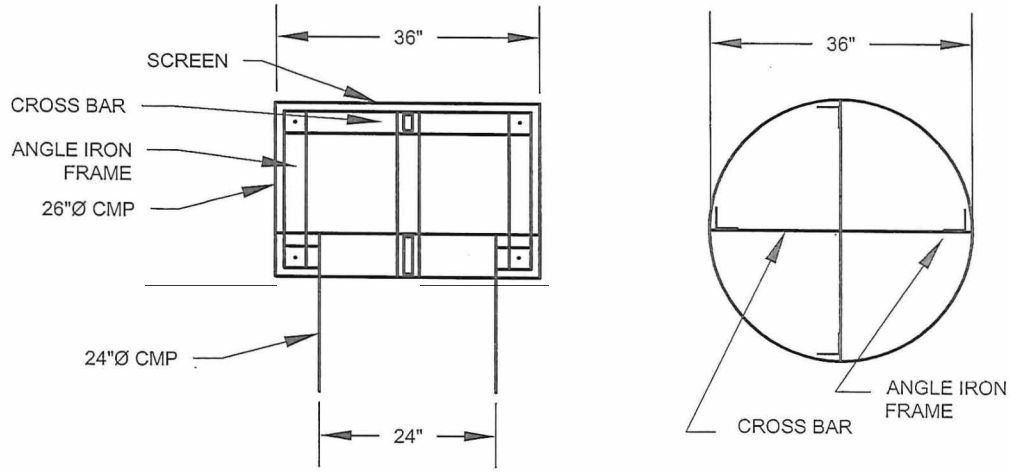

ANTI-VORTEX SCREENED OVERFLOW

SCALE:N.T.S.

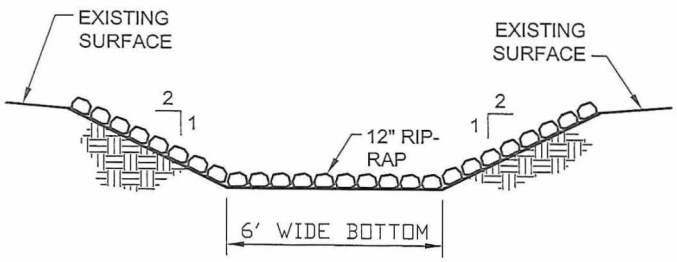

SPILLWAY CHANNEL

SCALE: NONE

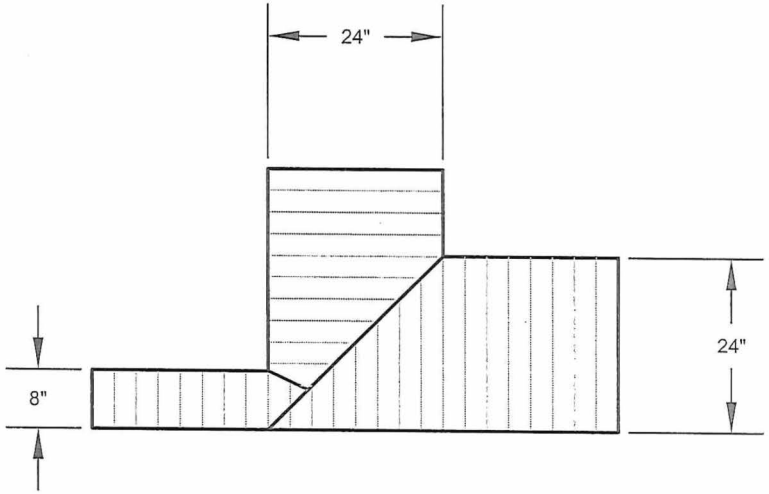

FABRICATED TEE

SCALE:N.T.S.

DRAWING NO. 3 of 5

DATE : 9/2014

SCALE : N.T.S.

DETAILS
CHANDLER STATION DAM
LAKEVIEW OREGON

ANDERSON ENGINEERING AND SURVEYING, INC.
P.O. BOX 28
LAKEVIEW, OREGON 97630
(541) 947-4407 FAX: 947-2321
www.andersonengineering.com

ANDERSON ENGINEERING
AND SURVEYING, INC.
P.O. BOX 28
LAKEVIEW, OREGON 97630
(541) 947-4407 FAX: 947-2321
www.andersonengineering.com

SITE LOCATION
CHANDLER STATION DAM
LAKEVIEW OREGON

DATE : 9/2014	DRAWING NO. 4 of 5
SCALE : N.T.S.	

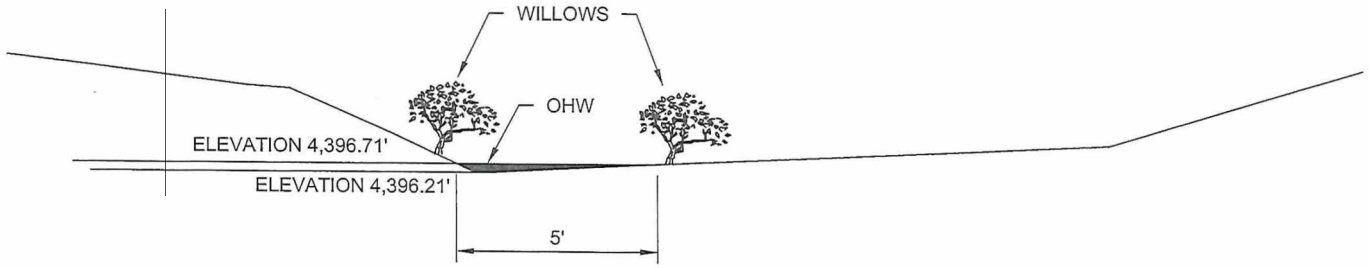

EXISTING STREAM SECTION AT DAM LOCATION

SCALE: 1" = 10' VERTICAL, 1" = 20' HORIZONTAL

DRAWING NO. 5 of 5

DATE : 9/2014

SCALE : N.T.S.

EXISTING SECTION
CHANDLER STATION DAM
LAKEVIEW OREGON

ANDERSON ENGINEERING AND SURVEYING, INC.
P.O. BOX 28
LAKEVIEW, OREGON 97630
(541) 947-4407 FAX: 947-2321
www.andersonengineering.com