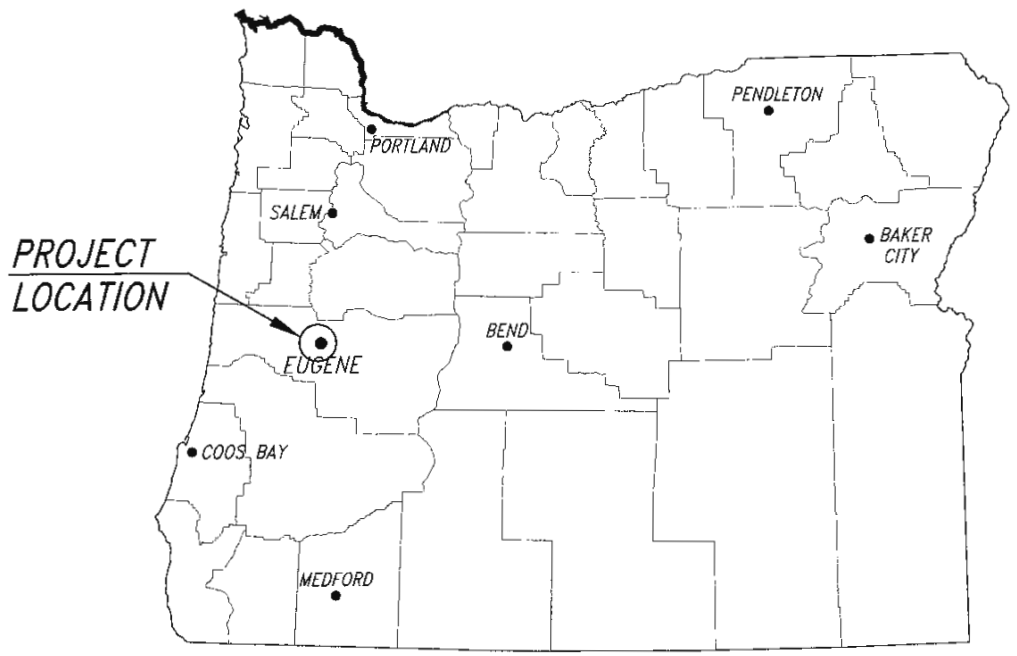

LOCATION MAP

NOT TO SCALE

GEOGRAPHIC LOCATION

TOWNSHIP 17 SOUTH, RANGE 5 WEST, SECTION 5,
WILLAMETTE MERIDIAN, LANE COUNTY, OREGON
LATITUDE 44°07'06.1" NORTH, LONGITUDE 123°18'54.9" WEST
USGS QUAD MAP: VENETA, OREG.

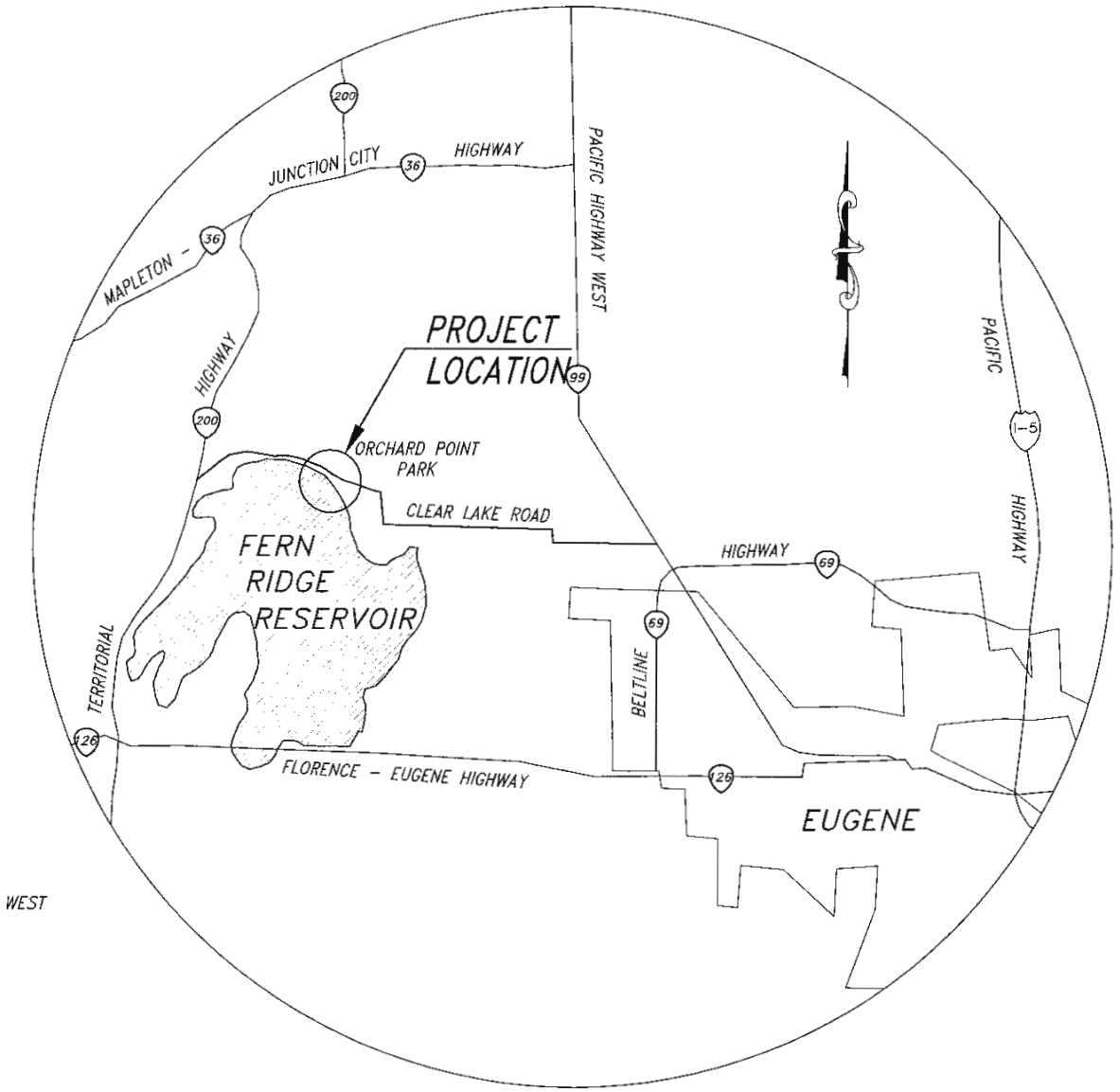

VICINITY MAP

0 2 4
SCALE IN MILES

DRAWING INDEX

01. TITLE SHEET
02. EXISTING SITE & DEMOLITION PLAN
03. PROPOSED SITE PLAN
04. DOCK AND ABUTMENT PLAN & PROFILE
05. CAST-IN-PLACE PIER DETAILS
06. CAST-IN-PLACE ABUTMENT DETAILS
07. SEWAGE TANK DETAILS
08. GENERAL UTILITY SCHEMATICS
09. BOARDING FLOAT PLAN & ELEVATION
10. BOARDING FLOAT W/ PILE POCKET PLAN & ELEVATION
11. BOARDING FLOAT HINGE DETAILS
12. FLOAT LAYOUT & HINGE BACKING PLATE DETAILS
13. INTERNAL PILE HOOP DETAILS
14. BOARDING FLOAT UTILITY DETAILS

BOATING FACILITY IMPROVEMENTS
AT ORCHARD POINT PARK ON FERN RIDGE RESERVOIR FOR LANE COUNTY PARKS

AS ADVERTISED

DATE	REVISIONS	BY

FILE PATH: J:\Cad\2D Projects\493 - Orchard Point\Drawings
FILE NAME: 01 - Title Sheet.dwg

APPROVED BY: PARKS FACILITIES MANAGER
CHECKED BY: S. JANTZE
DESIGNED BY: S. JANTZE — DATE: 23 APRIL 2014
DRAWN BY: DATE

REGISTERED PROFESSIONAL ENGINEER — OREGON — RAYMOND C. BEYERS

OREGON STATE MARINE BOARD

TITLE SHEET
AT ORCHARD POINT PARK ON FERN RIDGE RESERVOIR
FOR LANE COUNTY PARKS

OREGON STATE MARINE BOARD

01 SHEET OF 14
2010 - 1493 - 01
DRAWING NO.

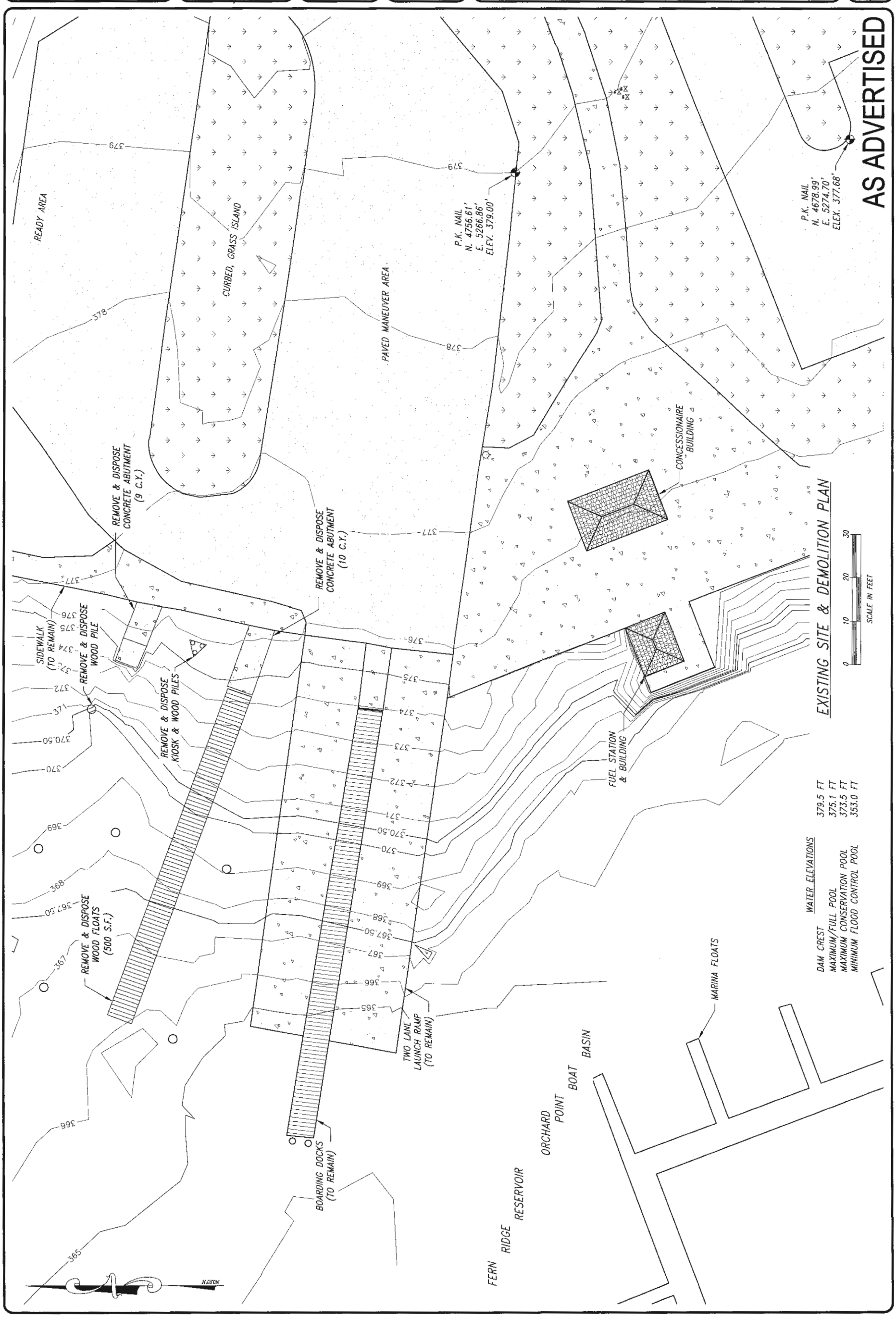
AS ADVERTISED
EXISTING SITE & DEMOLITION PLAN
SCALE IN FEET
0 10 20 30
READY AREA
CURBED, GRASS ISLAND
PAVED MANEUVER AREA
P.K. NAIL
N. 4756.61'
E. 5266.86'
ELEV. 379.00'
P.K. NAIL
N. 4678.99'
E. 5274.70'
ELEV. 377.68'
CONCESSIONAIRE BUILDING
REMOVE & DISPOSE CONCRETE ABUTMENT (9 C.Y.)
REMOVE & DISPOSE CONCRETE ABUTMENT (10 C.Y.)
SIDEWALK (TO REMAIN)
REMOVE & DISPOSE WOOD PILE
REMOVE & DISPOSE KIOSK & WOOD PILES
FUEL STATION & BUILDING
REMOVE & DISPOSE WOOD FLOATS (500 S.F.)
TWO LANE LAUNCH RAMP (TO REMAIN)
BOARDING DOCKS (TO REMAIN)
MARINA FLOATS
FERN RIDGE RESERVOIR
ORCHARD POINT BOAT BASIN
NORTH
WATER ELEVATIONS
DAM CREST 379.5 FT
MAXIMUM/FULL POOL 375.1 FT
MAXIMUM CONSERVATION POOL 373.5 FT
MINIMUM FLOOD CONTROL POOL 353.0 FT
OREGON STATE MARINE BOARD
EXISTING SITE & DEMOLITION PLAN
AT ORCHARD POINT PARK ON FERN RIDGE RESERVOIR
FOR LANE COUNTY PARKS
02 SHEET
14 OF
2010 - 1493 - 02 DRAWING NO.
S. JANTZE
23 APRIL 2014
DATE
DATE
REVISIONS
BY

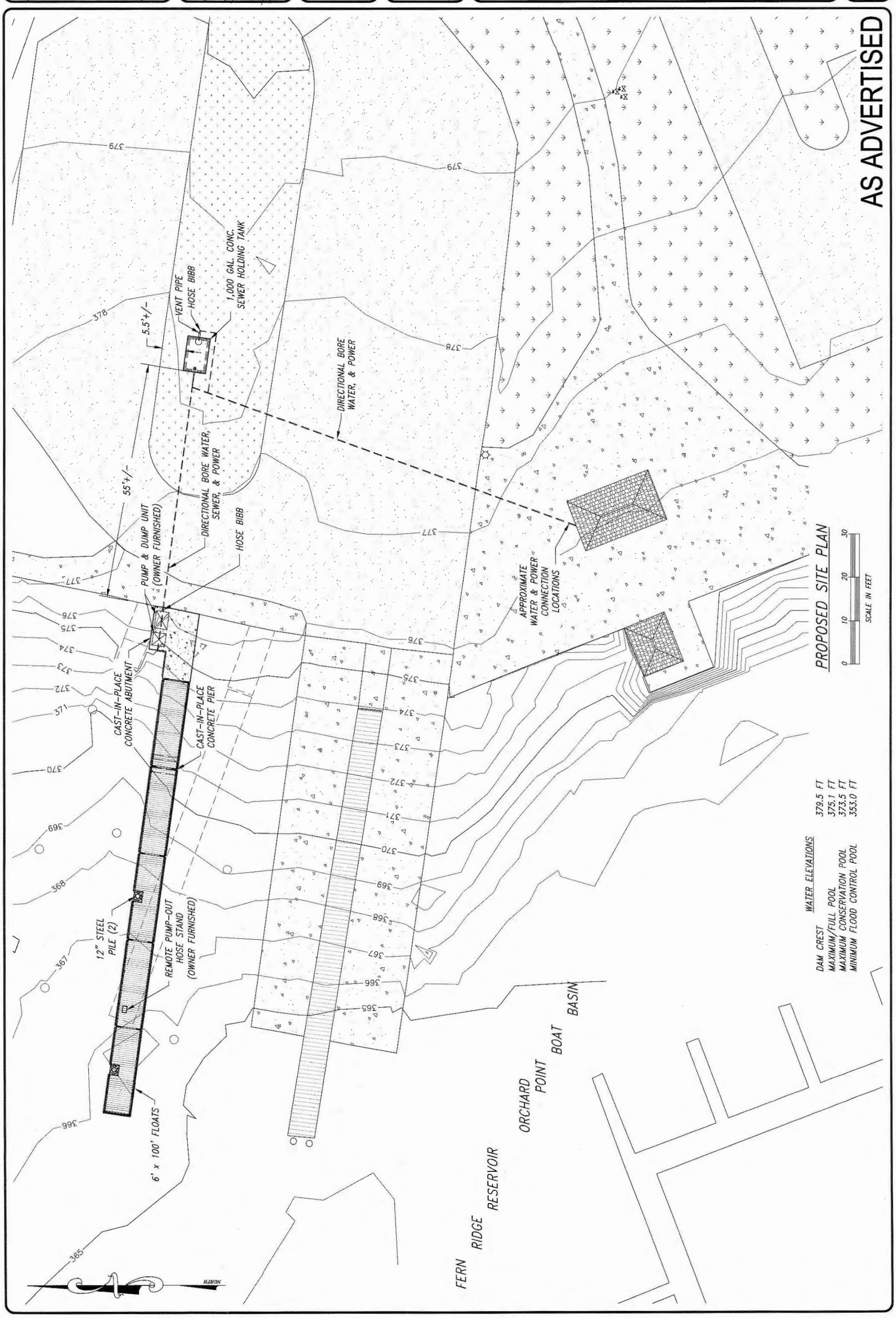
AS ADVERTISED
PROPOSED SITE PLAN
SCALE IN FEET
0 10 20 30
WATER ELEVATIONS
DAM CREST 379.5 FT
MAXIMUM/FULL POOL 375.1 FT
MAXIMUM CONSERVATION POOL 373.5 FT
MINIMUM FLOOD CONTROL POOL 353.0 FT
1,000 GAL. CONC. SEWER HOLDING TANK
VENT PIPE
HOSE BIBB
5.5'+/-
55'+/-
DIRECTIONAL BORE WATER, SEWER, & POWER
DIRECTIONAL BORE WATER, & POWER
PUMP & DUMP UNIT (OWNER FURNISHED)
HOSE BIBB
APPROXIMATE WATER & POWER CONNECTION LOCATIONS
CAST-IN-PLACE CONCRETE ABUTMENT
CAST-IN-PLACE CONCRETE PIER
12" STEEL PILE (2)
REMOTE PUMP-OUT HOSE STAND (OWNER FURNISHED)
6' x 100' FLOATS
FERN RIDGE RESERVOIR
ORCHARD POINT BOAT BASIN
NORTH
OREGON STATE MARINE BOARD
PROPOSED SITE PLAN
AT ORCHARD POINT PARK ON FERN RIDGE RESERVOIR
FOR LANE COUNTY PARKS
03 SHEET
14 OF
2010 - 1493 - 03 DRAWING NO.
OREGON STATE MARINE BOARD
REGISTERED PROFESSIONAL ENGINEER
RAYMOND G. LAHAM
OREGON
JULY 19, 1994
EXPIRES DECEMBER 31, 2014
ENGINEER
S. JANTZE
DESIGNED BY
S. JANTZE
DRAWN BY
23 APRIL 2014
DATE
APPROVED: BOATING FACILITIES MANAGER
FINAL CHECK BY
DATE
REVISIONS
BY
FILE PATH J:\Old 3D Projects\1493 - Orchard Point\Drawings\
FILE NAME 03 - Proposed Site Plan.dwg

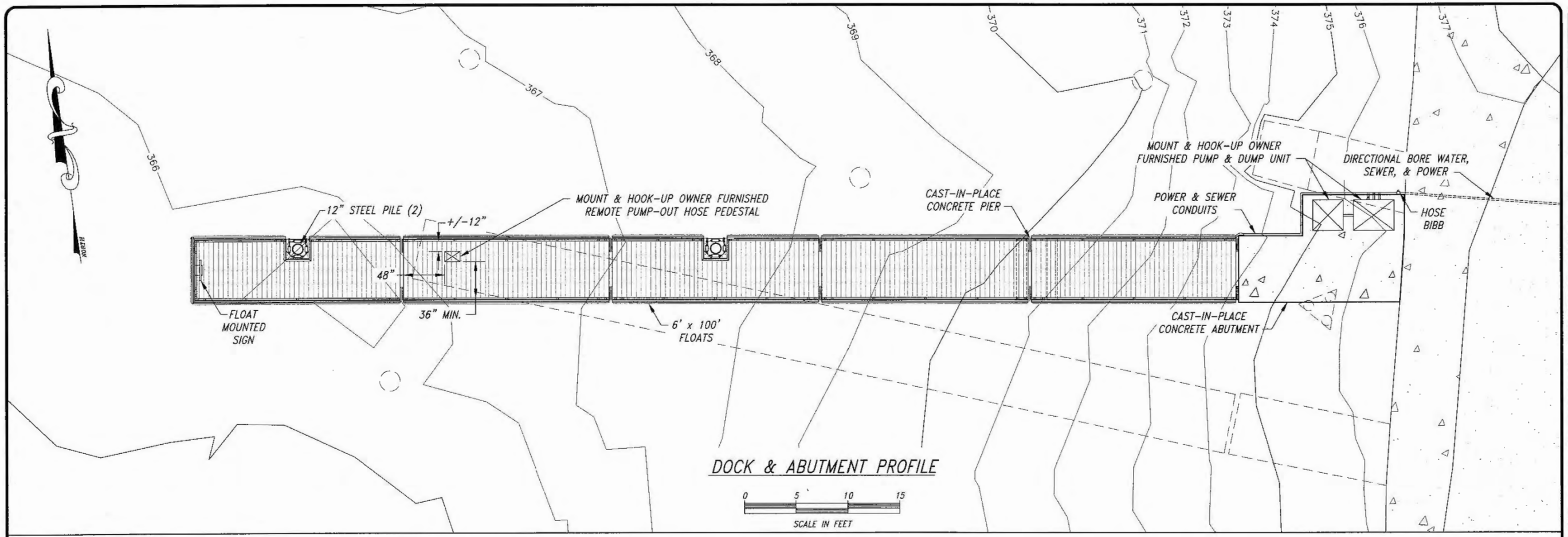

DOCK & ABUTMENT PROFILE

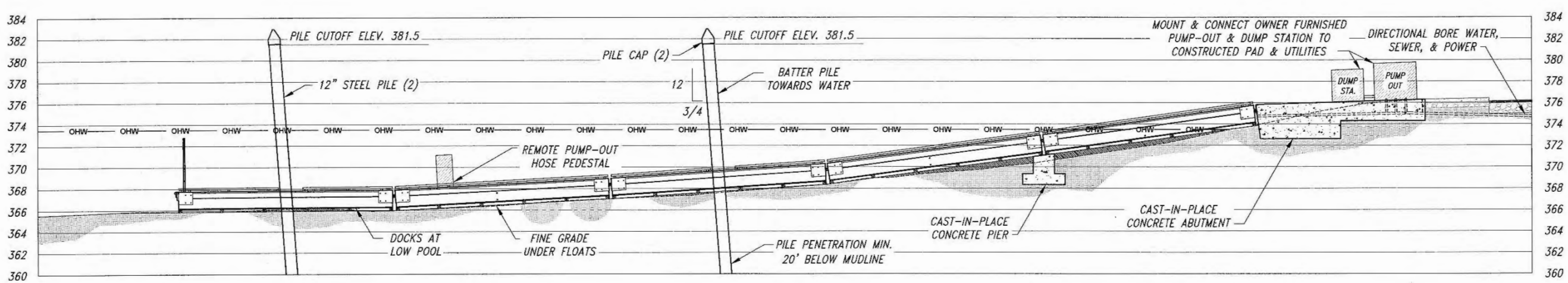

NOTES:

- CONSTRUCTION WILL TAKE PLACE IN THE DRY AT LOW POOL.
- FINELY GRADE UNDER FLOATS FOR UNIFORM SUPPORT.
- PUMP-OUT & DUMP STATION EQUIPMENT IS OWNER FURNISHED

DOCK & ABUTMENT PROFILE

0 5 10 15

SCALE IN FEET

AS ADVERTISED

DATE	REVISIONS	BY

FILE PATH: J:\Civil 3D Projects\1493 - Orchard Point\Drawings\
FILE NAME: 04 - Plan & Profile.dwg

APPROVED BY: FOR OSMB FACILITIES MANAGER

FINAL CHECK BY

DESIGNED BY: S. JANTZE

DRAWN BY: S. JANTZE

DATE: 23 APRIL 2014

REGISTERED PROFESSIONAL ENGINEER — RAYMOND G. LAMAYA — OREGON — JULY 19, 1989

OREGON STATE MARINE BOARD

DOCK AND ABUTMENT PLAN & PROFILE
AT ORCHARD POINT PARK ON FERN RIDGE RESERVOIR
FOR LANE COUNTY PARKS

OREGON STATE MARINE BOARD

SHEET 04 OF 14

DRAWING NO. 2010 - 1493 - 04

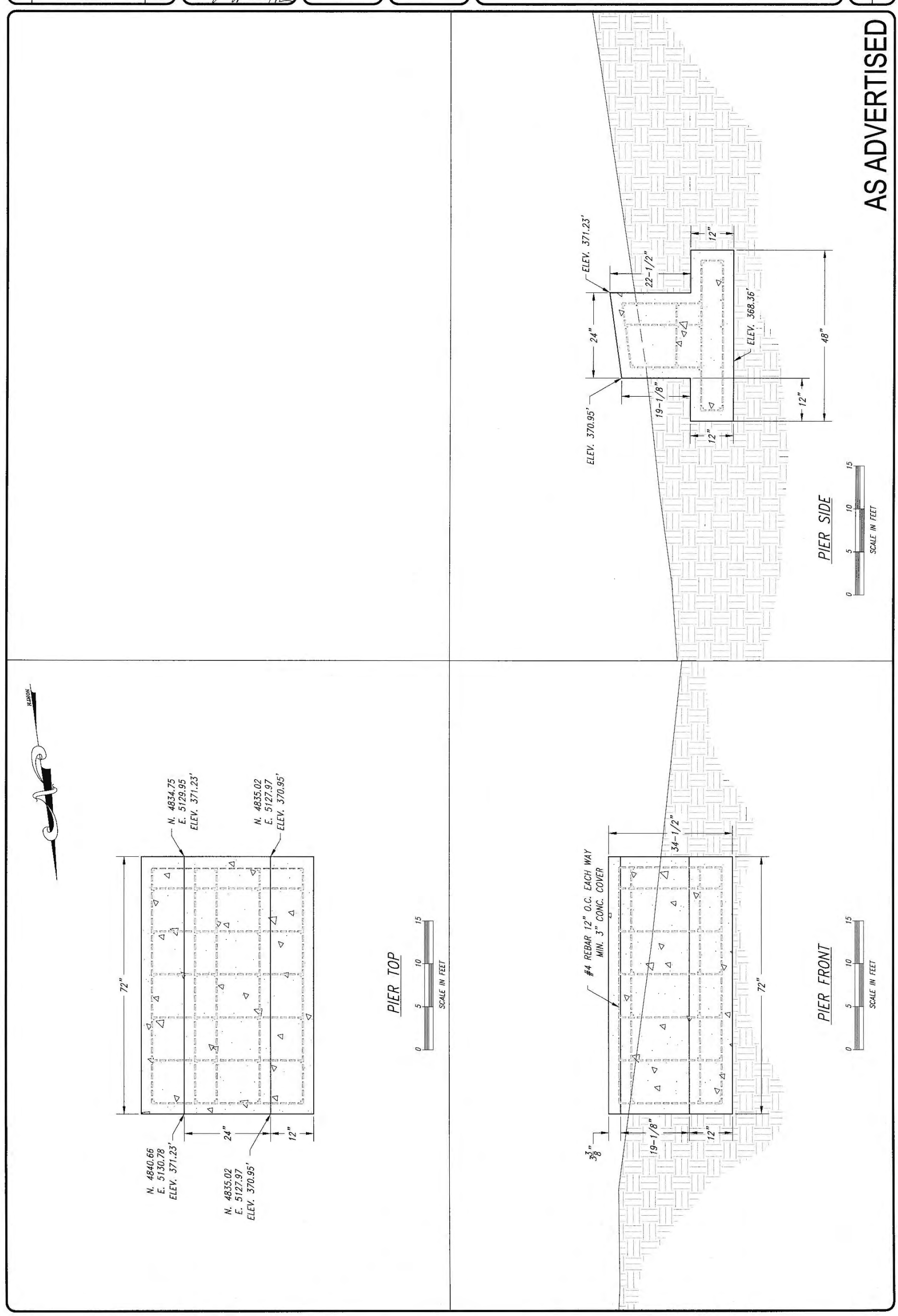
OREGON STATE MARINE BOARD
CAST-IN-PLACE PIER DETAILS
AT ORCHARD POINT PARK ON FERN RIDGE RESERVOIR
FOR LANE COUNTY PARKS
05 SHEET
14 OF
2010-1493-05 DRAWING NO.
AS ADVERTISED
PIER SIDE
ELEV. 371.23'
ELEV. 370.95'
ELEV. 368.36'
22-1/2"
19-1/8"
24"
12"
48"
PIER TOP
N. 4834.75 E. 5129.95 ELEV. 371.23'
N. 4835.02 E. 5127.97 ELEV. 370.95'
N. 4840.66 E. 5130.78 ELEV. 371.23'
72"
NORTH
PIER FRONT
#4 REBAR 12" O.C. EACH WAY MIN. 3" CONC. COVER
34-1/2"
3 3/8"
SCALE IN FEET
0 5 10 15
REGISTERED PROFESSIONAL ENGINEER
RAYMOND G. LAMAM
OREGON
JULY 19, 1984
EXPIRES DECEMBER 31, 2014
APPROVED BOATING FACILITIES MANAGER
FINAL CHECK BY
DESIGNED BY S. JANTZE
DRAWN BY S. JANTZE
DATE 23 APRIL 2014
DATE REVISIONS BY
FILE PATH J:\Civil 3D Projects\493 - Orchard Point\Drawings\
FILE NAME 05 - CIP Pier Details.dwg

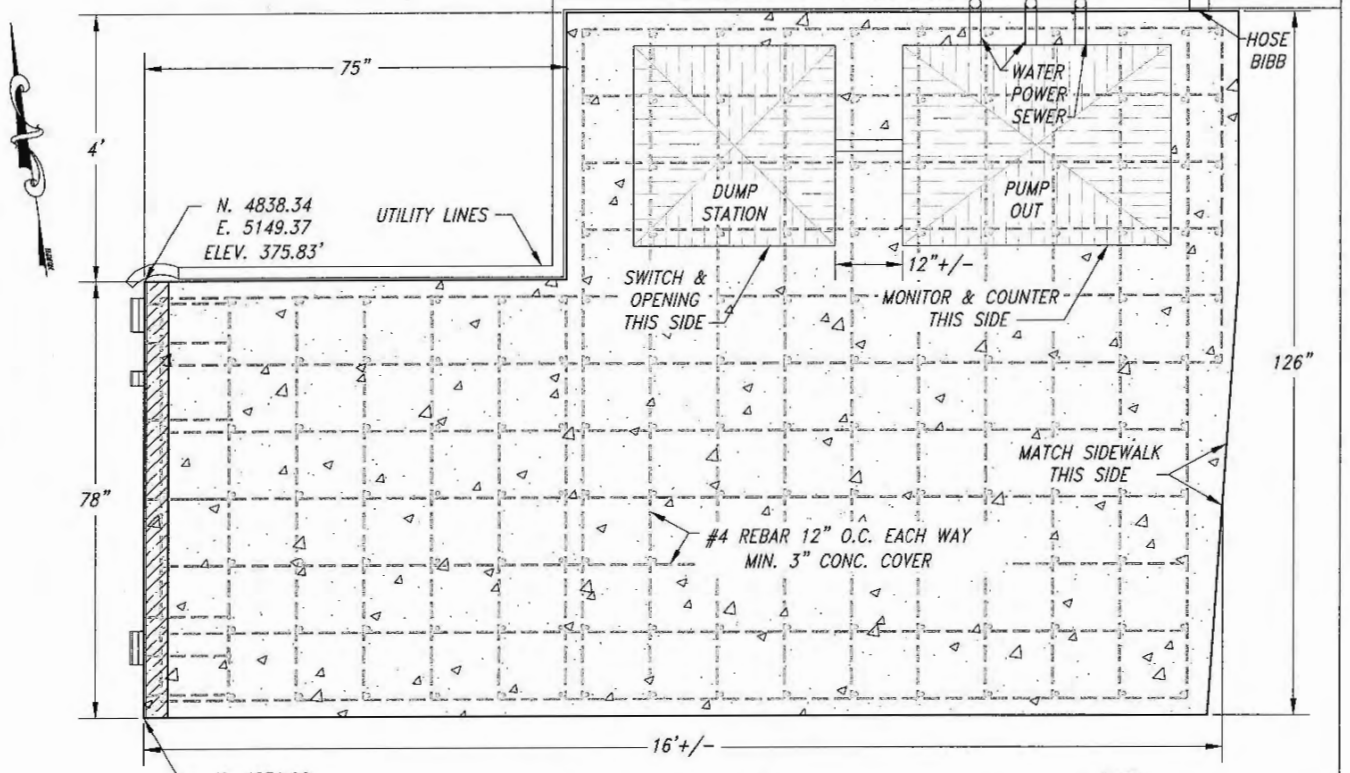

ABUTMENT PLAN

0 1 2 3 4
SCALE IN FEET

NOTE:
- BACKFILL AROUND SIDES OF ABUTMENT TO WITHIN 1' OF TOP SURFACE.
- BACKFILL AT 2:1 SLOPE.
- DO NOT BACKFILL ON FLOAT SIDE.

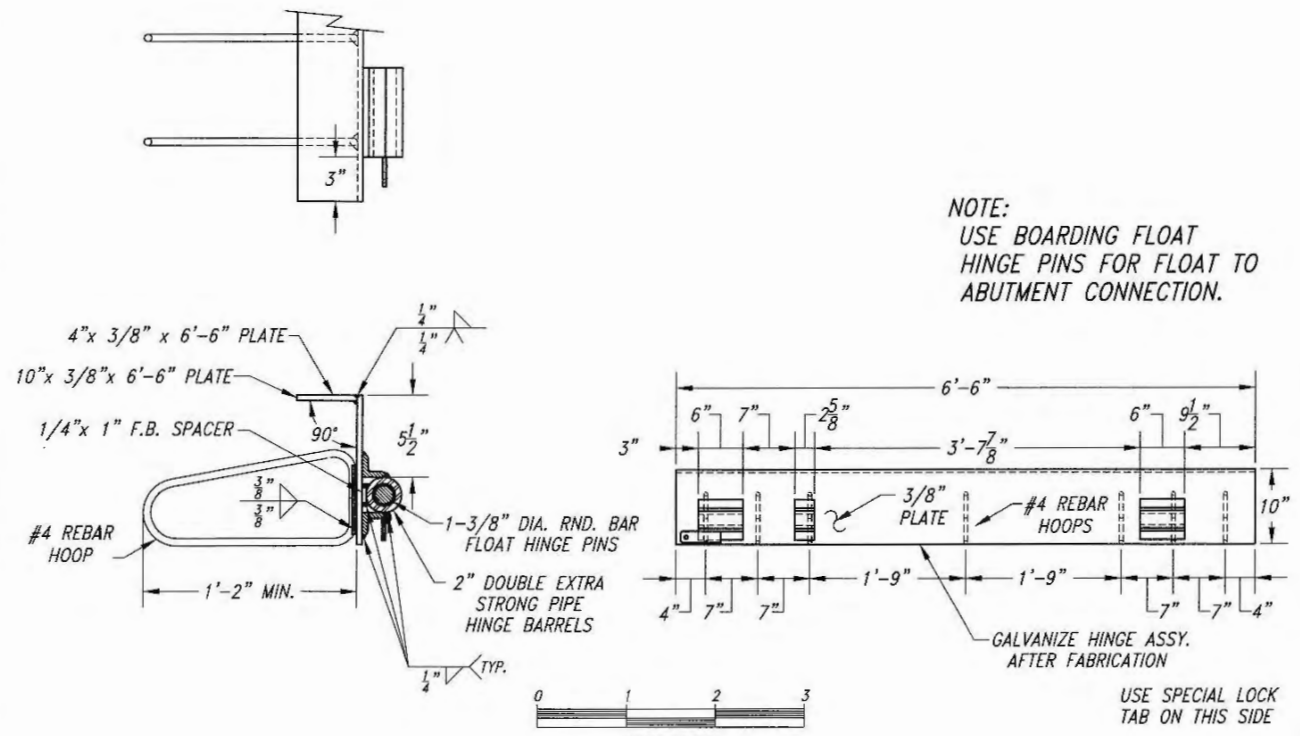

NOTE:
USE BOARDING FLOAT HINGE PINS FOR FLOAT TO ABUTMENT CONNECTION.

0 1 2 3
SCALE IN FEET

HINGE DETAILS

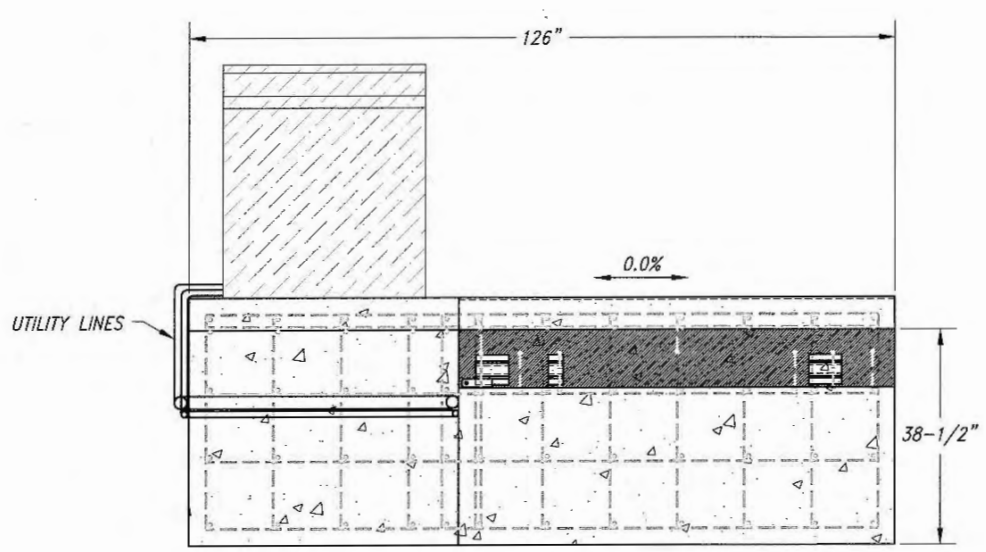

ABUTMENT FRONT

NOTE:
- BACKFILL AROUND SIDES OF ABUTMENT TO WITHIN 1' OF TOP SURFACE.
- BACKFILL AT 2:1 SLOPE.
- DO NOT BACKFILL ON FLOAT SIDE.

0 1 2 3 4
SCALE IN FEET

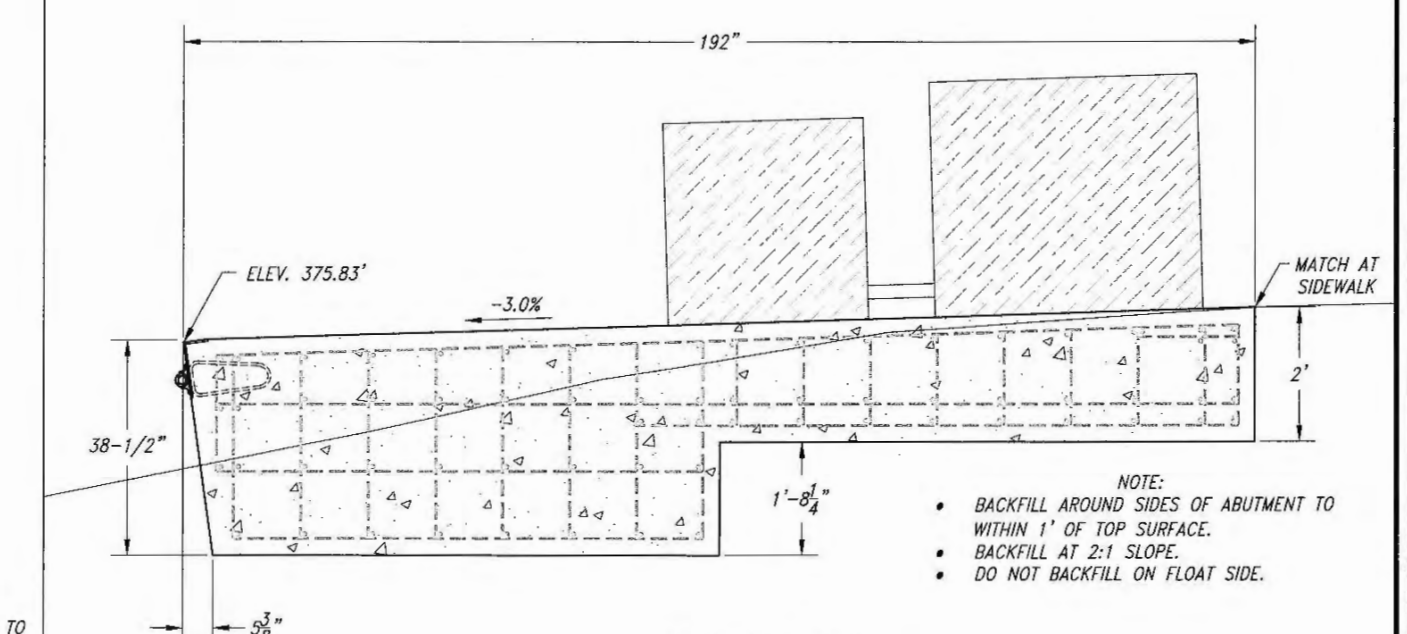

NOTE:
- BACKFILL AROUND SIDES OF ABUTMENT TO WITHIN 1' OF TOP SURFACE.
- BACKFILL AT 2:1 SLOPE.
- DO NOT BACKFILL ON FLOAT SIDE.

ABUTMENT SIDE

0 1 2 3 4
SCALE IN FEET

AS ADVERTISED

DATE	REVISIONS	BY

FILE PATH J:\Civil 3D Projects\1493 - Orchard Point\Drawings\
FILE NAME 06 - CIP Abutment.dwg

APPROVED: BOATING FACILITIES MANAGER
PREPARED BY: S. JANTZE
DESIGNED BY: S. JANTZE
DRAWN BY: S. JANTZE
DATE: 23 APRIL 2014

REGISTERED PROFESSIONAL ENGINEER
OREGON
RAYMOND G. LAHAM
EXPIRES DECEMBER 31, 2014

OREGON STATE MARINE BOARD

CAST-IN-PLACE ABUTMENT DETAILS
AT ORCHARD POINT PARK ON FERN RIDGE RESERVOIR
FOR LANE COUNTY PARKS

OREGON STATE MARINE BOARD

06	14
SHEET	OF

2010 - 1493 - 06
DRAWING NO.

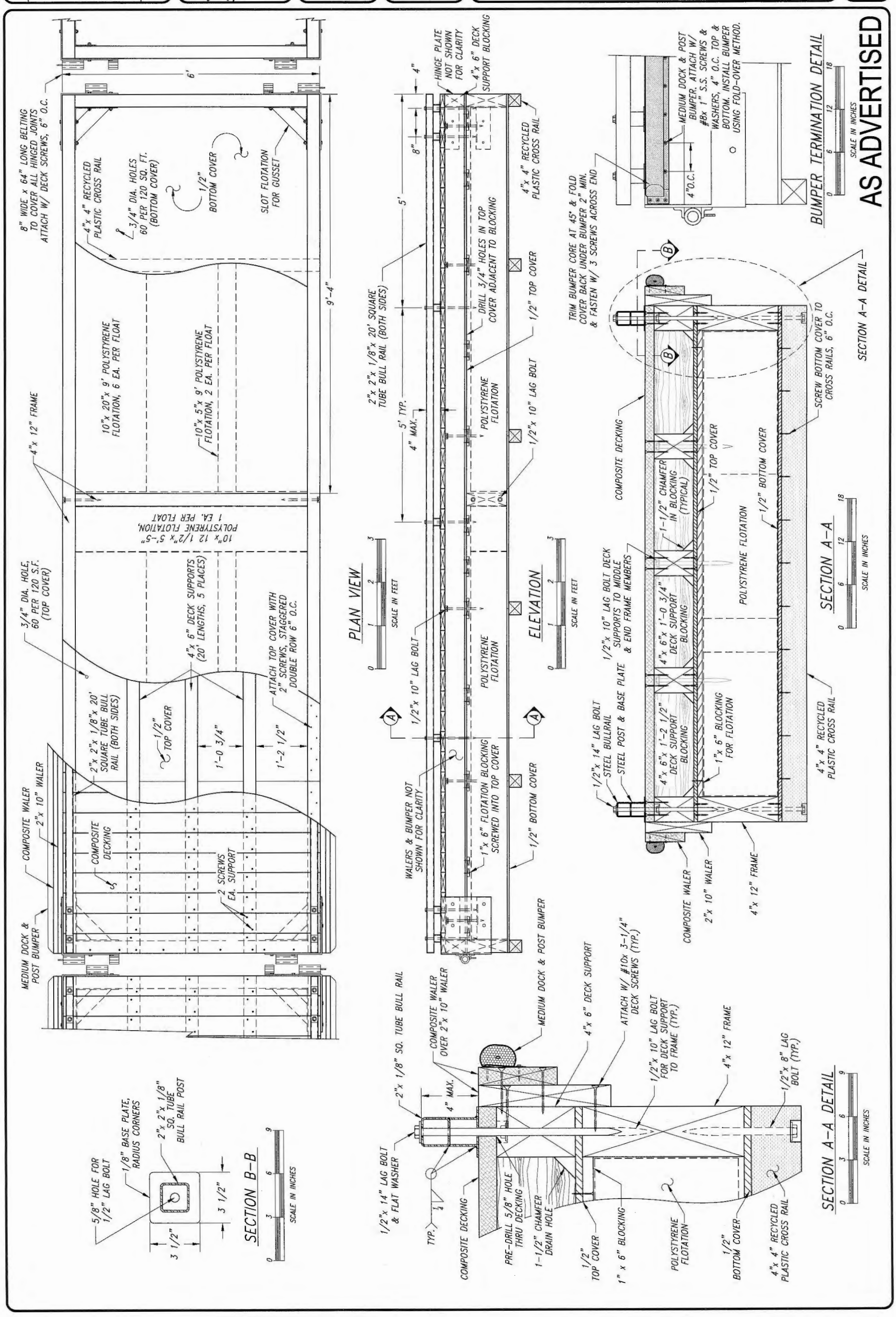
OREGON STATE MARINE BOARD
BOARDING FLOAT PLAN & ELEVATION
AT ORCHARD POINT PARK ON FERN RIDGE RESERVOIR
FOR LANE COUNTY PARKS
09 SHEET
14 OF
2010 - 1493 - 09 DRAWING NO.
AS ADVERTISED
PLAN VIEW
ELEVATION
SECTION A-A
SECTION A-A DETAIL
SECTION B-B
BUMPER TERMINATION DETAIL
SCALE IN FEET
SCALE IN INCHES
8" WIDE x 64" LONG BELTING TO COVER ALL HINGED JOINTS ATTACH W/ DECK SCREWS, 6" O.C.
4"x 4" RECYCLED PLASTIC CROSS RAIL
3/4" DIA. HOLES 60 PER 120 SQ. FT. (BOTTOM COVER)
1/2" BOTTOM COVER
SLOT FLOTATION FOR GUSSET
4"x 12" FRAME
10"x 20"x 9' POLYSTYRENE FLOTATION, 6 EA. PER FLOAT
10"x 5"x 9' POLYSTYRENE FLOTATION, 2 EA. PER FLOAT
10"x 12 1/2"x 5'-5" POLYSTYRENE FLOTATION, 1 EA. PER FLOAT
3/4" DIA. HOLE, 60 PER 120 S.F. (TOP COVER)
4"x 6" DECK SUPPORTS (20' LENGTHS, 5 PLACES)
ATTACH TOP COVER WITH 2" SCREWS, STAGGERED DOUBLE ROW 6" O.C.
2"x 2"x 1/8"x 20' SQUARE TUBE BULL RAIL (BOTH SIDES)
1/2" TOP COVER
1'-0 3/4"
1'-2 1/2"
COMPOSITE WALER
2"x 10" WALER
COMPOSITE DECKING
2 SCREWS EA. SUPPORT
MEDIUM DOCK & POST BUMPER
HINGE PLATE NOT SHOWN FOR CLARITY
4"x 6" DECK SUPPORT BLOCKING
4"x 4" RECYCLED PLASTIC CROSS RAIL
DRILL 3/4" HOLES IN TOP COVER ADJACENT TO BLOCKING
1/2" TOP COVER
POLYSTYRENE FLOTATION
1/2"x 10" LAG BOLT
2"x 2"x 1/8"x 20' SQUARE TUBE BULL RAIL (BOTH SIDES)
5' TYP.
4" MAX.
WALERS & BUMPER NOT SHOWN FOR CLARITY
1"x 6" FLOTATION BLOCKING SCREWED INTO TOP COVER
1/2" BOTTOM COVER
MEDIUM DOCK & POST BUMPER
TRIM BUMPER CORE AT 45° & FOLD COVER BACK UNDER BUMPER 2" MIN. & FASTEN W/ 3 SCREWS ACROSS END
MEDIUM DOCK & POST BUMPER. ATTACH W/ #8x 1" S.S. SCREWS & WASHERS, 4" O.C. TOP & BOTTOM. INSTALL BUMPER USING FOLD-OVER METHOD.
4"O.C.
COMPOSITE DECKING
1-1/2" CHAMFER IN BLOCKING (TYPICAL)
1/2" TOP COVER
1/2" BOTTOM COVER
SCREW BOTTOM COVER TO CROSS RAILS, 6" O.C.
1/2"x 10" LAG BOLT DECK SUPPORTS TO MIDDLE & END FRAME MEMBERS
4"x 6"x 1'-0 3/4" DECK SUPPORT BLOCKING
4"x 6"x 1'-2 1/2" DECK SUPPORT BLOCKING
1"x 6" BLOCKING FOR FLOTATION
1/2"x 14" LAG BOLT STEEL BULLRAIL STEEL POST & BASE PLATE
COMPOSITE WALER
2"x 10" WALER
4"x 12" FRAME
5/8" HOLE FOR 1/2" LAG BOLT
1/8" BASE PLATE, RADIUS CORNERS
2"x 2"x 1/8" SQ. TUBE BULL RAIL POST
3 1/2"
2"x 1/8" SQ. TUBE BULL RAIL
COMPOSITE WALER OVER 2"x 10" WALER
MEDIUM DOCK & POST BUMPER
4"x 6" DECK SUPPORT
ATTACH W/ #10x 3-1/4" DECK SCREWS (TYP.)
1/2"x 10" LAG BOLT FOR DECK SUPPORT TO FRAME (TYP.)
4"x 12" FRAME
1/2"x 8" LAG BOLT (TYP.)
1/2"x 14" LAG BOLT & FLAT WASHER
TYP.
COMPOSITE DECKING
PRE-DRILL 5/8" HOLE THRU DECKING
1-1/2" CHAMFER DRAIN HOLE
1/2" TOP COVER
1" x 6" BLOCKING
POLYSTYRENE FLOTATION
1/2" BOTTOM COVER
4"x 4" RECYCLED PLASTIC CROSS RAIL

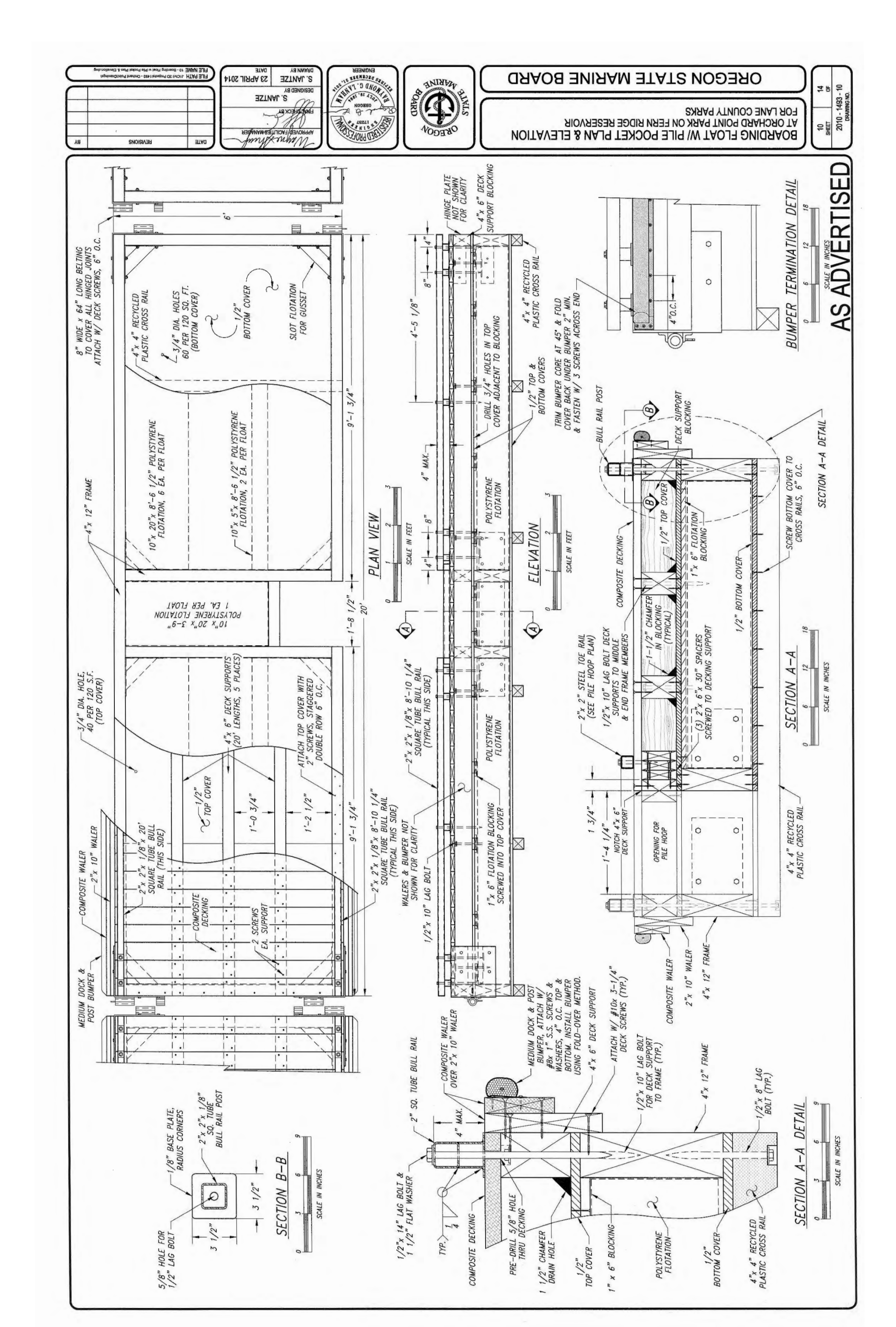
OREGON STATE MARINE BOARD
BOARDING FLOAT W/ PILE POCKET PLAN & ELEVATION
AT ORCHARD POINT PARK ON FERN RIDGE RESERVOIR
FOR LANE COUNTY PARKS
10 SHEET
14 OF
2010 - 1493 - 10 DRAWING NO.
AS ADVERTISED
PLAN VIEW
ELEVATION
SECTION A-A
SECTION A-A DETAIL
SECTION B-B
BUMPER TERMINATION DETAIL
SCALE IN FEET
SCALE IN INCHES
8" WIDE x 64" LONG BELTING TO COVER ALL HINGED JOINTS ATTACH W/ DECK SCREWS, 6" O.C.
4"x 4" RECYCLED PLASTIC CROSS RAIL
3/4" DIA. HOLES 60 PER 120 SQ. FT. (BOTTOM COVER)
1/2" BOTTOM COVER
SLOT FLOTATION FOR GUSSET
10"x 20"x 8'-6 1/2" POLYSTYRENE FLOTATION, 6 EA. PER FLOAT
10"x 5"x 8'-6 1/2" POLYSTYRENE FLOTATION, 2 EA. PER FLOAT
10"x 20"x 3-9" POLYSTYRENE FLOTATION 1 EA. PER FLOAT
4"x 12" FRAME
3/4" DIA. HOLE, 40 PER 120 S.F. (TOP COVER)
4"x 6" DECK SUPPORTS (20' LENGTHS, 5 PLACES)
ATTACH TOP COVER WITH 2" SCREWS, STAGGERED DOUBLE ROW 6" O.C.
1/2" TOP COVER
2"x 2"x 1/8"x 20' SQUARE TUBE BULL RAIL (THIS SIDE)
2"x 2"x 1/8"x 8'-10 1/4" SQUARE TUBE BULL RAIL (TYPICAL THIS SIDE)
COMPOSITE WALER
2"x 10" WALER
COMPOSITE DECKING
2 SCREWS EA. SUPPORT
MEDIUM DOCK & POST BUMPER
HINGE PLATE NOT SHOWN FOR CLARITY
4"x 6" DECK SUPPORT BLOCKING
4"x 4" RECYCLED PLASTIC CROSS RAIL
DRILL 3/4" HOLES IN TOP COVER ADJACENT TO BLOCKING
1/2" TOP & BOTTOM COVERS
POLYSTYRENE FLOTATION
WALERS & BUMPER NOT SHOWN FOR CLARITY
1"x 6" FLOTATION BLOCKING SCREWED INTO TOP COVER
1/2"x 10" LAG BOLT
TRIM BUMPER CORE AT 45° & FOLD COVER BACK UNDER BUMPER 2" MIN. & FASTEN W/ 3 SCREWS ACROSS END
BULL RAIL POST
DECK SUPPORT BLOCKING
COMPOSITE DECKING
1/2" TOP COVER
1"x 6" FLOTATION BLOCKING
1/2" BOTTOM COVER
SCREW BOTTOM COVER TO CROSS RAILS, 6" O.C.
1-1/2" CHAMFER IN BLOCKING (TYPICAL)
2"x 2" STEEL TOE RAIL (SEE PILE HOOP PLAN)
1/2"x 10" LAG BOLT DECK SUPPORTS TO MIDDLE & END FRAME MEMBERS
(3) 2"x 6"x 30" SPACERS SCREWED TO DECKING SUPPORT
OPENING FOR PILE HOOP
NOTCH 4"x 6" DECK SUPPORT
COMPOSITE WALER
2"x 10" WALER
4"x 12" FRAME
1/8" BASE PLATE, RADIUS CORNERS
2"x 2"x 1/8" SQ. TUBE BULL RAIL POST
5/8" HOLE FOR 1/2" LAG BOLT
2" SQ. TUBE BULL RAIL
COMPOSITE WALER OVER 2"x 10" WALER
MEDIUM DOCK & POST BUMPER, ATTACH W/ #8x 1" S.S. SCREWS & WASHERS, 4" O.C. TOP & BOTTOM. INSTALL BUMPER USING FOLD-OVER METHOD.
ATTACH W/ #10x 3-1/4" DECK SCREWS (TYP.)
1/2"x 10" LAG BOLT FOR DECK SUPPORT TO FRAME (TYP.)
1/2"x 8" LAG BOLT (TYP.)
1/2"x 14" LAG BOLT & 1 1/2" FLAT WASHER
COMPOSITE DECKING
PRE-DRILL 5/8" HOLE THRU DECKING
1 1/2" CHAMFER DRAIN HOLE
1/2" TOP COVER
1" x 6" BLOCKING
POLYSTYRENE FLOTATION
1/2" BOTTOM COVER
4"x 4" RECYCLED PLASTIC CROSS RAIL

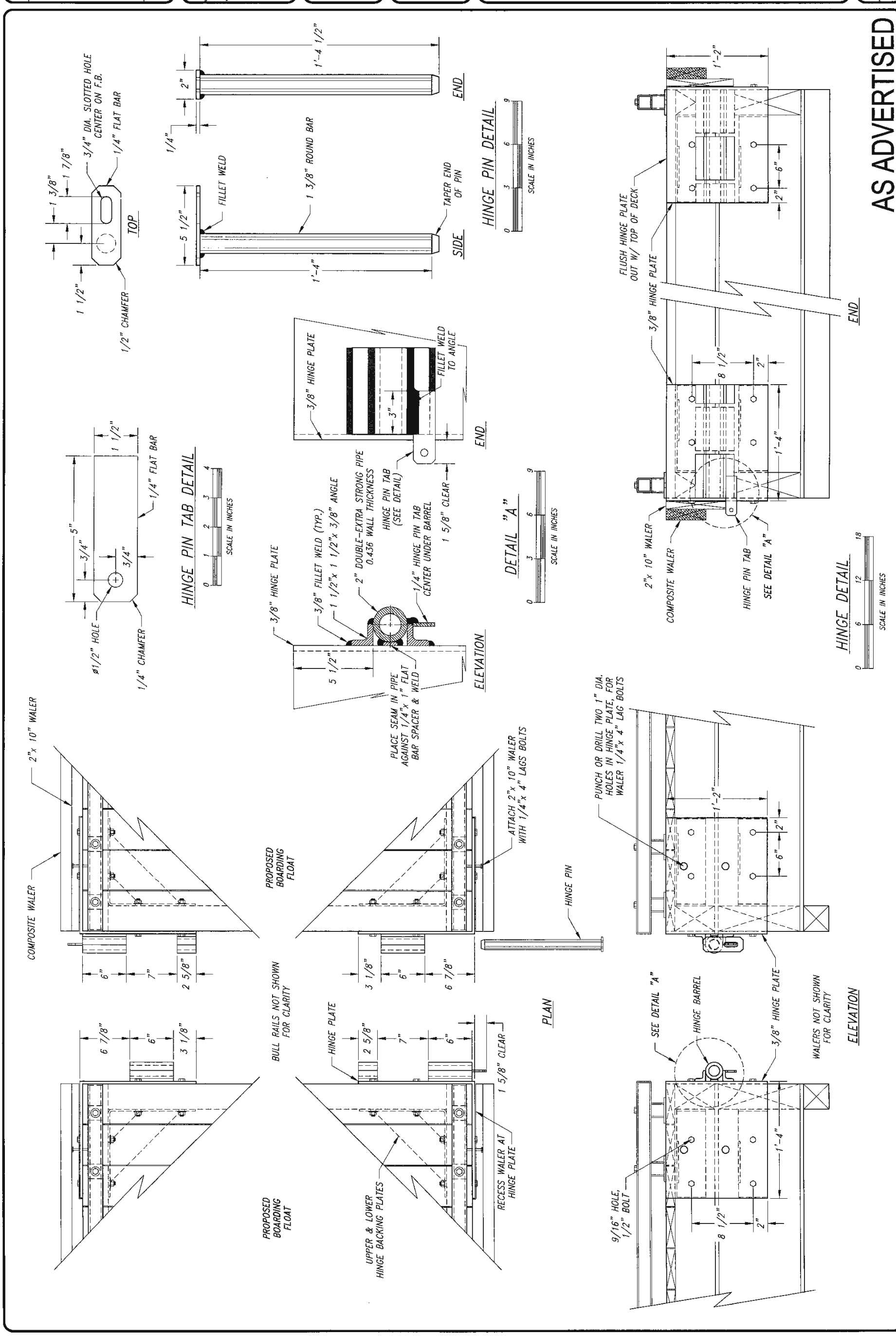
OREGON STATE MARINE BOARD
BOARDING FLOAT HINGE DETAILS
AT ORCHARD POINT PARK ON FERN RIDGE RESERVOIR
FOR LANE COUNTY PARKS
11 SHEET
14 OF
2010 - 1493 - 11 DRAWING NO.
AS ADVERTISED
HINGE PIN TAB DETAIL
HINGE PIN DETAIL
HINGE DETAIL
DETAIL "A"
ELEVATION
PLAN
ELEVATION
SCALE IN INCHES
3/4" DIA. SLOTTED HOLE CENTER ON F.B.
1/4" FLAT BAR
1/2" CHAMFER
ø1/2" HOLE
1/4" CHAMFER
FILLET WELD
1 3/8" ROUND BAR
TAPER END OF PIN
3/8" HINGE PLATE
FILLET WELD TO ANGLE
2" DOUBLE-EXTRA STRONG PIPE 0.436 WALL THICKNESS
HINGE PIN TAB (SEE DETAIL)
1 5/8" CLEAR
3/8" FILLET WELD (TYP.)
1/4" HINGE PIN TAB CENTER UNDER BARREL
PLACE SEAM IN PIPE AGAINST 1/4" x 1" FLAT BAR SPACER & WELD
FLUSH HINGE PLATE OUT W/ TOP OF DECK
2"x 10" WALER
COMPOSITE WALER
HINGE PIN TAB
SEE DETAIL "A"
PUNCH OR DRILL TWO 1" DIA. HOLES IN HINGE PLATE, FOR WALER 1/4"x 4" LAG BOLTS
ATTACH 2"x 10" WALER WITH 1/4"x 4" LAGS BOLTS
HINGE PIN
PROPOSED BOARDING FLOAT
BULL RAILS NOT SHOWN FOR CLARITY
HINGE PLATE
RECESS WALER AT HINGE PLATE
UPPER & LOWER HINGE BACKING PLATES
SEE DETAIL "A"
HINGE BARREL
3/8" HINGE PLATE
WALERS NOT SHOWN FOR CLARITY
9/16" HOLE, 1/2" BOLT

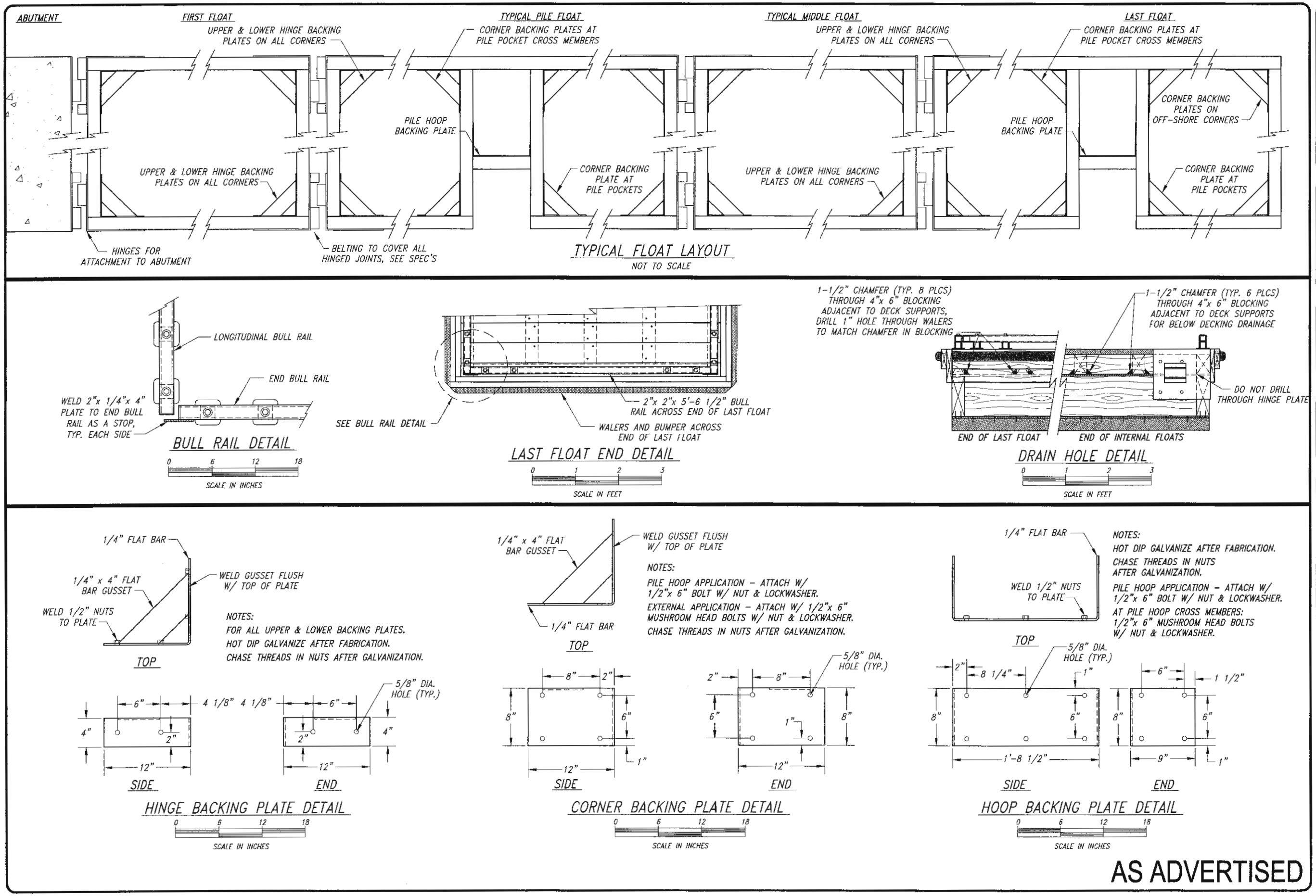

DATE	REVISIONS	BY

FILE PATH: J:\Civil 3D Projects\1493 - Orchard Point\Drawings\
FILE NAME: 12 - Float Layout & Hinge Backing Plate Details.dwg

APPROVED: FACILITIES MANAGER

CHECKED BY: RAYMOND G. HARRIS

DESIGNED BY: S. JANTZE

DRAWN BY: S. JANTZE

DATE: 23 APRIL 2014

REGISTERED PROFESSIONAL ENGINEER — RAYMOND G. HARRIS — OREGON — EXPIRES 12/31/14

OREGON STATE MARINE BOARD

FLOAT LAYOUT & HINGE BACKING PLATE DETAILS
AT ORCHARD POINT PARK ON FERN RIDGE RESERVOIR
FOR LANE COUNTY PARKS

OREGON STATE MARINE BOARD

SHEET 12 OF 14

DRAWING NO. 2010 - 1493 - 12

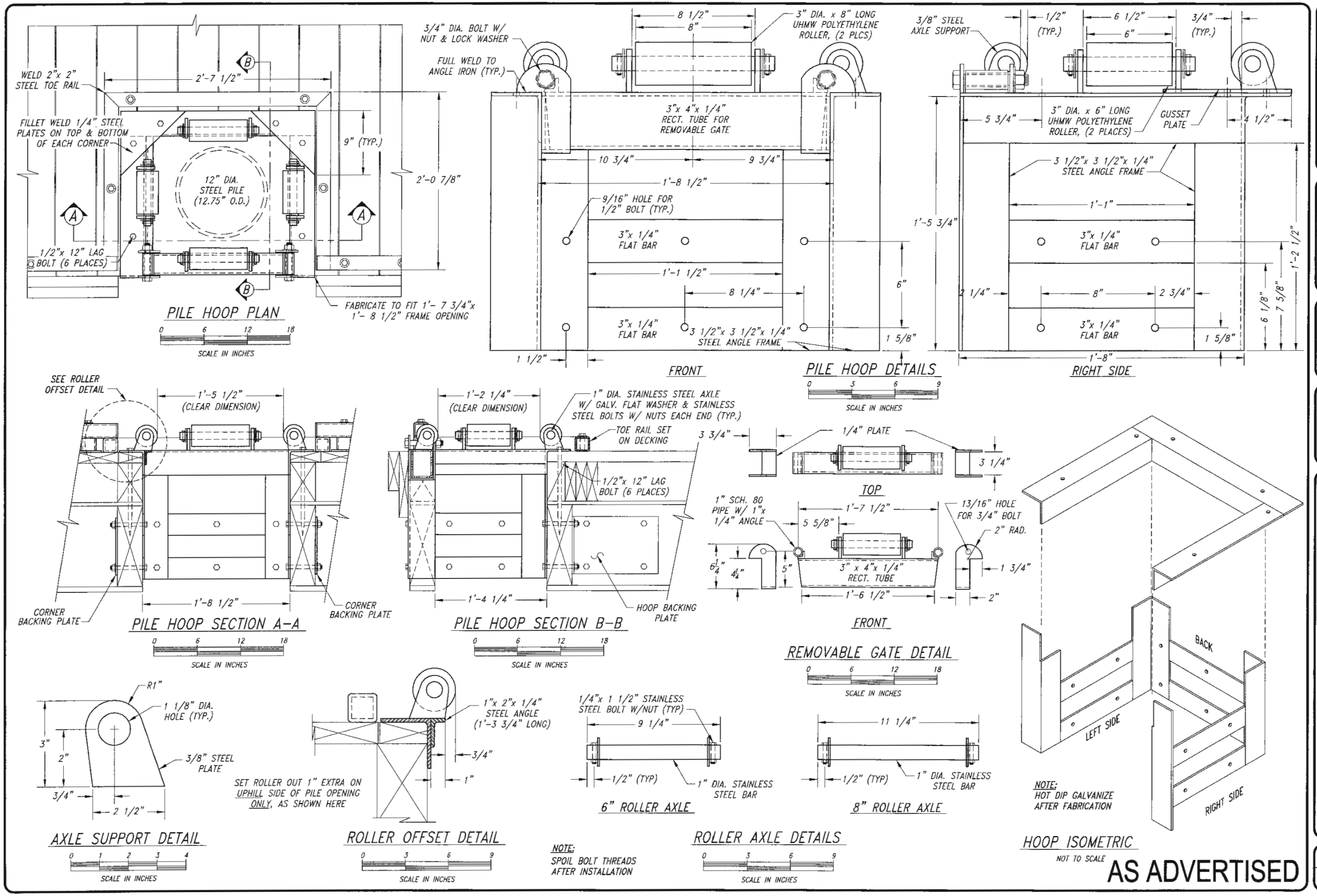
PILE HOOP PLAN
WELD 2"x 2" STEEL TOE RAIL
2'-7 1/2"
FILLET WELD 1/4" STEEL PLATES ON TOP & BOTTOM OF EACH CORNER
9" (TYP.)
2'-0 7/8"
12" DIA. STEEL PILE (12.75" O.D.)
1/2"x 12" LAG BOLT (6 PLACES)
FABRICATE TO FIT 1'- 7 3/4"x 1'- 8 1/2" FRAME OPENING
SCALE IN INCHES
PILE HOOP DETAILS
3/4" DIA. BOLT W/ NUT & LOCK WASHER
FULL WELD TO ANGLE IRON (TYP.)
8 1/2"
8"
3" DIA. x 8" LONG UHMW POLYETHYLENE ROLLER, (2 PLCS)
3"x 4"x 1/4" RECT. TUBE FOR REMOVABLE GATE
10 3/4"
9 3/4"
1'-8 1/2"
9/16" HOLE FOR 1/2" BOLT (TYP.)
3"x 1/4" FLAT BAR
1'-1 1/2"
8 1/4"
6"
3 1/2"x 3 1/2"x 1/4" STEEL ANGLE FRAME
1 5/8"
1 1/2"
FRONT
3/8" STEEL AXLE SUPPORT
1/2" (TYP.)
6 1/2"
6"
3/4" (TYP.)
5 3/4"
3" DIA. x 6" LONG UHMW POLYETHYLENE ROLLER, (2 PLACES)
GUSSET PLATE
4 1/2"
3 1/2"x 3 1/2"x 1/4" STEEL ANGLE FRAME
1'-1"
1'-5 3/4"
1'-2 1/2"
2 1/4"
8"
2 3/4"
6 1/8"
7 5/8"
1'-8"
RIGHT SIDE
SEE ROLLER OFFSET DETAIL
1'-5 1/2" (CLEAR DIMENSION)
1'-8 1/2"
CORNER BACKING PLATE
PILE HOOP SECTION A-A
1'-2 1/4" (CLEAR DIMENSION)
1" DIA. STAINLESS STEEL AXLE W/ GALV. FLAT WASHER & STAINLESS STEEL BOLTS W/ NUTS EACH END (TYP.)
TOE RAIL SET ON DECKING
1/2"x 12" LAG BOLT (6 PLACES)
1'-4 1/4"
HOOP BACKING PLATE
PILE HOOP SECTION B-B
3 3/4"
1/4" PLATE
3 1/4"
TOP
1" SCH. 80 PIPE W/ 1"x 1/4" ANGLE
1'-7 1/2"
5 5/8"
13/16" HOLE FOR 3/4" BOLT
2" RAD.
6 1/4"
4 1/4"
5"
3" x 4"x 1/4" RECT. TUBE
1 3/4"
1'-6 1/2"
2"
FRONT
REMOVABLE GATE DETAIL
BACK
LEFT SIDE
RIGHT SIDE
NOTE: HOT DIP GALVANIZE AFTER FABRICATION
HOOP ISOMETRIC
NOT TO SCALE
R1"
1 1/8" DIA. HOLE (TYP.)
3"
2"
3/8" STEEL PLATE
3/4"
2 1/2"
AXLE SUPPORT DETAIL
1"x 2"x 1/4" STEEL ANGLE (1'-3 3/4" LONG)
3/4"
1"
SET ROLLER OUT 1" EXTRA ON UPHILL SIDE OF PILE OPENING ONLY, AS SHOWN HERE
ROLLER OFFSET DETAIL
1/4"x 1 1/2" STAINLESS STEEL BOLT W/NUT (TYP)
9 1/4"
1/2" (TYP)
1" DIA. STAINLESS STEEL BAR
6" ROLLER AXLE
11 1/4"
1/2" (TYP)
1" DIA. STAINLESS STEEL BAR
8" ROLLER AXLE
NOTE: SPOIL BOLT THREADS AFTER INSTALLATION
ROLLER AXLE DETAILS
AS ADVERTISED
REVISIONS
DATE
BY
FILE PATH: J:\Civil 3D Projects\1493 - Certified Point\Drawings\
FILE NAME: 13 - Internal Pile Hoop Details.dwg
APPROVED: FACILITIES MANAGER
FINAL CHECK BY
DESIGNED BY S. JANTZE
DRAWN BY S. JANTZE
23 APRIL 2014
DATE
REGISTERED PROFESSIONAL ENGINEER
OREGON STATE MARINE BOARD
INTERNAL PILE HOOP DETAILS
AT ORCHARD POINT PARK ON FERN RIDGE RESERVOIR
FOR LANE COUNTY PARKS
OREGON STATE MARINE BOARD
13 SHEET
14 OF
2010 - 1493 - 13
DRAWING NO.

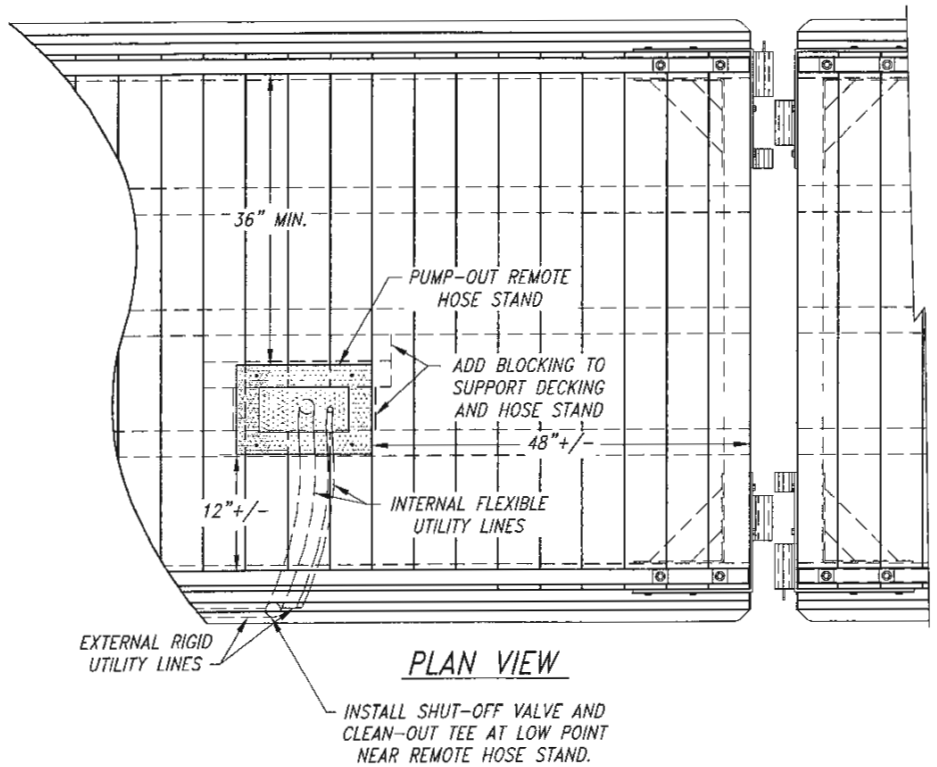

PLAN VIEW

NOTES:

- PUMP-OUT, DUMP STATION, & REMOTE HOSE STAND SHALL BE OWNER FURNISHED. COORDINATE WITH OWNER FOR EXACT EQUIPMENT DIMENSIONS.
- INSTALL 2" PVC SEWER LINE EXTERNALLY ON FLOAT.
- INSTALL 3/4" ELECTRICAL CONDUIT EXTERNALLY ON FLOAT
- USE FLEX CONNECTIONS AT FLOAT SECTIONS ON ALL UTILITY LINES.
- USE FLEX CONNECTIONS AT TRANSITION FROM EXTERIOR OF FLOAT TO HOSE STAND. MINIMIZE SHARP RADII AND SAGGING FLEX LINES.

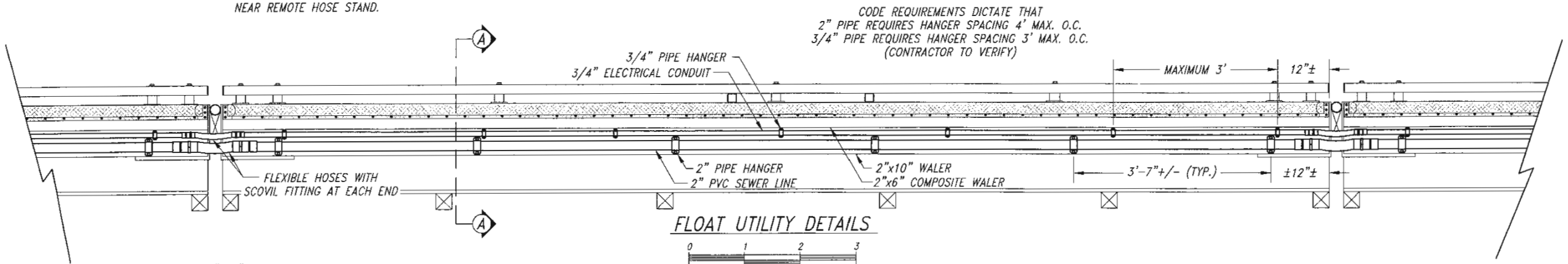

FLOAT UTILITY DETAILS

0 1 2 3

SCALE IN FEET

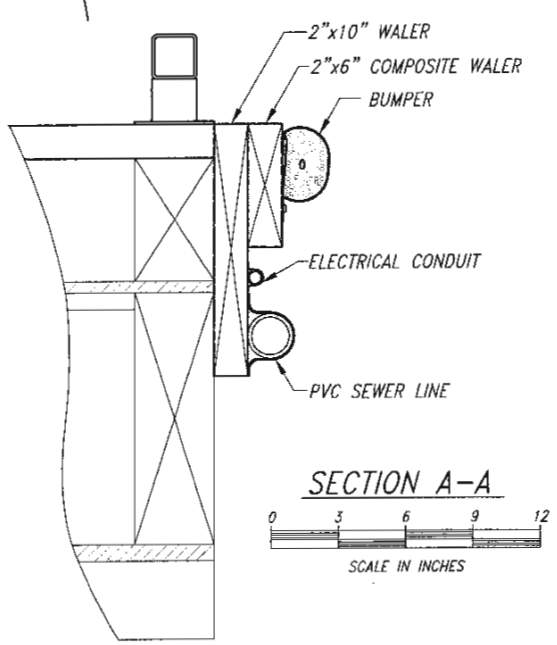

SECTION A-A

0 3 6 9 12

SCALE IN INCHES

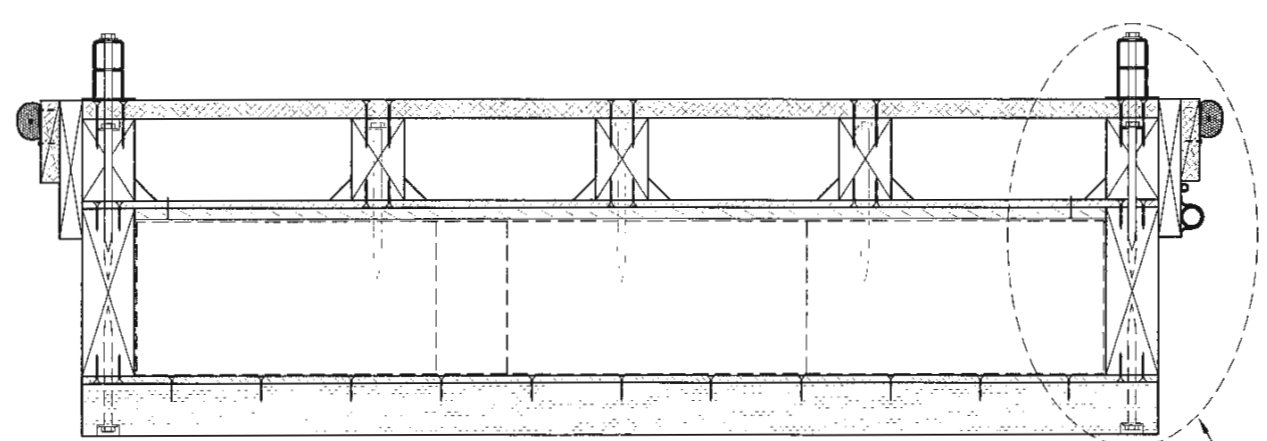

FLOAT SECTION

0 6 12 18

SCALE IN INCHES

SECTION A-A DETAIL

AS ADVERTISED

DATE	REVISIONS	BY

FILE PATH: J:\Civil 3D Projects\1493 - Orchard Point\Drawings\
FILE NAME: 14 - Boarding Float Details.dwg

APPROVED: BOATING FACILITIES MANAGER

FINAL CHECK BY

DESIGNED BY: S. JANTZE

DRAWN BY: S. JANTZE

DATE: 23 APRIL 2014

REGISTERED PROFESSIONAL ENGINEER — OREGON — JULY 15, 1997 — RAYMOND C. JANTZE — EXPIRES DECEMBER 31, 2014

OREGON STATE MARINE BOARD

BOARDING FLOAT UTILITY DETAILS
AT ORCHARD POINT PARK ON FERN RIDGE RESERVOIR
FOR LANE COUNTY PARKS

OREGON STATE MARINE BOARD

SHEET 14 OF 14

DRAWING NO. 2010 - 1493 - 14