SIERRA FOUNDATION REPAIR

1236 BAY STREET
FLORENCE, OREGON 97439

GENERAL NOTES

1. THE CONTRACTOR SHALL HAVE AT ALL TIMES ON-SITE, THE APPROVED CONSTRUCTION PLANS, PERMITS, STANDARD PLANS, AND ALL OTHER APPLICABLE SPECIFICATIONS BOOKS AND MANUALS.
2. ALL CONSTRUCTION AND MATERIALS SHALL CONFORM TO THESE PLANS AND THE APPLICABLE REQUIREMENTS OF THE CURRENT EDITION OF THE OREGON DEPARTMENT OF TRANSPORTATION (ODOT) STANDARD CONSTRUCTION SPECIFICATIONS AND ALL REVISIONS AND SPECIAL SPECIFICATIONS, EXCEPT WHERE SPECIFICALLY STATED OTHERWISE.
3. ATTENTION EXCAVATORS: OREGON LAW REQUIRES YOU TO FOLLOW RULES ADOPTED BY THE OREGON UTILITY NOTIFICATION CENTER. THOSE RULES ARE SET FORTH IN OAR 952-001-0010 THROUGH OAR 952-001-0090. YOU MAY OBTAIN COPIES OF THESE RULES FROM THE CENTER BY CALLING 1.800.332.2344. IF YOU HAVE ANY QUESTIONS ABOUT THE RULES, YOU MAY CONTACT THE CALL CENTER. YOU MUST NOTIFY THE CENTER AT LEAST 2 BUSINESS DAYS, BUT NOT MORE THAN 10 BUSINESS DAYS, BEFORE COMMENCING AN EXCAVATION. CALL 1.800.332.2344.
4. DRAWING SCALES ARE SHOWN BY THE BARSCALE AND TEXT. TEXT SCALE APPLIES TO FULL SCALE DRAWING 22" X 34" SIZE.
5. CONTRACTOR WILL HAVE USE OF AUTOCAD FILES TO PROVIDE DETAILED LOCATIONS, ELEVATIONS AND DIMENSIONS OF ALL CONSTRUCTION IMPROVEMENTS.
6. CONTRACTOR IS SOLELY RESPONSIBLE FOR CONFORMANCE WITH LOCAL, STATE AND FEDERAL CODES GOVERNING THE WORK.
7. ALL DISCREPANCIES IN THESE CONSTRUCTION DRAWINGS, REFERENCED SPECIFICATIONS, NOTES AND SITE CONDITIONS SHALL BE REPORTED TO THE ENGINEER OF RECORD. HE WILL DETERMINE CORRECTIONS OR REVISIONS AND SHALL ISSUE SUCH IN WRITING.
8. ALL FIELD CHANGES TO THESE APPROVED DRAWINGS SHALL BE PERMITTED AFTER AUTHORIZATION BY THE ENGINEER OF RECORD, INCLUDING CITY APPROVALS WHERE NECESSARY.
9. WORK IN PROXIMITY TO ADJACENT PROPERTY OWNERS SHALL BE COORDINATED IN ADVANCE.
10. CONTRACTOR SHALL PROTECT ALL FACILITIES, EXISTING OR NEW, FROM DAMAGE AND RESTORE TO ORIGINAL CONDITION WHERE REQUIRED.
11. NO VEHICLES WILL BE PERMITTED TO OCCUPY THE AREA BELOW OHW. ONLY HAND TOOLS WILL BE ACCEPTED IN THIS ZONE. EXCAVATION AND MATERIAL PLACEMENT SHALL BE ACCOMPLISHED BY SUITABLE EQUIPMENT LOCATED ABOVE OHW.
12. THE CONTRACTOR IS REQUIRED TO NOTIFY ALL UTILITIES 48 HOURS PRIOR TO COMMENCEMENT OF WORK.
13. CONTRACTOR ACCESS FROM BAY STREET TO NORTH. PROVIDE FOR THE SAFETY OF PUBLIC USERS IN THIS AREA.
14. THE CONTRACTOR MAY BE REQUIRED TO PROVIDE FLAGGING, SIGNS, AND OTHER TRAFFIC CONTROL DEVICES FOR SAFE TRUCK ACCESS ONTO PUBLIC STREETS. ALL SUCH DEVICES SHALL CONFORM TO THE STANDARDS ESTABLISHED IN THE LATEST ADOPTED EDITION OF THE "MANUAL ON UNIFORM TRAFFIC CONTROL DEVICES" (MUTCD) PUBLISHED BY THE U.S. DEPARTMENT OF TRANSPORTATION AND THE MODIFICATIONS TO THE MUTCD FOR STREETS AND HIGHWAYS FOR THE STATE OF WASHINGTON.
15. SHOULD ANY ITEM OF ARCHAEOLOGICAL INTEREST BE FOUND DURING DEVELOPMENT, YOU ARE REQUIRED TO STOP WORK AND NOTIFY THE CITY/STATE. FAILURE TO DO SO COULD RESULT IN A FELONY CONVICTION. THE ENGINEER AND CITY INSPECTOR SHALL ALSO BE NOTIFIED.

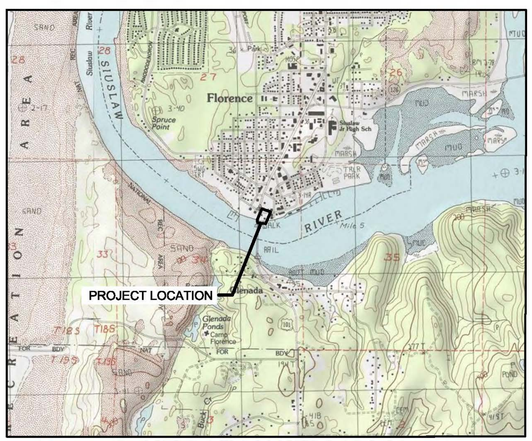

SITE VICINITY MAP
SCALE: NONE

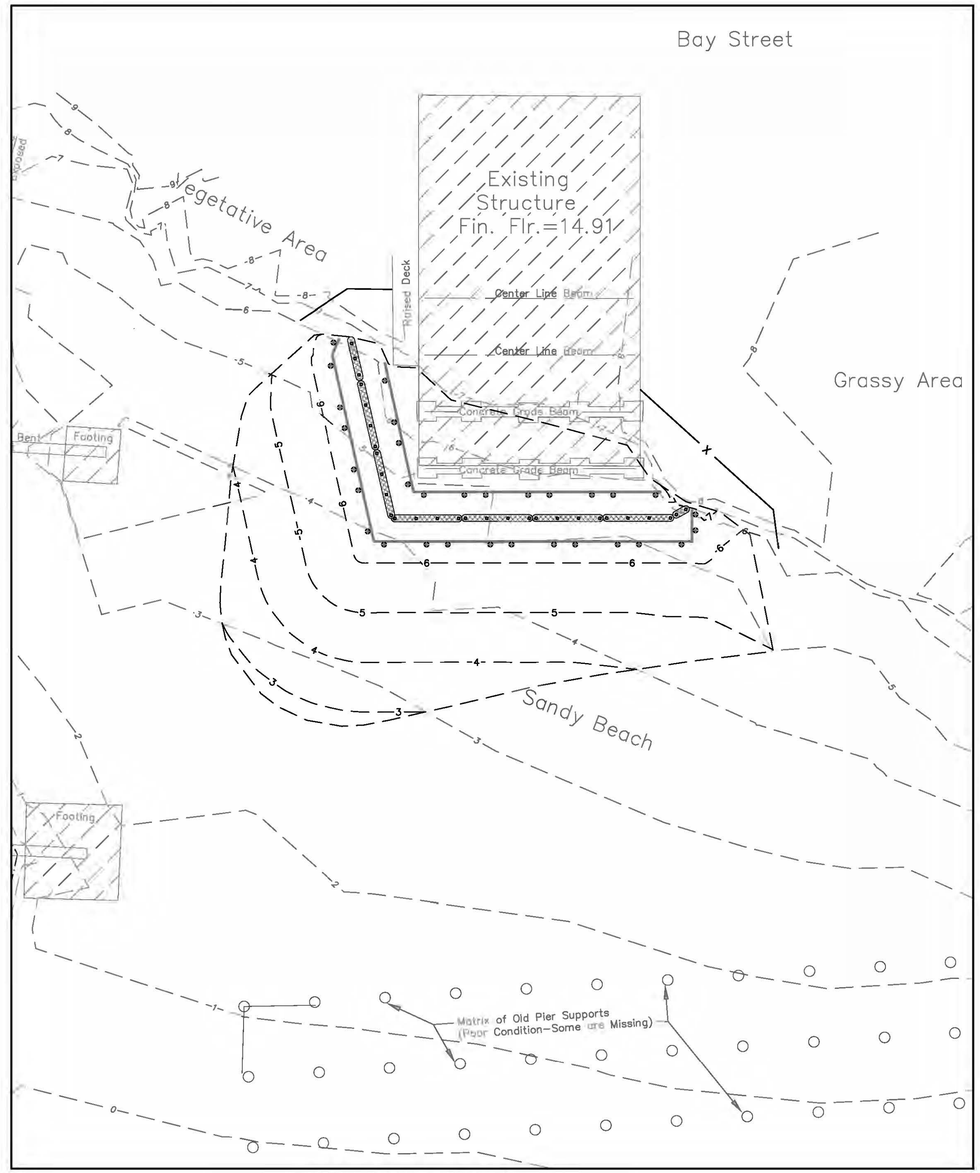

SITE PLAN
SCALE: 1"=10'

INDEX TO DRAWINGS

C1	COVER
C2	EXISTING CONDITIONS
C3	SITE IMPROVEMENT PLAN
C4	CROSS SECTIONS & DETAILS

PROJECT ABBREVIATIONS

FF	FINISH FLOOR
FG	FINISH GRADE
HMT	HIGHEST MEASURED TIDE
OHW	ORDINARY HIGH WATER
TW	TOP OF WALL

GENERAL INFORMATION:

OWNER:
CARSON OIL INC.
PRIMARY: KENNETH SIERRA
1236 BAY STREET FLORENCE, OR 97439
PH: - (OFFICE)
- (CELL)
E-MAIL: -

SITE CIVIL ENGINEER:
PBS ENGINEERING + ENVIRONMENTAL INC.
GEORGE DRAKE, P.E.
1500 D STREET
VANCOUVER, WA 98663
PH: 360.690.4331
E-MAIL: george.drake@pbsenv.com

811 Know what's below. Call before you dig.

PBS
Engineering + Environmental
486 E Street
Suite B
Coos Bay, OR 97420
541.266.8200 Main
866.727.0140 Fax
www.pbsenv.com

REGISTERED PROFESSIONAL ENGINEER 13475 OREGON JULY 15, 1987 GEORGE L. DRAKE
PRELIMINARY NOT FOR CONSTRUCTION
EXPIRES:

SIERRA FOUNDATION REPAIR
COVER

KENNETH SIERRA
1236 BAY STREET
FLORENCE, OREGON

NO.	REVISION	BY	DATE	CHK

PROJECT:	90036.001
DRAWN:	JK
CHECKED:	GD, PS
DATE:	MARCH 2014
DWG NO.	C1
SHEET NO.	1 OF 4

ENCL

Topographic Survey

Located in : T 18 S, R 12 W, SE1/4, NE1/4 Section 34 , W.M.
Lane County, Oregon

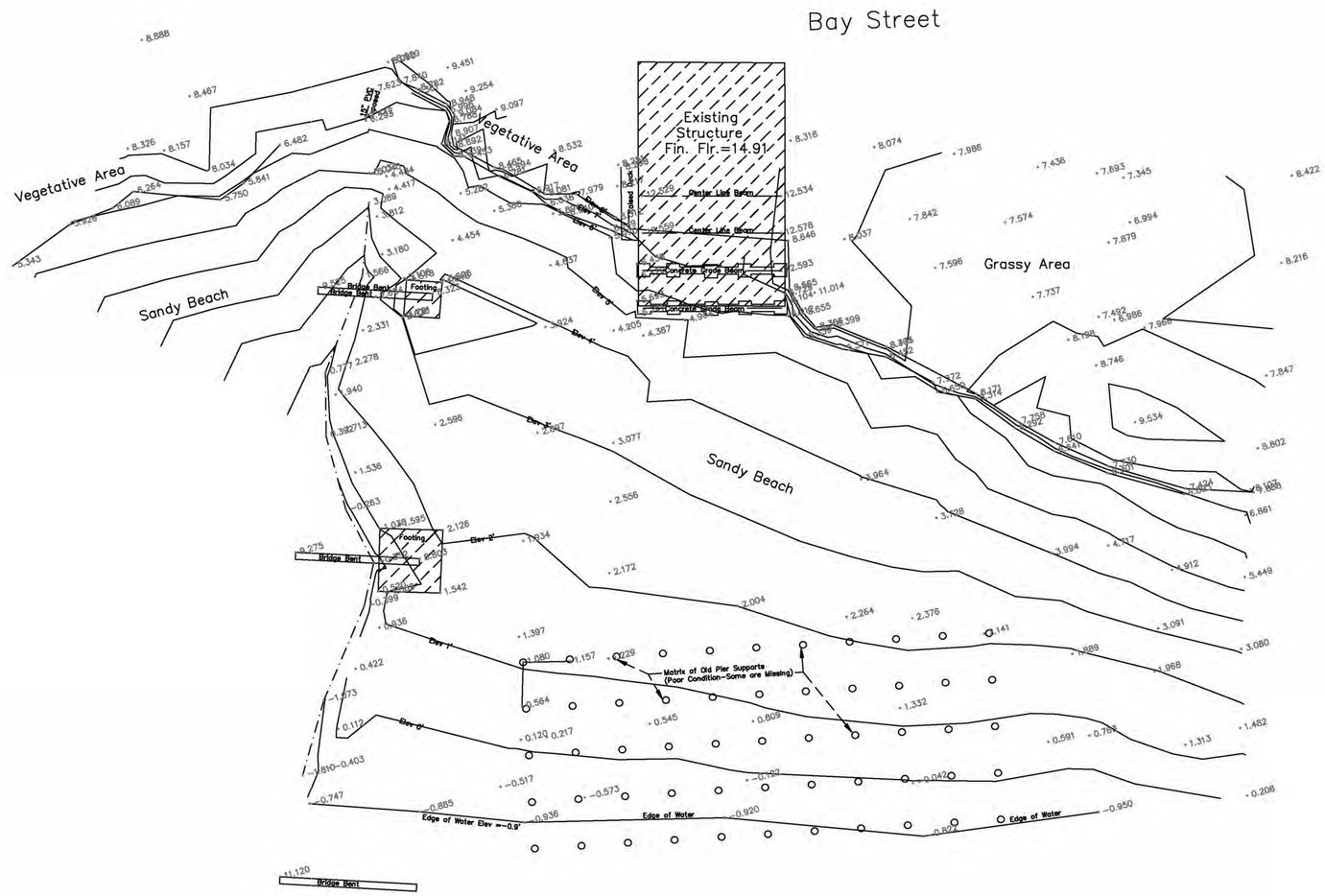

Survey By:
Pariani Land Surveying
136 W. Main Street
Eagle Point, OR 97524

Survey For:
PBS Engineering + Environmental
486 E Street, Suite B
Coos Bay, OR 97420

Basis of Bearing:
Assumed by Compass

Survey Data
Elevations are reference to the NGS published elevation of survey monument "FLORENCE", with a NAVD88 elevation of 34.43 feet.

Edge of water was tied in at approximate low tide between 10:00am and 10:30am on July 26, 2013.

Contour interval is 1 foot.

101 – Pacific Coast Highway

N
W E
S

0 10 20 40

REGISTERED PROFESSIONAL LAND SURVEYOR
OREGON
July 13, 1999
JOHN R. PARIANI
#51382
Renews: December 31, 2014

Existing Conditions Topo Survey

Pariani Land Surveying
136 West Main Street
Eagle Point, Oregon
541-890-1131

Date:	Scale:	Job No.:	Sheet:
July 31, 2013	1" = 20'	2013-145	1 of 1

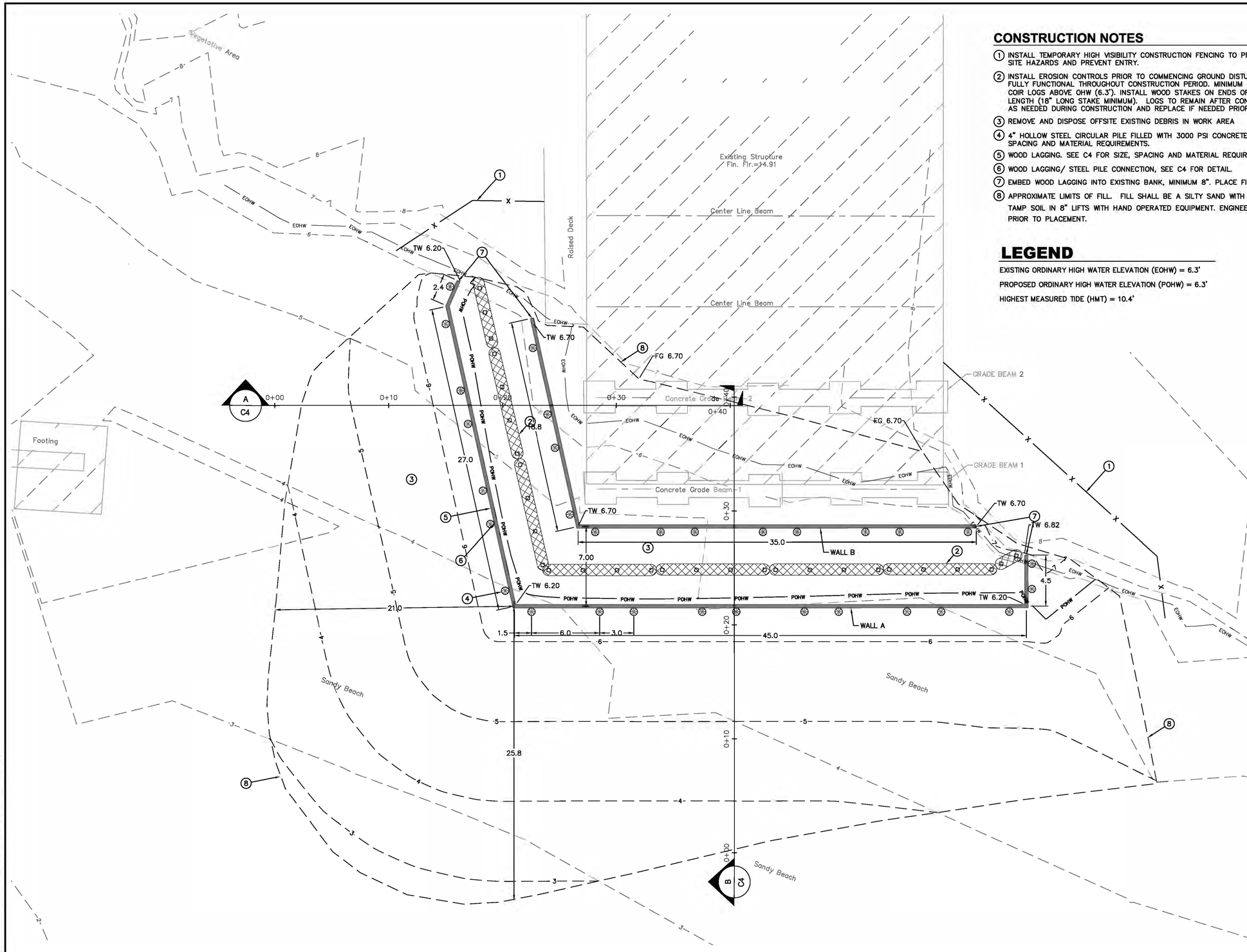

CONSTRUCTION NOTES

1. INSTALL TEMPORARY HIGH VISIBILITY CONSTRUCTION FENCING TO PROTECT PUBLIC FROM WORK SITE HAZARDS AND PREVENT ENTRY.
2. INSTALL EROSION CONTROLS PRIOR TO COMMENCING GROUND DISTURBING ACTIVITIES. MAINTAIN FULLY FUNCTIONAL THROUGHOUT CONSTRUCTION PERIOD. MINIMUM CONTROL IS SINGLE ROW OF COIR LOGS ABOVE OHW (6.3'). INSTALL WOOD STAKES ON ENDS OF LOG AND EVERY 3' OF LENGTH (18" LONG STAKE MINIMUM). LOGS TO REMAIN AFTER CONSTRUCTION. ADJUST GRADES AS NEEDED DURING CONSTRUCTION AND REPLACE IF NEEDED PRIOR TO COMPLETION OF PROJECT.
3. REMOVE AND DISPOSE OFFSITE EXISTING DEBRIS IN WORK AREA
4. 4" HOLLOW STEEL CIRCULAR PILE FILLED WITH 3000 PSI CONCRETE. SEE C4 FOR EMBEDMENT, SPACING AND MATERIAL REQUIREMENTS.
5. WOOD LAGGING. SEE C4 FOR SIZE, SPACING AND MATERIAL REQUIREMENTS.
6. WOOD LAGGING/ STEEL PILE CONNECTION, SEE C4 FOR DETAIL.
7. EMBED WOOD LAGGING INTO EXISTING BANK, MINIMUM 8". PLACE FILL AROUND END OF WALL.
8. APPROXIMATE LIMITS OF FILL. FILL SHALL BE A SILTY SAND WITH A MAX PARTICLE SIZE OF 2". TAMP SOIL IN 8" LIFTS WITH HAND OPERATED EQUIPMENT. ENGINEER TO APPROVE FILL MATERIAL PRIOR TO PLACEMENT.

LEGEND

EXISTING ORDINARY HIGH WATER ELEVATION (EOHW) = 6.3'

PROPOSED ORDINARY HIGH WATER ELEVATION (POHW) = 6.3'

HIGHEST MEASURED TIDE (HMT) = 10.4'

PBS
Engineering + Environmental
486 E Street
Suite B
Coos Bay, OR 97420
541.266.8200 Main
866.727.0140 Fax
www.pbsenv.com

REGISTERED PROFESSIONAL ENGINEER 13475 PRELIMINARY NOT FOR CONSTRUCTION JAN. 15, 1987 GEORGE L. DRAKE

EXPIRES:

SIERRA FOUNDATION REPAIR

SITE IMPROVEMENT PLAN

KENNETH SIERRA
1236 BAY STREET
FLORENCE, OREGON

NO.	REVISION	BY	DATE	CHK

PROJECT:	90036.001
DRAWN:	JK
CHECKED:	GD, PS
DATE:	MARCH 2014
DWG NO.	C3
SHEET NO.	3 OF 4

L:\Projects\90000\90036.001_Sierra\Foundation\Revision\2013\Civil\2013\90036.001_C3.dwg Mar 07, 2014 02:12pm stevenj

ENCL

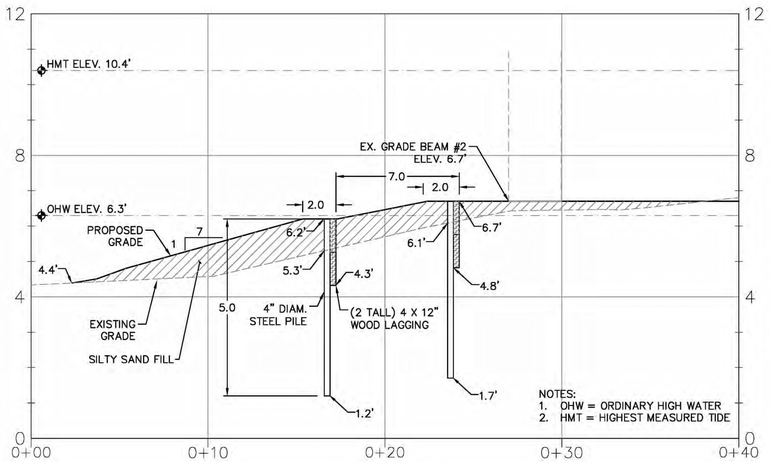

SECTION A

SCALE: 1"=4' HORIZONTAL
1"=2' VERTICAL

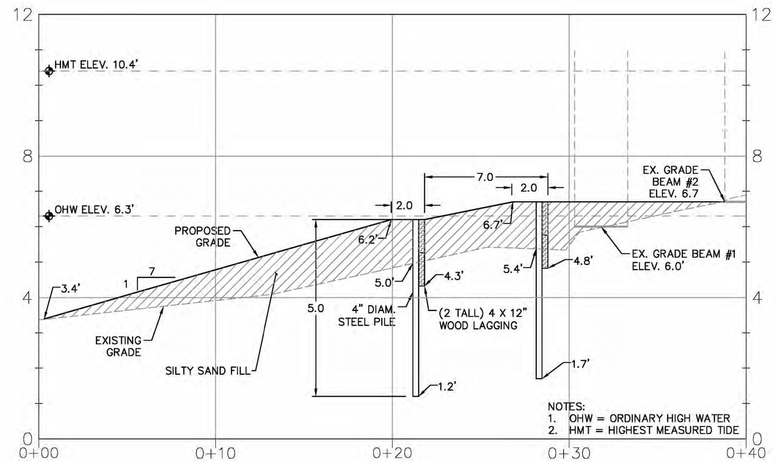

SECTION B

SCALE: 1"=4' HORIZONTAL
1"=2' VERTICAL

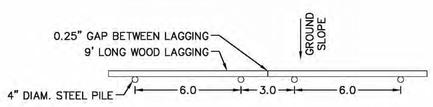

PILE SPACING

SCALE: 1" = 2'

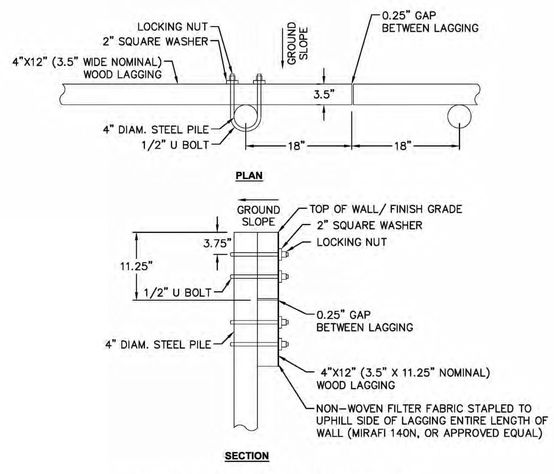

PILE/ LAGGING CONNECTION

SCALE: 2"=1'

SIERRA FOUNDATION REMOVAL/FILL QUANTITIES					
		FILL			
ELEVATION	REMOVAL (CY)	SILTY SAND (CY)	STEEL PIPE PILES (EA.)	CONCRETE PIPE PILE FILL (CY)	WOOD LAGGING (LF)
BELOW OHW	0	69	17	0.26	74
ABOVE OHW, BELOW HMT	0	27	14	0.22	58
ABOVE OHW	0	0	0	0.00	0
TOTAL	0	96	31	0.48	132

PREFERRED MATERIALS	
ITEM	MATERIAL
WOOD LAGGING	CEDAR
HARDWARE TO MOUNT LAGGING TO PILE	STAINLESS STEEL
4" STEEL PILE	0.43" THICK WALL GALVANIZED STEEL BACKFILLED WITH CONCRETE
FILTER FABRIC	MIRAFI 140N

PBS
Engineering + Environmental
486 E Street
Suite B
Coos Bay, OR 97420
541.266.8200 Main
866.727.0140 Fax
www.pbsenv.com

REGISTERED PROFESSIONAL ENGINEER 13475 PRELIMINARY OR CONSTRUCTION FEB. 15, 1987 GEORGE L. DRAKE

EXPIRES:

SIERRA FOUNDATION REPAIR

SECTIONS & DETAILS

KENNETH SIERRA
1236 BAY STREET
FLORENCE, OREGON

NO.	REVISION	BY	DATE	CHK

PROJECT: 90036.001
DRAWN: JK
CHECKED: GD, PS
DATE: MARCH 2014
DWG NO. C4
SHEET NO. 4 OF 4

ENCL