THIS MAP WAS PREPARED FOR ASSESSMENT PURPOSE ONLY

NE1/4 SEC. 6 T26S R12W W.M.
COOS COUNTY
1" = 200'

26S 12W 06A
CANCELLED NO.
101
105
801

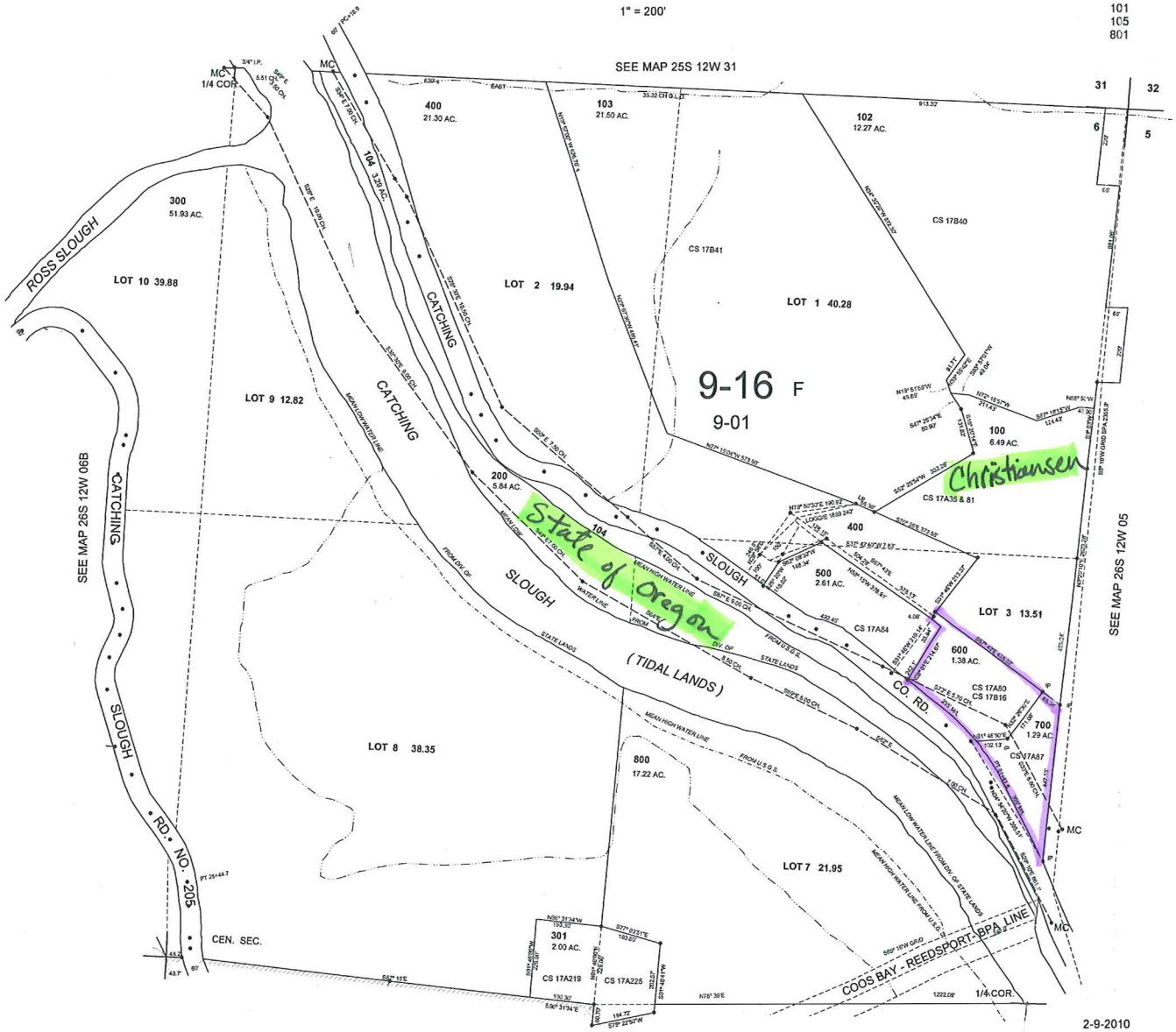

= Mosieur Property

Mosieur Temp./Emergency Tidegate
Coos County Road Dept.
December 26, 2012

THIS MAP WAS PREPARED FOR ASSESSMENT PURPOSE ONLY

SECTION 5 T26S R12W W.M.
COOS COUNTY
1" = 400'

26S 12W 05

CANCELLED NO.
501

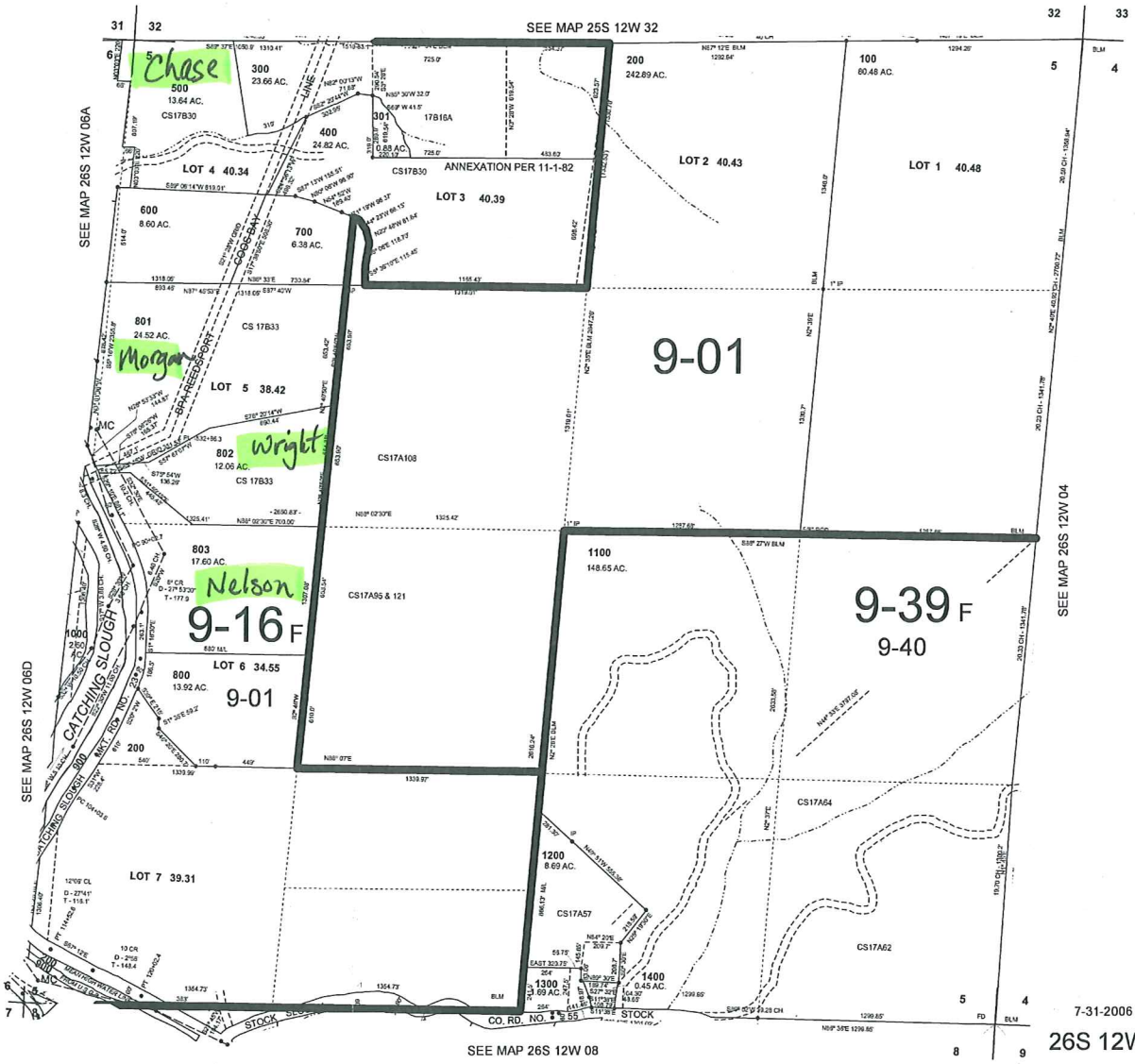

7-31-2006

26S 12W 05

Mosieur Temp./Emergency Tidegate
Coos County Road Dept.
December 26, 2012

"PLAN VIEW & Section VIEW"

1" = 10' SCALE

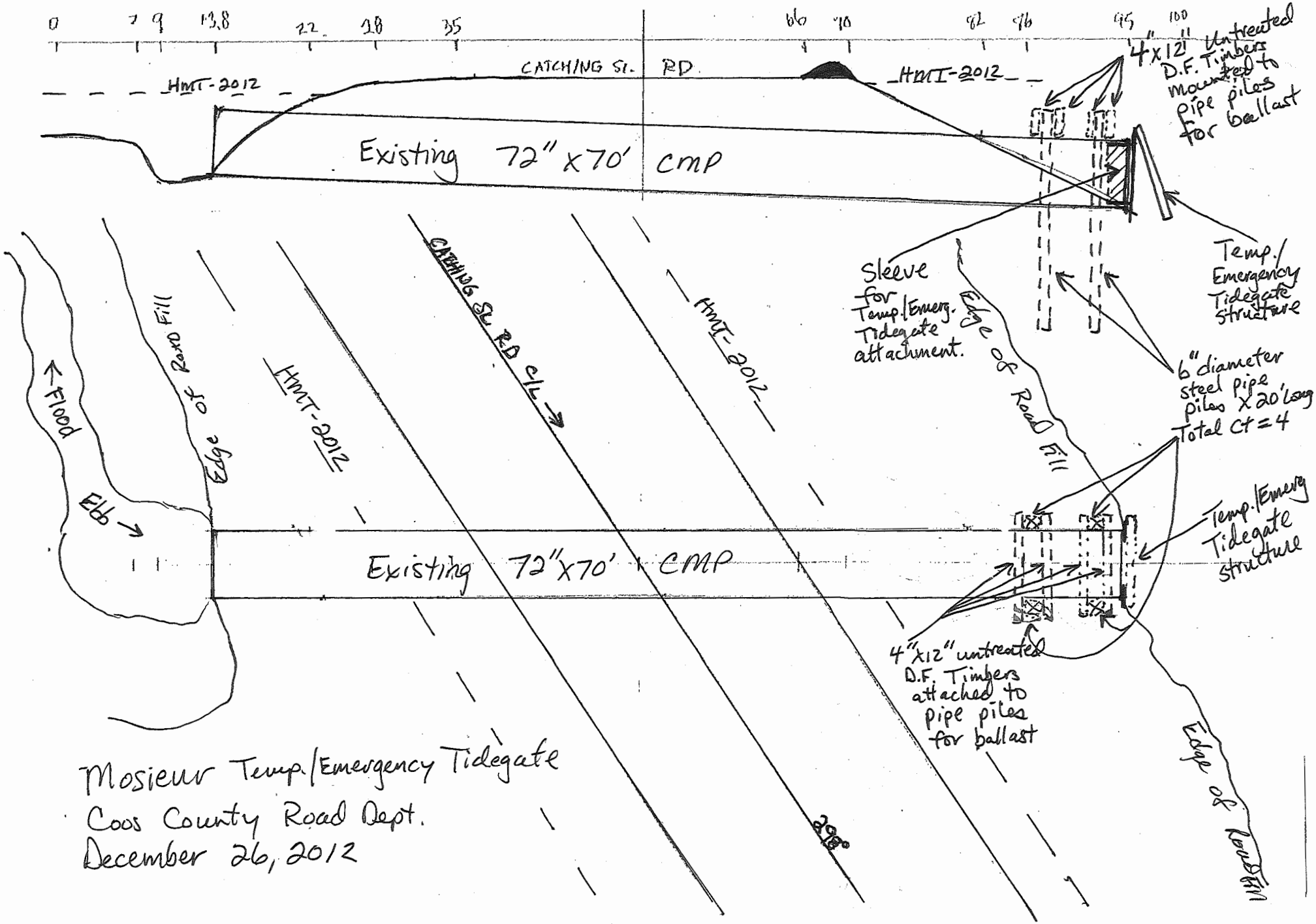

Mosieur Temp./Emergency Tidegate
Coos County Road Dept.
December 26, 2012

"FACE PLATE & SLEEVE"

Scale 1/2" = 1'

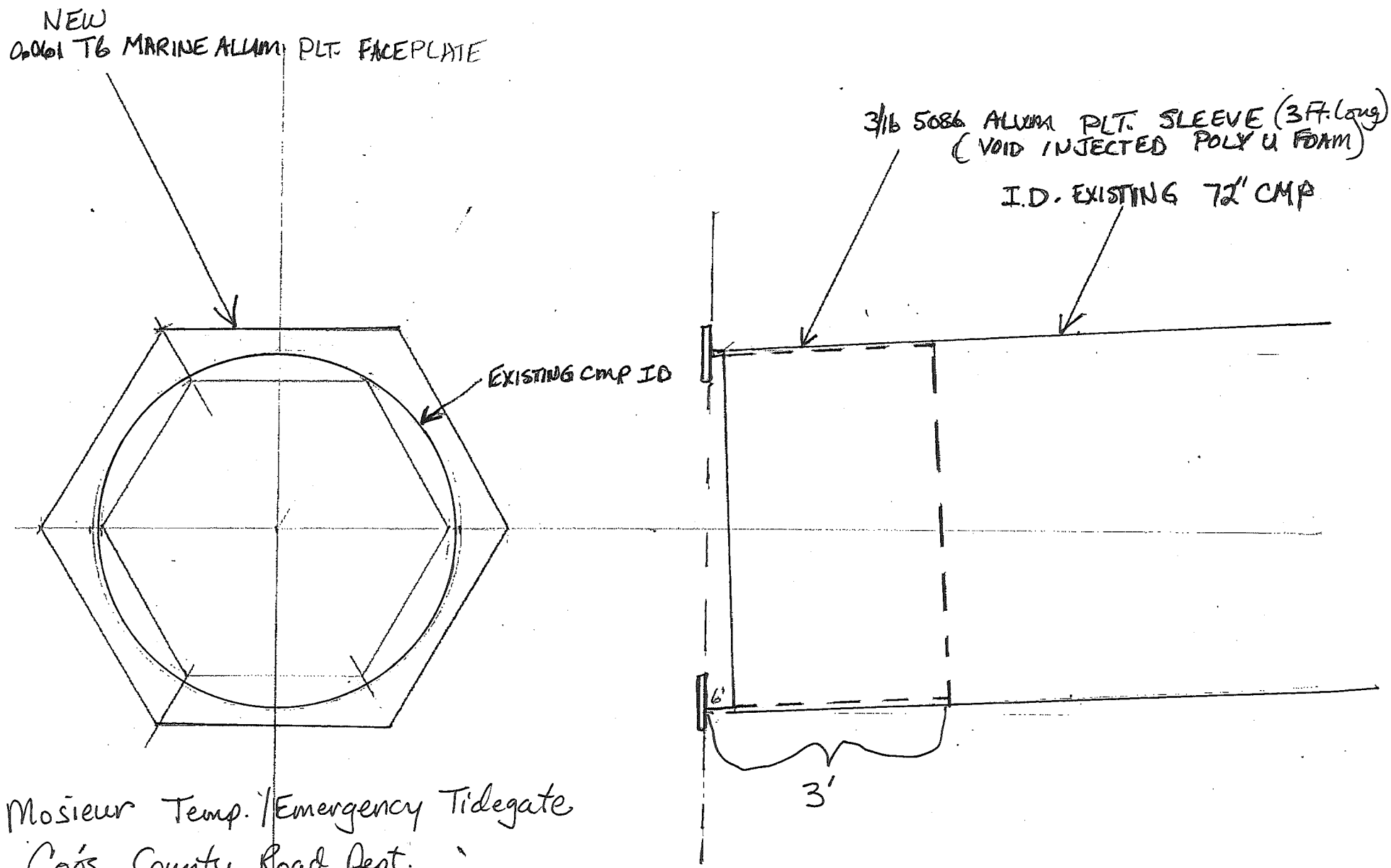

Mosieur Temp. / Emergency Tidegate
Coos County Road Dept.
December 26, 2012

"Tidegate - Front View"

Scale
3/4" = 1.25'

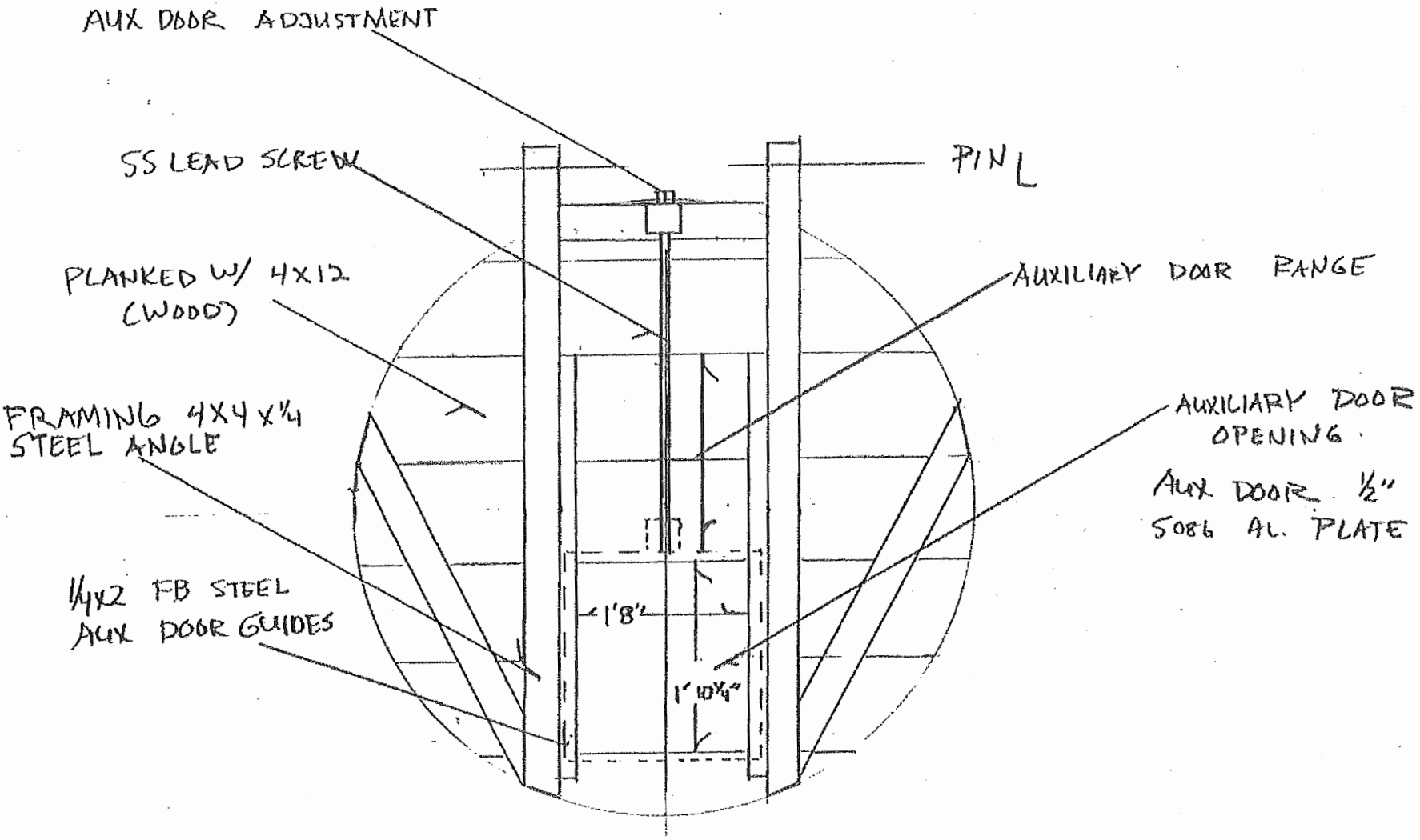

MOSIEUR TEMP EMERGENCY TIDE GATE
Coos County Road Dept.
December 26, 2012