STUDY AREA IS LOCATED
WITHIN THE NW $\frac{1}{4}$ OF
S4, T9S, R5W, WM
POLK COUNTY, OREGON

FIGURE 1 – SITE LOCATION MAP
COOPER CREEK VINEYARDS, LLC

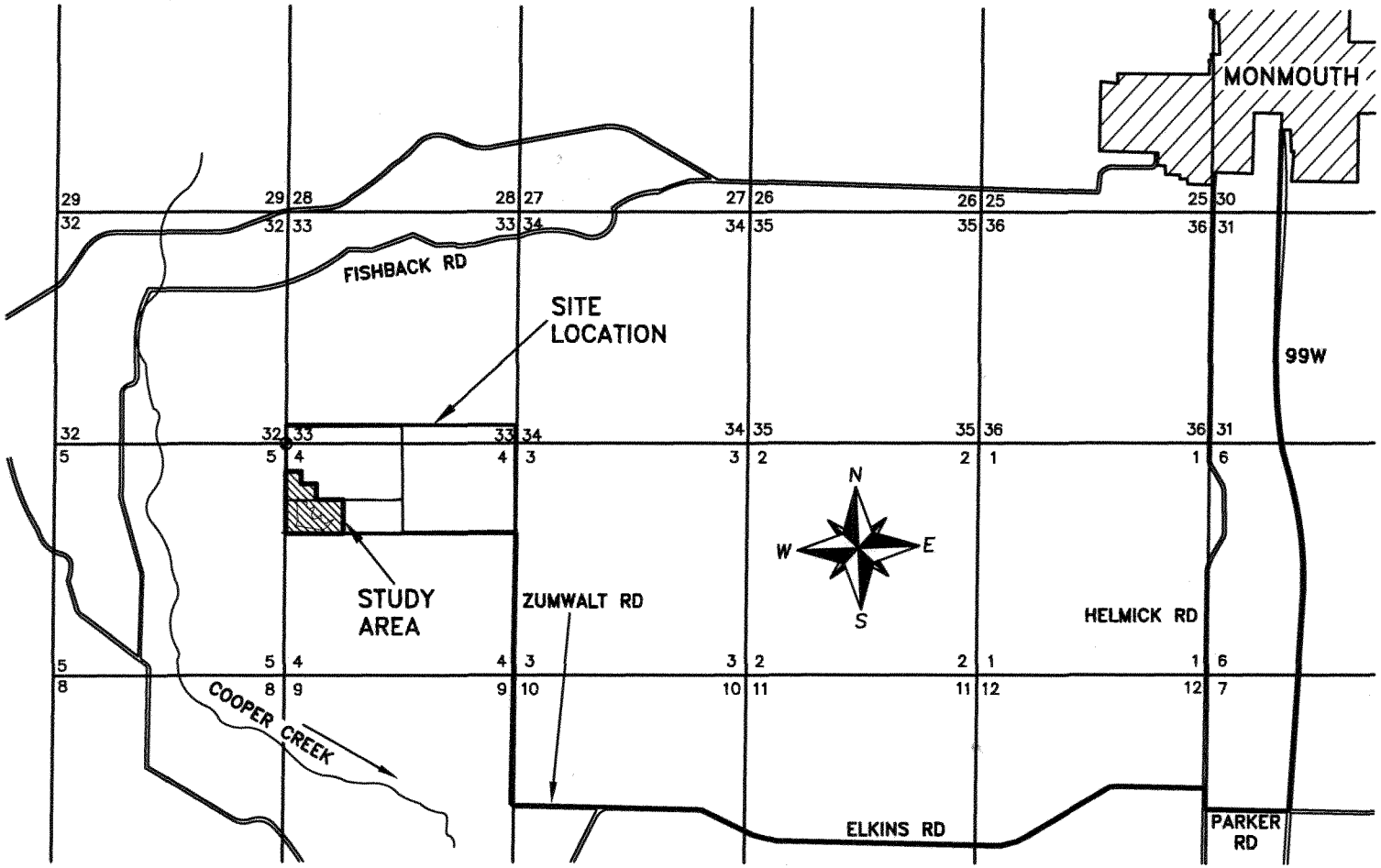

SCALE: 1" = $\frac{3}{4}$ MILE

THE ROADS WITH A SOLID FILL DENOTE THE DIRECTIONS TO THE SITE FROM MONMOUTH.

Stuntzner Engineering & Forestry, LLC

Project: 307-2-151
Drawing: 3072151M WETLAND.dwg
By: CVB/WPK
Checked by: EAU
Date: 08-05-08
Rev.: 01-16-09

THIS MAP WAS PREPARED FOR THE PURPOSE OF IDENTIFYING THE LOCATION OF THE SITE AND STUDY BOUNDARY ONLY AND IS NOT INTENDED TO PROVIDE LEGAL DIMENSIONS OR LOCATION OF PROPERTY OWNERSHIP LINES.

FIGURE 1a – SITE PLAN

Tax Lots 101 & 103, Section 4, T9S, R5W, WM
Polk County, Oregon
Land Owner: Cooper Creek Vineyards, LLC

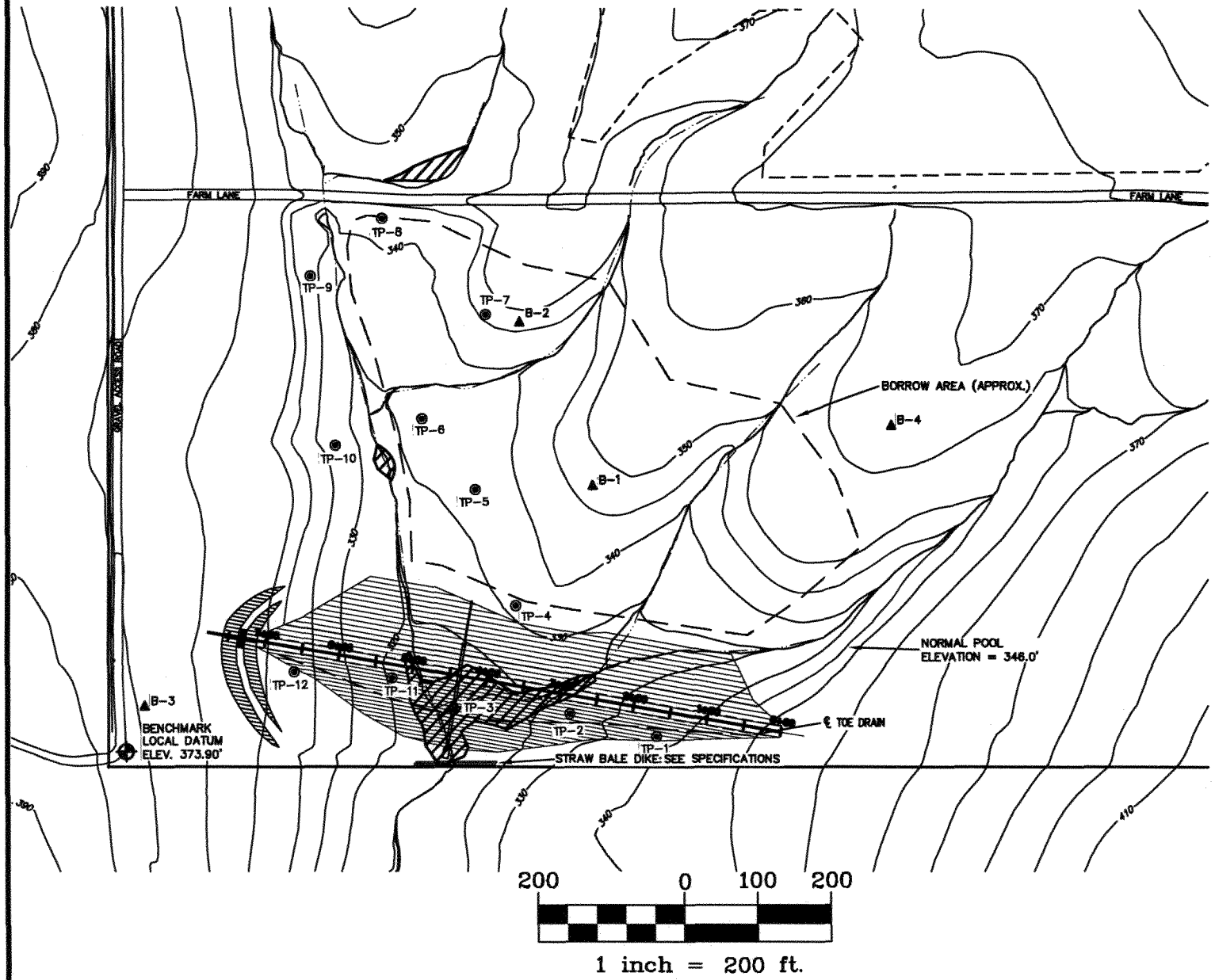

Stuntzner Engineering & Forestry, LLC

Project: 307-2-151
Drawing: 3072151K RES.dwg
By: CVB/WPK
Checked by: EAU
Date: 08-19-08

FIGURE 1b
PROPOSED DAM CROSS SECTION

Tax Lots 101 & 103, Section 4, T9S, R5W, WM
Polk County, Oregon
Land Owner: Cooper Creek Vineyards, LLC

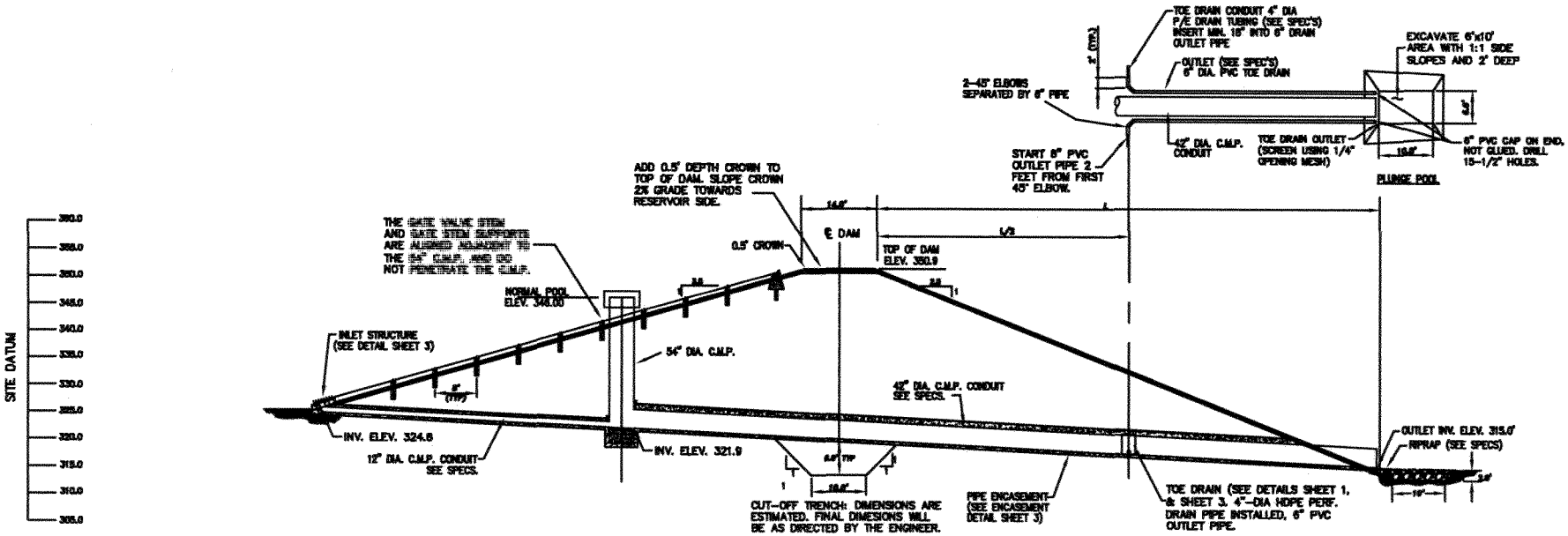

30 0 30

SCALE: 1" = 30'

Stuntzner Engineering & Forestry, LLC

Project: 307-2-151
Drawing: 3072151K RES.dwg
By: CVB/WPK
Checked by: EAU
Date: 08-19-08

FIGURE 1c

[PORTION OF 9.5.4]

SEC.4 T9S R5W WM
POLK COUNTY

Scale 1" = 400'

IMPORTANT
This Map for Assessment and Taxation Purposes
ONLY

N

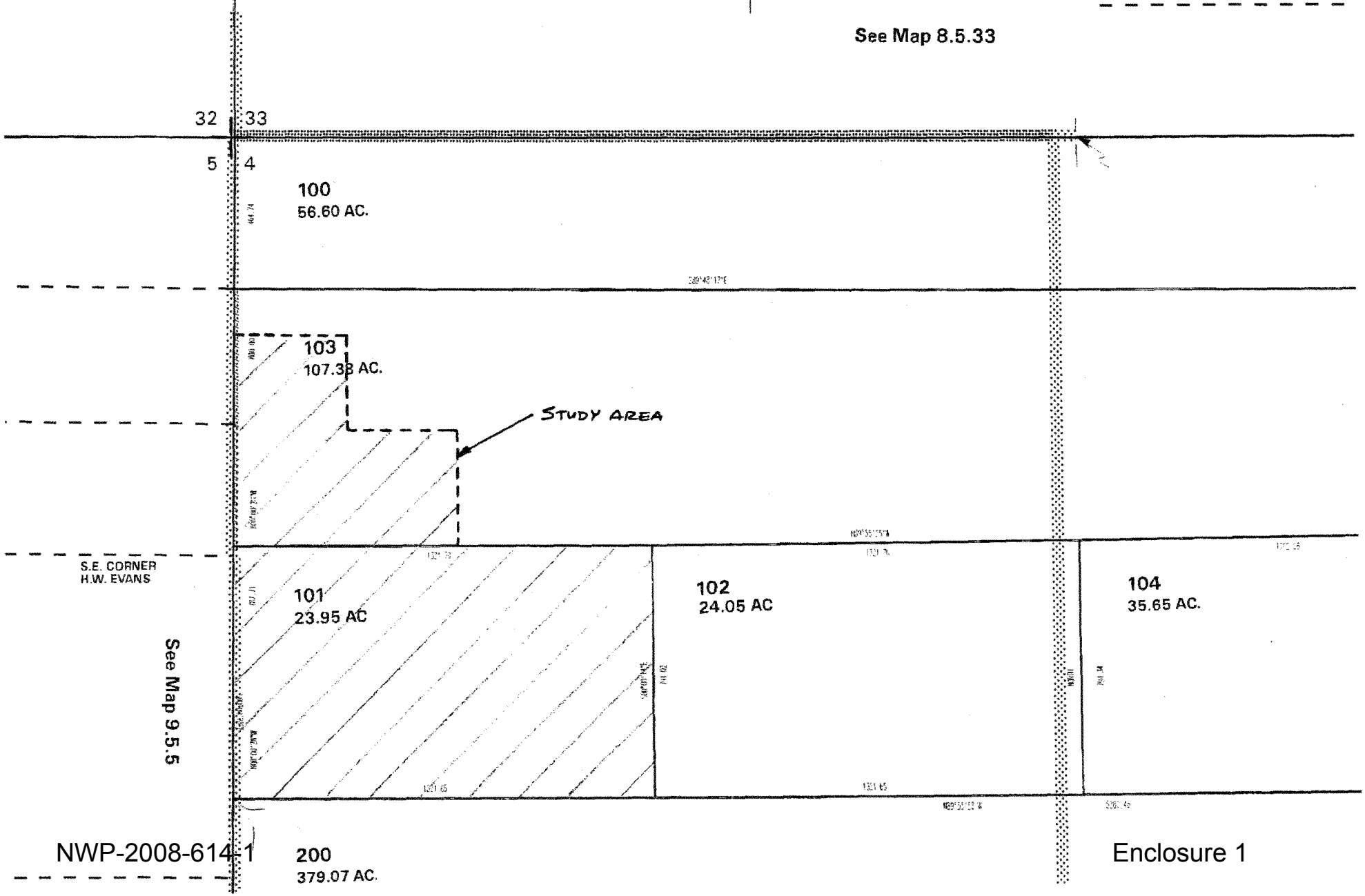

NWP-2008-614-1

Enclosure 1

FIGURE 1d

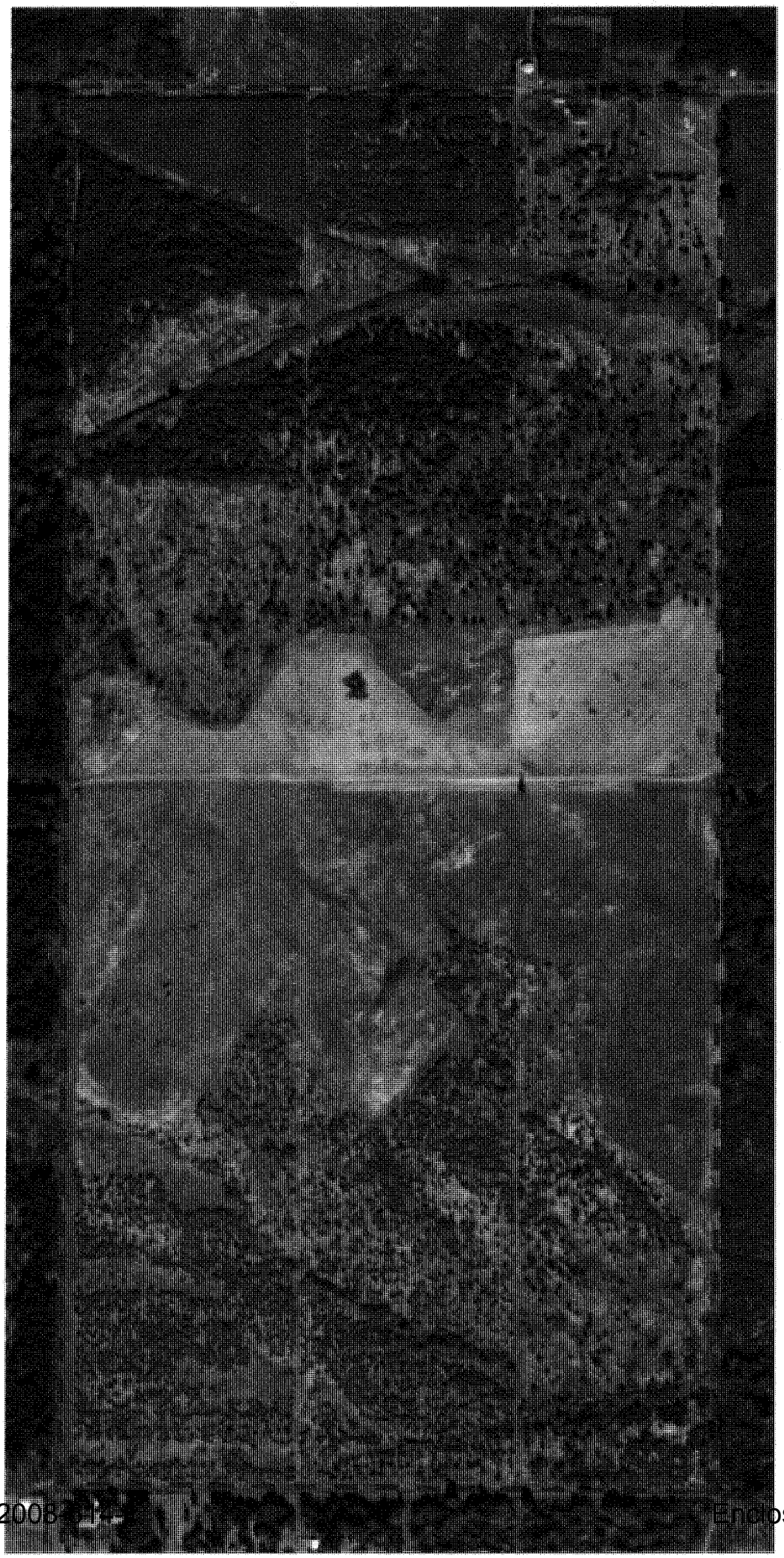

FIGURE 2a – WETLAND MITIGATION MAP (SOUTH)

Cooper Creek Vineyards, LLC

T9S, R5W, WM
Sec. 4, Taxlot 101 & part of Taxlot 103
Polk County, Oregon

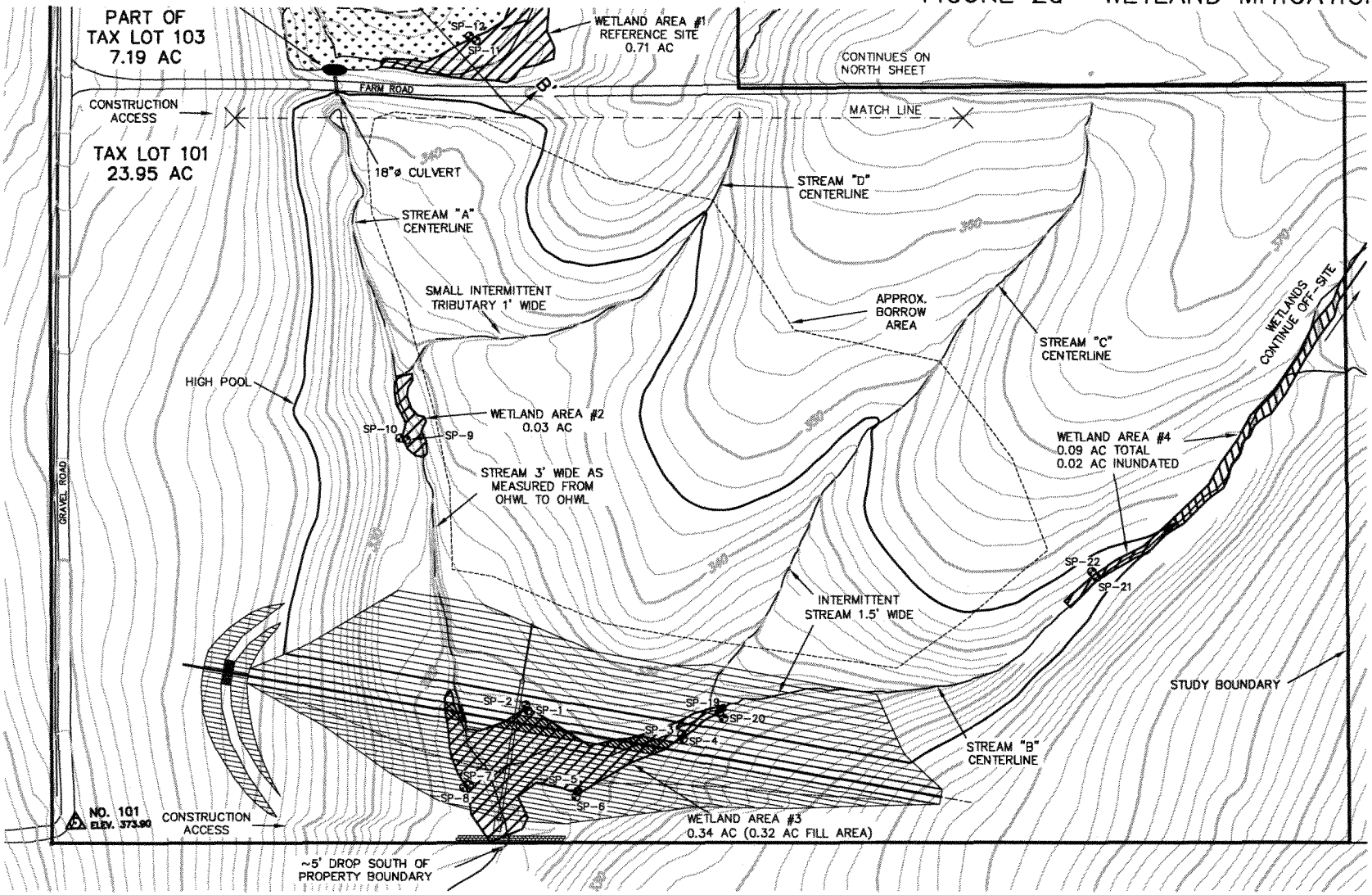

WETLAND BOUNDARIES SURVEYED WITH TOPCON S6 TOTAL STATION ± 0.1' ACCURACY.

THIS MAP WAS PREPARED FOR THE PURPOSE OF IDENTIFYING THE LOCATION OF WETLAND ONLY AND IS NOT INTENDED TO PROVIDE LEGAL DIMENSIONS OR LOCATION OF PROPERTY OWNERSHIP LINES.

N W E S

100 0 50 100
1 inch = 100 ft.

Wetland Area
Removal Area (Cut-off Trench)

Base Maps:
Tax Assessor Maps 8S 5 33; 9S 5 4 &
2008 30I Aerial Photo

Stuntzner Engineering & Forestry, LLC

Project: 307-2-151
Drawing: 3072151M
WETLAND.dwg
By: WPK
Checked by: EAU
Date: 08-05-08
Rev.: 01-30-09

FIGURE 3
TYPICAL INTERMITTENT STREAM CROSS SECTION (A–A')

Tax Lots 101 & 103, Section 4, T9S, R5W, WM
Polk County, Oregon
Land Owner: Cooper Creek Vineyards, LLC
Project: Intermittent Steam Mitigation for Reservoir

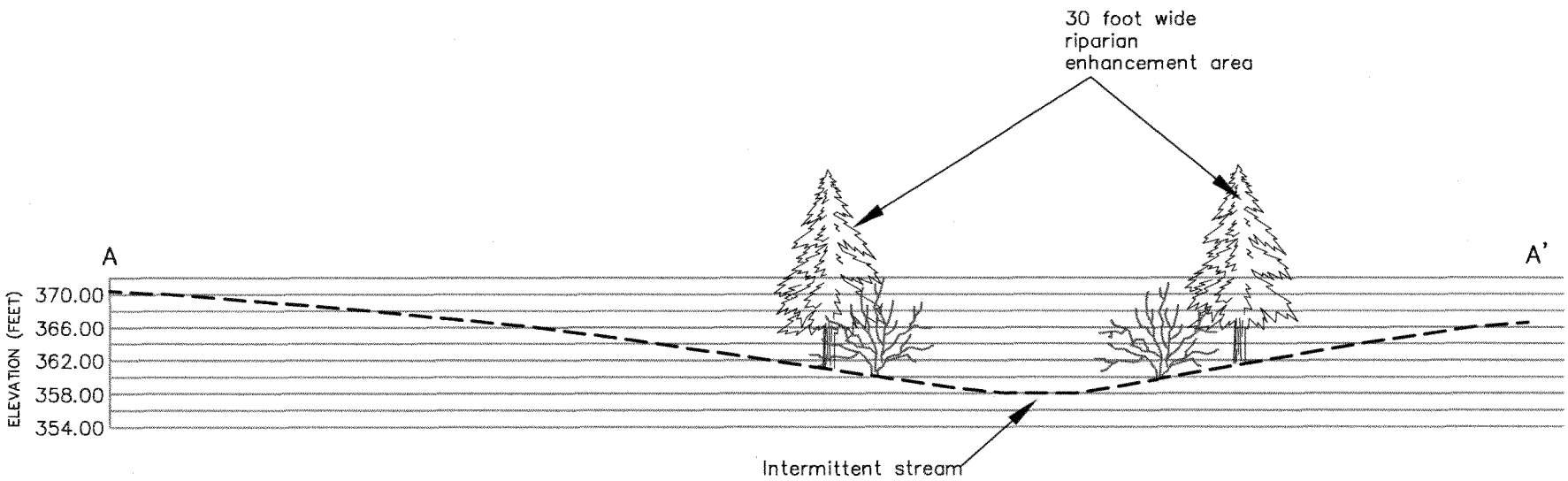

Riparian Tree Plantings

Scrub/Shrub Plantings

— — — — Existing Ground

Stuntzner Engineering & Forestry, LLC

Project: 307–2–151
Drawing: 3072151L
WETLAND.dwg
By: CVB/WPK
Checked by: EAU
Date: 08–05–08

FIGURE 4
TYPICAL WETLAND CREATION CROSS SECTION (B–B')

Tax Lots 101 & 103, Section 4, T9S, R5W, WM
Polk County, Oregon
Land Owner: Cooper Creek Vineyards, LLC
Project: Wetland Creation Mitigation for Reservoir

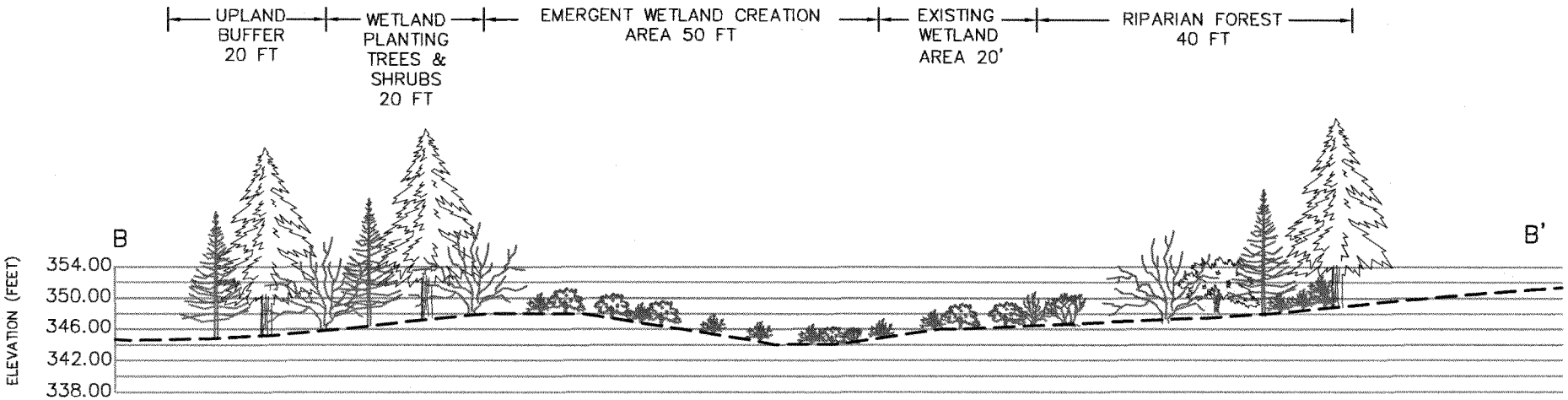

Wetland Tree Plantings

Scrub/Shrub Plantings
Emergent Area Plantings

Existing Ground

Stuntzner Engineering & Forestry, LLC

Project: 307–2–151
Drawing: 3072151L
WETLAND.dwg
By: CVB/WPK
Checked by: EAU
Date: 08–05–08

FIGURE 5
CONTROL STRUCTURE DETAIL

Tax Lots 101 & 103, Section 4, T9S, R5W, WM
Polk County, Oregon

Land Owner: Cooper Creek Vineyards, LLC

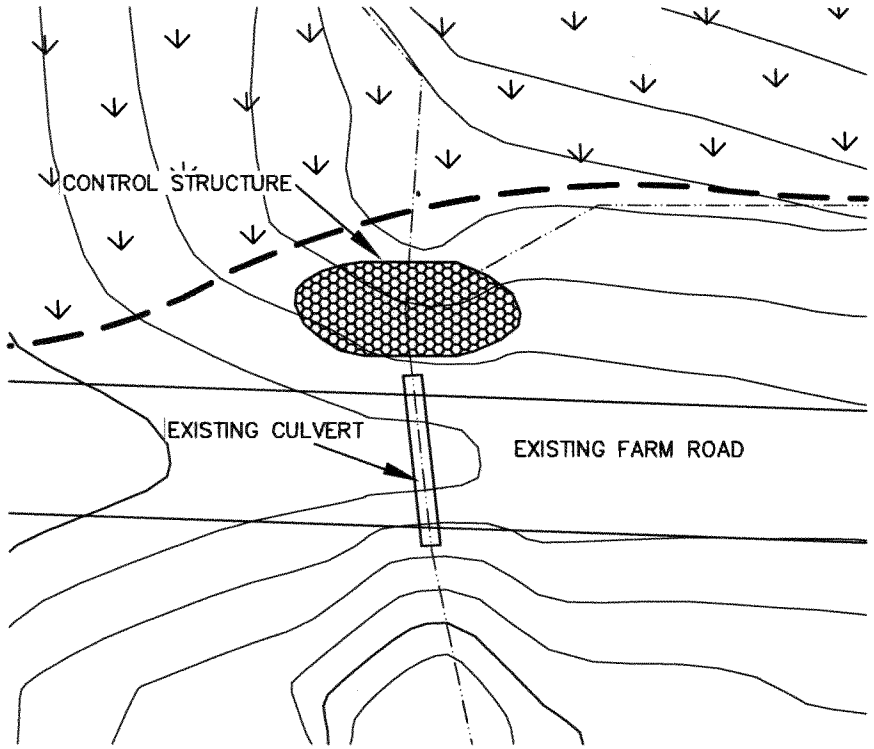

PLAN VIEW

20 0 10 20

1 inch = 20 ft.

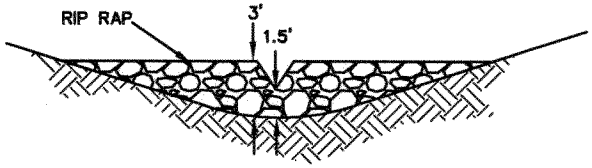

PROFILE–LOOKING UPSTREAM

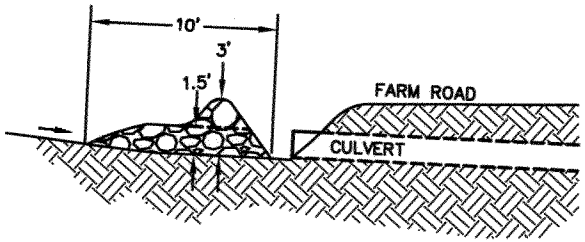

PROFILE–SIDE

10 0 5 10

1 inch = 10 ft.

Stuntzner Engineering & Forestry, LLC

Project: 307–2–151
Drawing: 3072151L WETLAND.dwg
By: CVB/WPK
Checked by: EAU
Date: 08–19–08

FIGURE 6

U.S.G.S. topographic map

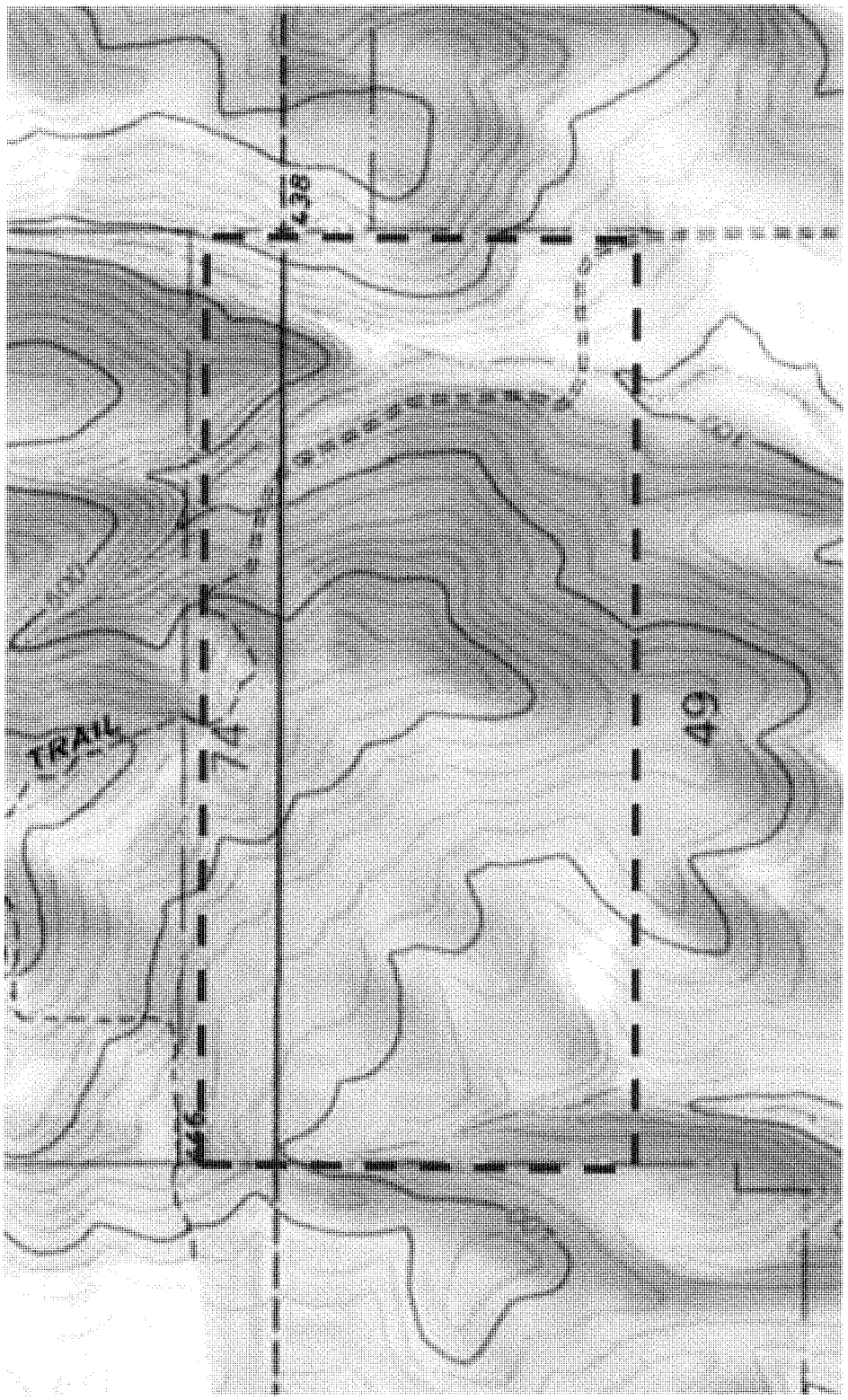

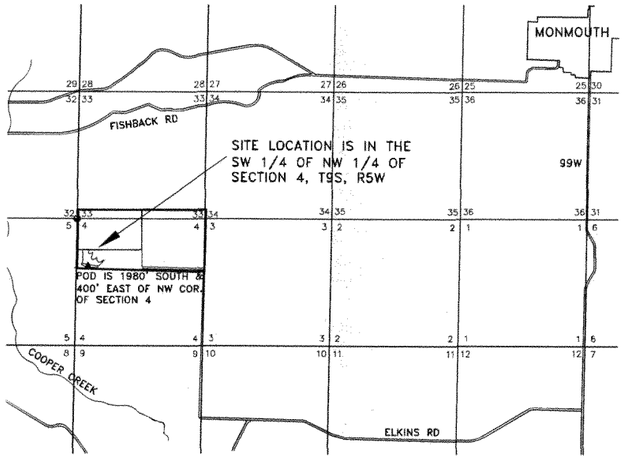

SITE LOCATION MAP
1" = 1/2 MILE

2640 0 1320 2640
1 inch = 2640 ft.

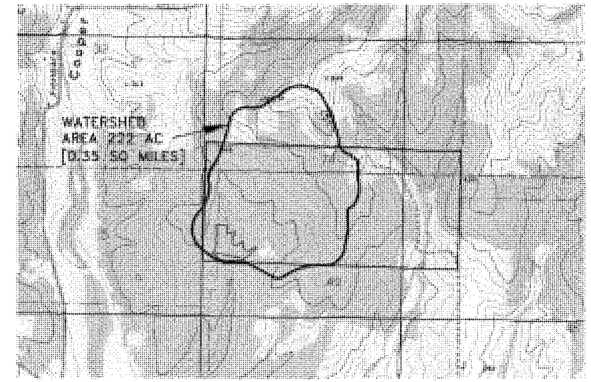

WATERSHED LOCATION MAP
1" = 1/4 MILE

1320 0 660 1320
1 inch = 1320 ft.

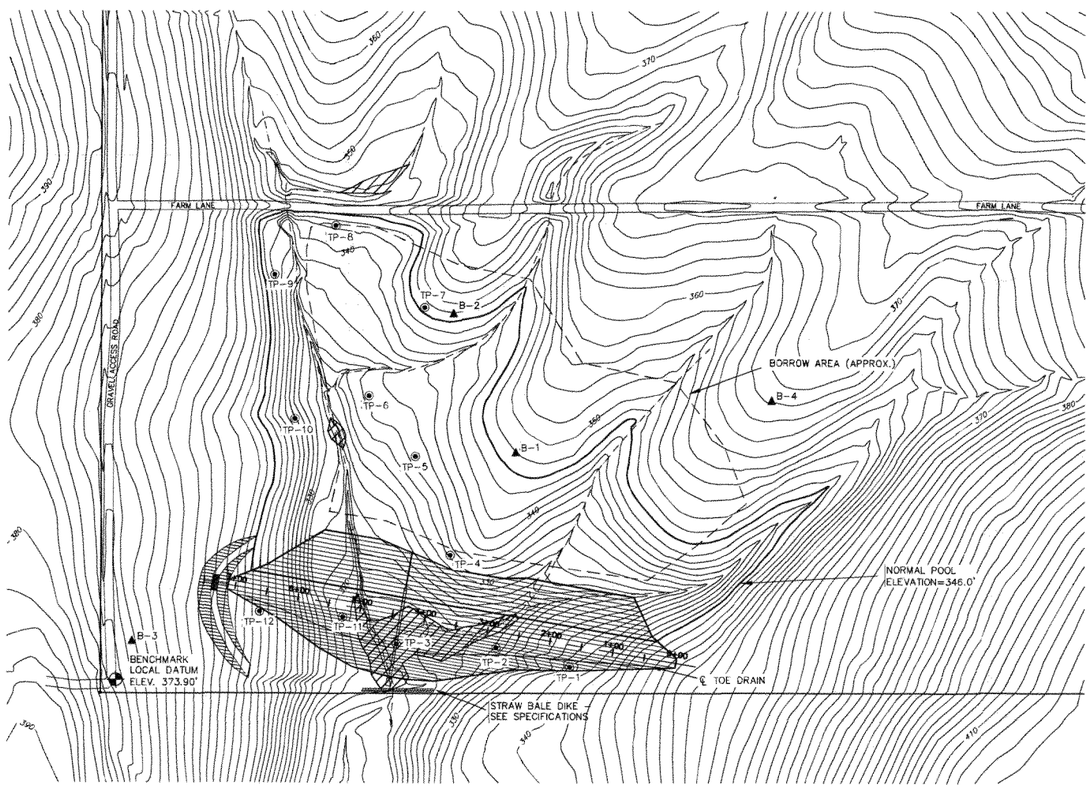

N

ELEVATIONS ARE BASED ON LOCAL DATUM

100 0 50 100
1 inch = 100 ft.

CONTOUR INTERVALS:
EXISTING GROUND: 2 FT
PROPOSED DAM: 2 FT

POD IS 1980 FT SOUTH, AND 400 FT EAST OF NW CORNER OF SECTION 4.
44°49'11"N
123°18'54"W

◉ TEST PIT LOCATION
▲ SOIL BORING LOCATION

WETLAND MITIGATION AREAS [3]: MITIGATION PLAN SUBMITTED TO OREGON DSL AND ARMY CORPS OF ENGINEERS.
A COPY OF THE MITIGATION PLAN IS AVAILABLE BY REQUEST THROUGH STUNTZNER ENGINEERING & FORESTRY, LLC

HYDROLOGIC DATA SUMMARY

WATERSHED AREA = 222 ACRES — WEIGHTED RCN = 88
STORM DISTRIBUTION TYPE IA — T_C = 24 MINUTES

STORM FREQ. YEARS	PRECIP. [INCHES]	PEAK INFLOW [CFS]	PEAK RISER OUTFLOW [CFS]	PEAK SPLWY. OUTFLOW [CFS]	TOTAL OUTFLOW [CFS]	MAX POOL ELEV.
25	5.5	197.0	90.5	0	90.5	347.7
100	6.3	233.6	103.5	3.1	106.6	347.9

STUNTZNER ENGINEERING & FORESTRY, LLC MAKES NO REPRESENTATION AS TO THE EXISTENCE OR NON-EXISTENCE OF UTILITIES. IT IS THE RESPONSIBILITY OF THE CONTRACTOR TO COMPLY WITH THE PROVISIONS OF ORS 757.541 TO 757.571. THE CONTRACTOR WILL BE RESPONSIBLE FOR ANY DAMAGE RESULTING FROM DISRUPTION OF SERVICE CAUSED BY CONSTRUCTION ACTIVITIES.

PREPARED FOR:
COOPER CREEK VINEYARDS, LLC
PO BOX 3989
NAPA, CA, 94558

COOPER CREEK RESERVOIR
7855 ZUMWALT RD
MONMOUTH, OR, 97361
RESERVOIR SITE PLAN

Stuntzner Engineering & Forestry, LLC
ENGINEERING • LAND SURVEYING • FORESTRY
PLANNING • WATER RIGHTS
TEL: (503) 357-5717
FAX: (503) 357-5698
2137 19th AVENUE
FOREST GROVE, OREGON 97116

REGISTERED PROFESSIONAL ENGINEER #81361 OREGON DEC 15, 2006 WILLIAM PATRICK KNESS
EXPIRES 6/30/09

DRAWN BY: C. VAN BUREN
CHECKED BY: W. KNESS
DATE: 9-27-08
REVISED:
JOB NAME: PPV COOPER CREEK
DWG. NAME: 3072151K RES.dwg
JOB No.: 307-2-151 SHEET 1 of 4

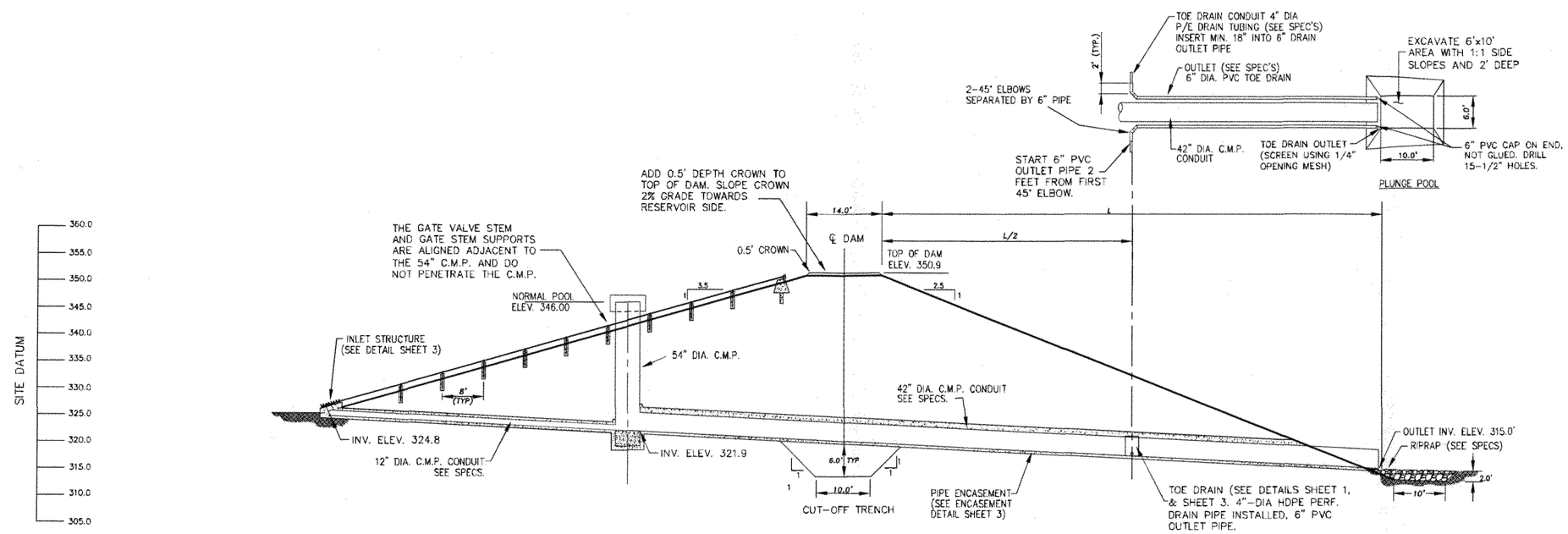

CROSS SECTION AT OUTLET CONDUIT

10 0 5 10
1 inch = 10 ft.

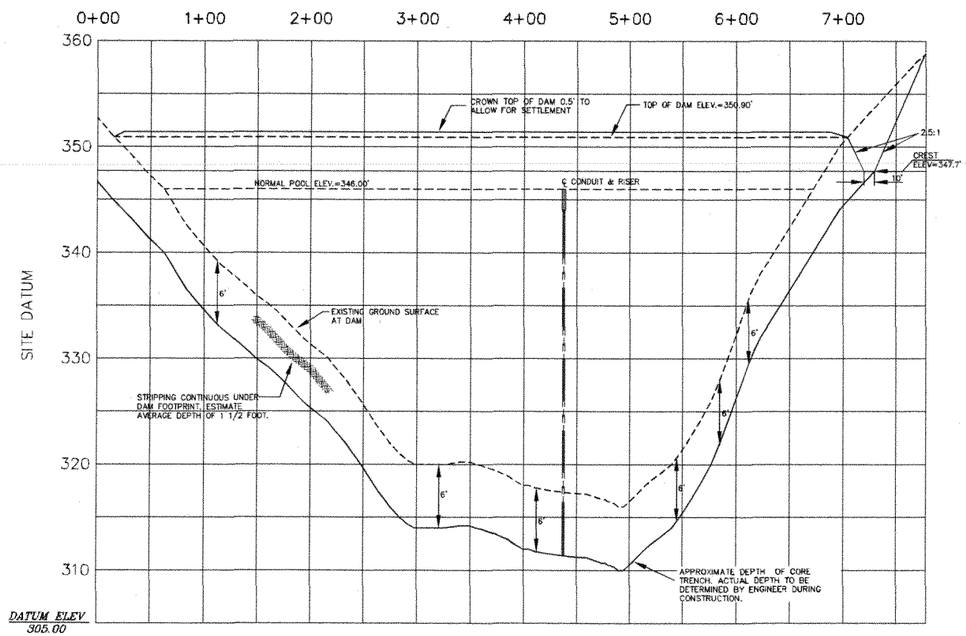

PROFILE ON ℄ DAM LOOKING DOWNSTREAM

SCALE: 1"=50' / VERT: 1"=5'

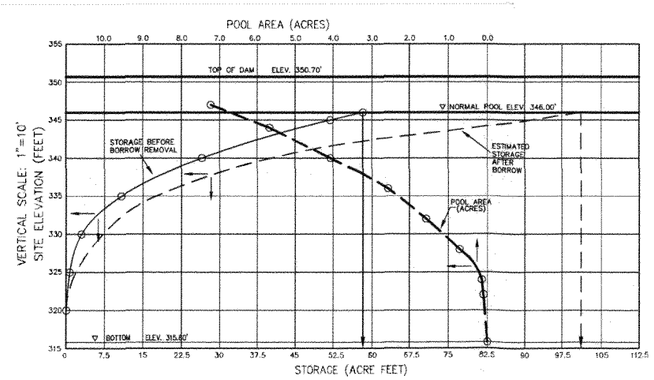

STAGE-STORAGE DATA

STUNTZNER ENGINEERING & FORESTRY, LLC MAKES NO REPRESENTATION AS TO THE EXISTENCE OR NON-EXISTENCE OF UTILITIES. IT IS THE RESPONSIBILITY OF THE CONTRACTOR TO COMPLY WITH THE PROVISIONS OF ORS 757.541 TO 757.571. THE CONTRACTOR WILL BE RESPONSIBLE FOR ANY DAMAGE RESULTING FROM DISRUPTION OF SERVICE CAUSED BY CONSTRUCTION ACTIVITIES.

PREPARED FOR:
COOPER CREEK VINEYARDS, LLC
PO BOX 3989
NAPA, CA, 94558

COOPER CREEK RESERVOIR
7855 ZUMWALT RD
MONMOUTH, OR, 97361
RESERVOIR PROFILES

Stuntzner Engineering & Forestry, LLC
ENGINEERING • LAND SURVEYING • FORESTRY
PLANNING • WATER RIGHTS
2197 19th AVENUE
FOREST GROVE, OREGON 97116
TEL: (503) 357-5717
FAX: (503) 357-5698

REGISTERED PROFESSIONAL ENGINEER #81361 OREGON NOV 13, 1986 WILLIAM PATRICK KNESS
EXPIRES 6/30/09

DRAWN BY:	C. VAN BUREN
CHECKED BY:	W. KNESS
DATE:	9-27-08
REVISED:	
JOB NAME:	PPV COOPER CREEK
DWG. NAME:	3072151K RES.dwg
JOB No.: 307-2-151	SHEET 2 OF 4

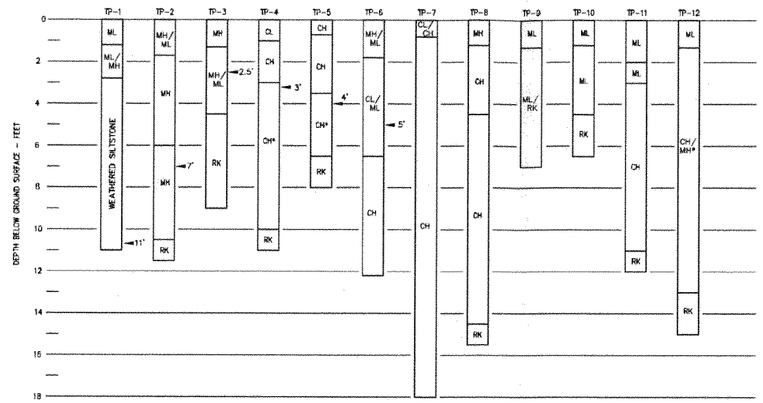

TEST PIT GEOLOGICAL LOGS

◉ TEST PIT LOCATIONS SHOWN ON SHEET 1

→ DENOTES WATER SEEPAGE INTO TEST PIT ON 02/07/08.

CLASSIFIED BY THE UNIFIED CLASSIFICATION SYSTEM (USCS) ASTM D-2487. CLASSIFICATIONS ARE GEOLOGISTS FIELD CLASSIFICATION (OR FROM LABORATORY TEST DATA WHERE AVAILABLE*). A COMPLETE COPY OF THE GEOLOGISTS REPORT AND LAB TEST DATA IS AVAILABLE BY REQUEST THROUGH STUNTZNER ENGINEERING & FORESTRY, LLC.

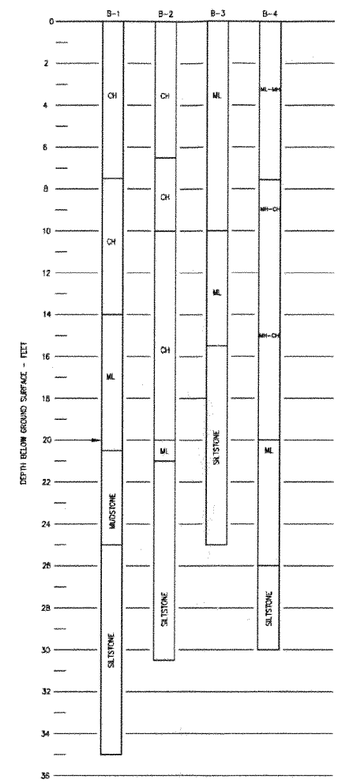

SOIL BORING GEOLOGICAL LOGS

▲ SOIL BORING LOCATIONS SHOWN ON SHEET 1

► DENOTES SATURATED SOIL CONDITIONS IN SOIL BORING ON 04/10/08.

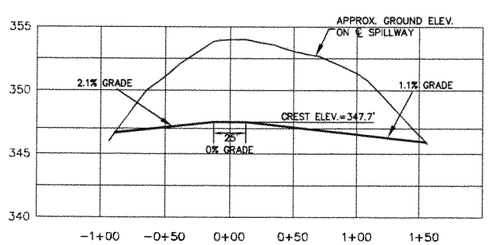

PROFILE ON ℄ OF EMERGENCY SPILLWAY

SCALE: 1"=50' / VERT: 1"=5'

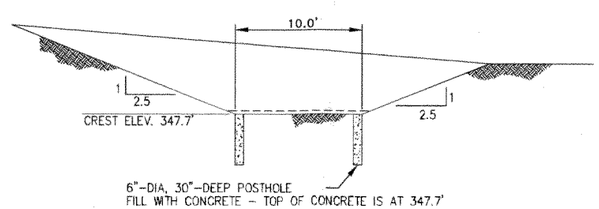

CROSS SECTION OF EMERGENCY SPILLWAY

SCALE: 1"=5'

STUNTZNER ENGINEERING & FORESTRY, LLC MAKES NO REPRESENTATION AS TO THE EXISTENCE OR NON-EXISTENCE OF UTILITIES. IT IS THE RESPONSIBILITY OF THE CONTRACTOR TO COMPLY WITH THE PROVISIONS OF ORS 757.541 TO 757.571. THE CONTRACTOR WILL BE RESPONSIBLE FOR ANY DAMAGE RESULTING FROM DISRUPTION OF SERVICE CAUSED BY CONSTRUCTION ACTIVITIES.

PREPARED FOR:
COOPER CREEK VINEYARDS, LLC
PO BOX 3989
NAPA, CA, 94558

COOPER CREEK RESERVOIR
7855 ZUMWALT RD
MONMOUTH, OR, 97361

GEOLOGICAL LOGS & DETAILS

Stuntzner Engineering & Forestry, LLC
ENGINEERING • LAND SURVEYING • FORESTRY
PLANNING • WATER RIGHTS
TEL: (503) 367-5717
FAX: (503) 367-5808
2137 19th AVENUE
FOREST GROVE, OREGON 97116

REGISTERED PROFESSIONAL ENGINEER #81361 OREGON MAY 13, 2008 WILLIAM PATRICK KNESS
EXPIRES 6/30/09

DRAWN BY:	C. VAN BUREN
CHECKED BY:	W. KNESS
DATE:	9-27-08
REVISED:	
JOB NAME:	PPV COOPER CREEK
DWG. NAME:	3072151K RES.dwg
JOB No.: 307-2-151	SHEET 3 OF 4

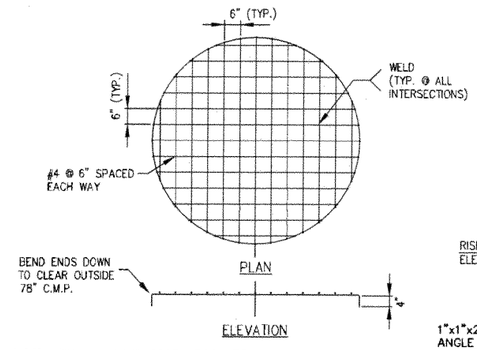

NOTE: RISER & GATE TRASH RACK TO BE PAINTED AFTER FABRICATION.

RISER TRASH RACK DETAIL

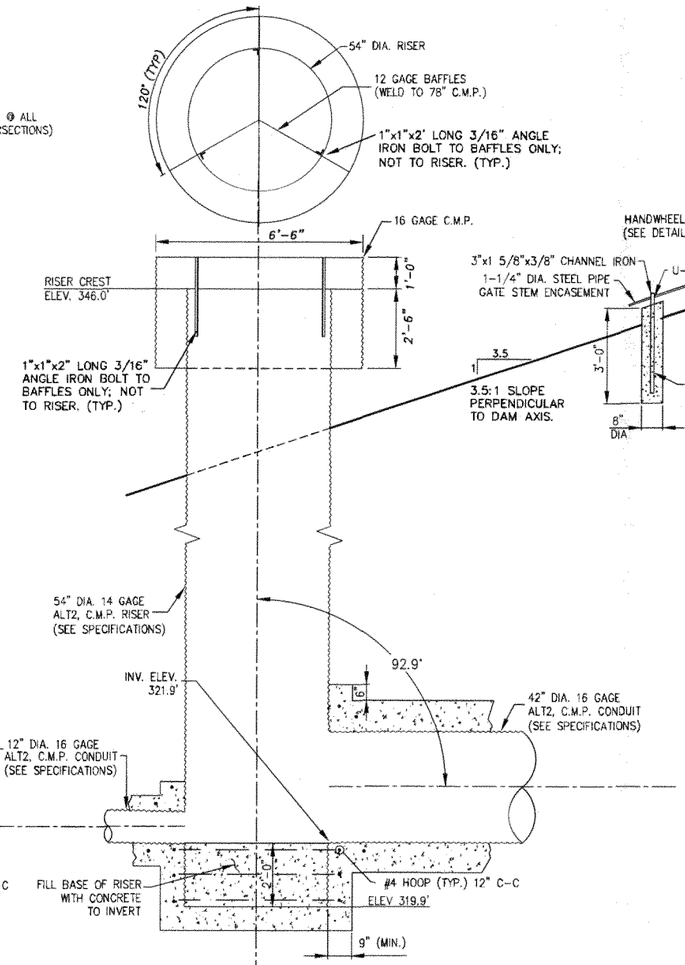

CONDUIT & RISER – PROFILE WITH DETAILS

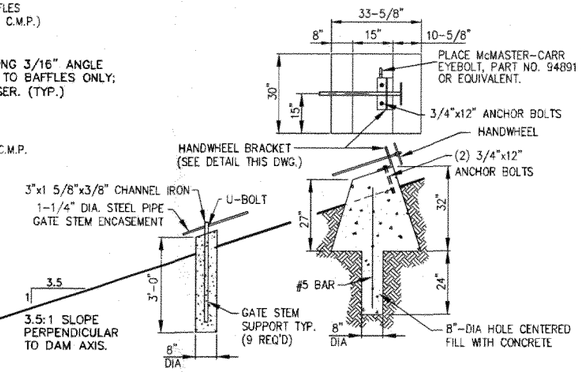

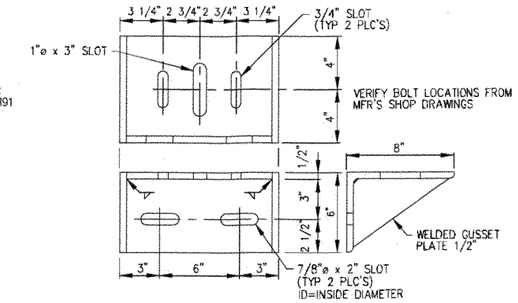

HANDWHEEL BRACKET DETAIL

NO SCALE

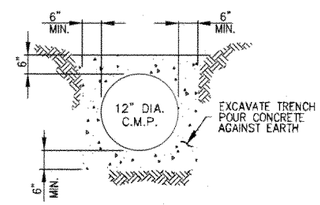

12" PIPE ENCASEMENT DETAIL

NO SCALE

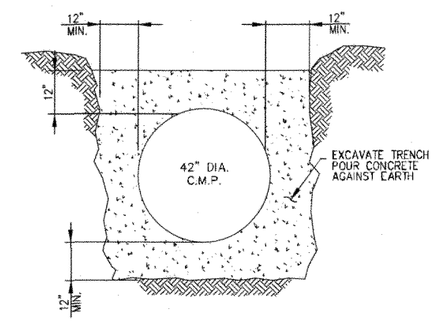

42" PIPE ENCASEMENT DETAIL

NO SCALE

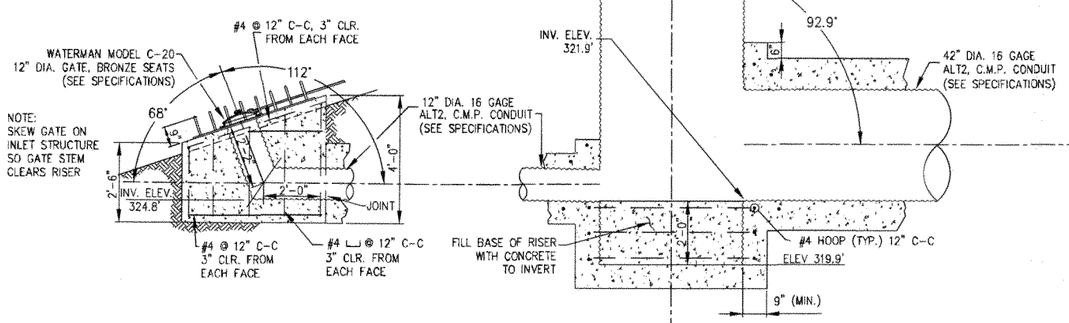

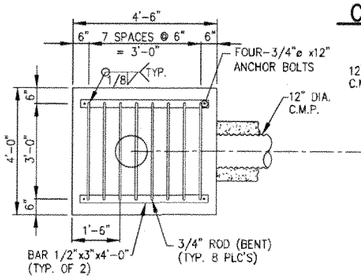

GATE – TRASH RACK DETAIL

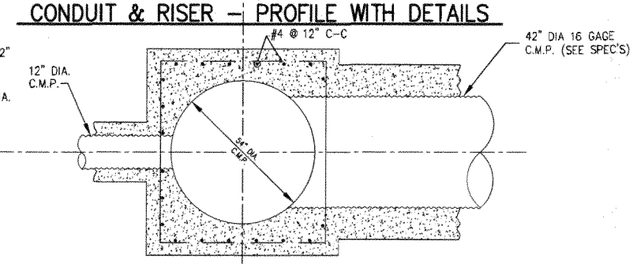

CONDUIT & RISER – PLAN VIEW WITH DETAILS

SCALE: 1"=2.0'

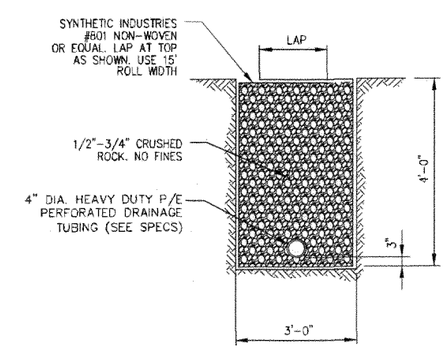

TOE DRAIN DETAIL

NO SCALE

LEGEND

ø = DIAMETER
CLR = CLEAR
C-C = CENTER TO CENTER

STUNTZNER ENGINEERING & FORESTRY, LLC MAKES NO REPRESENTATION AS TO THE EXISTENCE OR NON-EXISTENCE OF UTILITIES. IT IS THE RESPONSIBILITY OF THE CONTRACTOR TO COMPLY WITH THE PROVISIONS OF ORS 757.541 TO 757.571. THE CONTRACTOR WILL BE RESPONSIBLE FOR ANY DAMAGE RESULTING FROM DISRUPTION OF SERVICE CAUSED BY CONSTRUCTION ACTIVITIES.

PREPARED FOR:
COOPER CREEK VINEYARDS, LLC
PO BOX 3989
NAPA, CA, 94558

COOPER CREEK RESERVOIR
7855 ZUMWALT RD
MONMOUTH, OR, 97361

DETAILS #2

Stuntzner Engineering & Forestry, LLC
ENGINEERING • LAND SURVEYING • FORESTRY
PLANNING • WATER RIGHTS
TEL: (503) 367-5117
FAX: (503) 367-0598
2137 19th AVENUE
FOREST GROVE, OREGON 97116
Stuntzner Engineering & Forestry, LLC
CORVALLIS • FOREST GROVE • DALLAS • BROOKINGS

REGISTERED PROFESSIONAL ENGINEER #81361 OREGON MAY 15, 2008 WILLIAM PATRICK KNESS
EXPIRES 6/30/09

DRAWN BY:	C. VAN BUREN
CHECKED BY:	W. KNESS
DATE:	9-27-08
REVISED:	
JOB NAME:	PPV COOPER CREEK
DWG. NAME:	3072151K RES.dwg
JOB No.: 307-2-151	SHEET 4 OF 4

EROSION AND SEDIMENT CONTROL PLANS

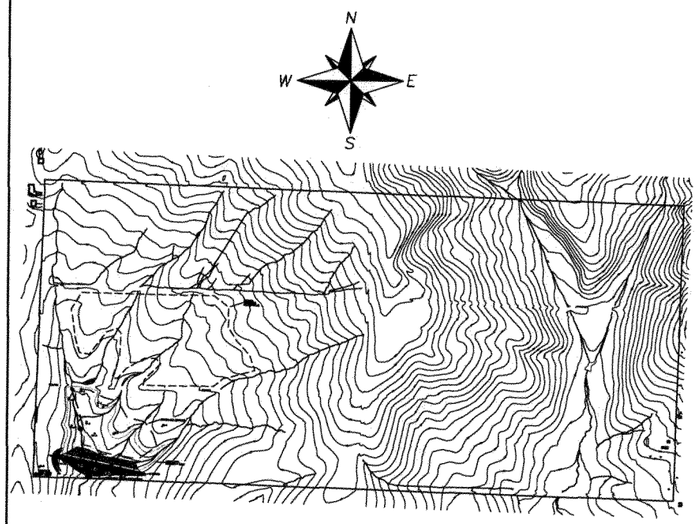

SITE PLAN

SCALE : 1"=600'

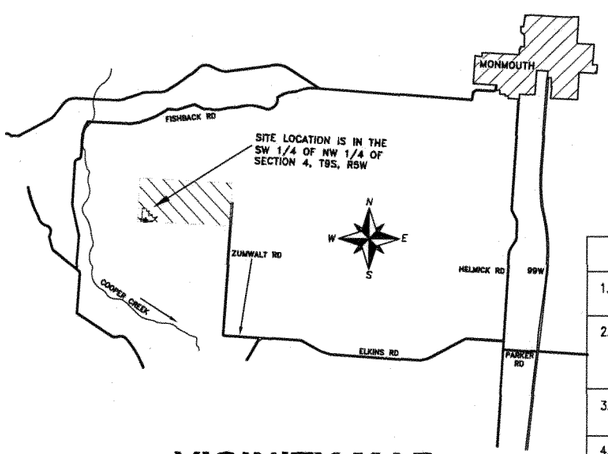

VICINITY MAP

NTS

PROPERTY LOCATION:
SOUTH OF MONMOUTH OREGON, OFF OF ELKINS ROAD, 2.7 MILES WEST OF THE INTERSECTION WITH HWY 99 TURN DUE WEST ON GRAVEL ROAD. FOLLOW GRAVEL ROAD WEST AND NORTH TO SITE. CALL AHEAD AND YOU WILL BE DIRECTED TO THE LOCATION OF THE PROPOSED IMPROVEMENTS.

LATITUDE = 44°49'10.82" N
LONGITUDE = 123°18'54.13" W

PROPERTY DESCRIPTION:
POLK COUNTY ASSESSOR MAPS
8.5.33 TAX LOT 601 AND
9.5.4 TAX LOTS 100, 101, 102, 103, 104

PROPERTY OWNER
COOPER CREEK VINEYARDS LLC.
ATTN: MATT McKAMEY
P.O. BOX 3989
NAPA, CALIFORNIA 94558

ENGINEERING / SURVEYING COMPANY
STUNTZNER ENGINEERING AND FORESTRY
ATTN: BILL KNESS, PE
ATTN: ERIC A. URSTADT. PE/PLS
2137 19TH AVENUE
FOREST GROVE, OREGON 97116

NARRATIVE DESCRIPTIONS

EXISTING SITE CONDITIONS
THE SITE IS PART OF A NEWLY ESTABLISHED VINEYARD, THE SITE HAD BEEN PREVIOUSLY USED FOR GROWING CHRISTMAS TREES. MOST OF THE GROUND HAS BEEN CLEARED OF VEGETATION AND REPLANTED WITH VINES AND GRASSES. THE AREA OF PROPOSED DISTURBANCE HAS NOT YET BEEN DISTURBED AND HAS VARYING TOPOGRAPHY.

DEVELOPED CONDITIONS
THE SITE WILL BE APPROPRIATELY GRADED TO CONSTRUCT A RESERVOIR. NATIVE SOIL WILL BE USED FOR DAM CONSTRUCTION MATERIAL AND A SPILLWAY WILL BE INCLUDED. WATER FROM THE RESERVOIR WILL BE USED FOR VINEYARD IRRIGATION. BMP'S WILL BE INSTALLED TO PREVENT EROSION.

NATURE OF CONSTRUCTION ACTIVITY AND ESTIMATED TIME TABLE
* CLEARING (JUNE 1ST – JUNE 10TH)
* GRADING (JUNE 10TH – AUGUST 31ST)
* FINAL STABILIZATION (SEPTEMBER 1ST – SEPTEMBER 30TH)

TOTAL SITE AREA = 296.9 ACRES

TOTAL DISTURBED AREA = 22.5 ACRES

SITE SOIL CLASSIFICATION:
ACCORDING TO THE USDA SOIL SURVEY FOR POLK COUNTY, THE SOIL ON THE SITE CONSISTS OF BELLPINE SILTY CLAY LOAM ~60% DISTRIBUTION AREA (HYDROLOGIC SOIL GROUP C & D), JORY SILTY CLAY LOAM ~30% DISTRIBUTION AREA (HYDROLOGIC SOIL GROUP D & E), AND THE SUVER SILTY CLAY LOAM ~10% DISTRIBUTION AREA (HYDROLOGIC SOIL GROUP C).

RECEIVING WATER BODIES:
TRIBUTARY TO COOPER CREEK

PERMITTEE'S SITE INSPECTOR – BILL KNESS, PE
COMPANY/AGENCY: STUNTZNER ENGINEERING AND FORESTRY
PHONE: (503) 357-5717
FAX: (503) 357-5698
E-MAIL: billkness@stuntzner.com
DESCRIPTION OF EXPERIENCE:
19 YEARS OF ENVIRONMENTAL ENGINEERING EXPERIENCE, WORKING ON A VARIETY OF PROJECTS SOME INVOLVING EROSION AND SEDIMENT CONTROL.

SITE CONDITION	INSPECTION MINIMUM FREQUENCY
1. ACTIVE PERIOD	DAILY WHEN STORMWATER RUNOFF, INCLUDING IF RUNOFF FROM SNOWMELT IS OCCURING
2. PRIOR TO THE SITE BECOMING INACTIVE OR IN ANTICIPATION OF SITE INACCESSABILITY	ONCE TO ENSURE THAT EROSION AND SEDIMENT CONTROL MEASURES ARE IN WORKING ORDER. ANY NECESSARY MAINTAINCE AND REPAIR MUST BE MADE PRIOR TO LEAVING THE SITE.
3. INACTIVE PERIODS GREATER THAN SEVEN (7) CONSECUTIVE CALLENDAR DAYS.	ONCE EVERY TWO (2) WEEKS.
4. PERIODS WHEN THE SITE IS INACCESSABLE DUE TO INCLEMENT WEATHER.	IF PRACTICAL, INSPECTIONS MUST OCCUR DAILY AT A RELEVANT AND ACCESSABLE DISCHARGE POINT OR DOWNSTREAM LOCATION.

- HOLD A PRE-CON MEETING OF PROJECT CONSTRUCTION PERSONNEL THAT INCLUDES THE EC INSPECTOR
- ALL INSPECTIONS MUST BE MADE IN ACCORDANCE WITH DEQ 1200C PERMIT REQUIREMENTS.
- INSPECTION LOGS MUST BE KEPT IN ACCORDANCE WITH DEQ'S 1200C PERMIT REQUIREMENTS.
- CHANGES TO THE APPROVED ESC PLAN MUST BE SUBMITTED TO DEQ IN THE FORM OF AN ACTION PLAN.

THE PERMITTEE IS REQUIRED TO MEET ALL THE CONDITIONS OF THE 1200C PERMIT. THIS ESCP AND GENERAL CONDITIONS HAVE BEEN DEVELOPED TO FACILITATE COMPLIANCE WITH THE 1200C PERMIT REQUIREMENTS. IN CASES OF DISCREPANCIES OR OMISSIONS, THE 1200C PERMIT REQUIREMENTS SUPERCEDE REQUIREMENTS OF THIS PLAN.

STANDARD EROSION AND SEDIMENT CONTROL PLAN DRAWING NOTES

1. APPLY TEMPORARY AND PERMANENT SOIL STABILIZATION MEASURES ON ALL DISTURBED AREAS AS GRADING PROGRESSES. (SCH A.5.b.ii.6.)
2. CONSTRUCTION ACTIVITIES MUST AVOID OR MINIMIZE EXCAVATION AND CREATION OF BARE GROUND FROM OCTOBER 1 THROUGH MAY 31 EACH YEAR. (SCH A.7.a.i.)
3. DURING WET WEATHER PERIODS TEMPORARY STABILIZATION OF THE SITE MUST OCCUR AT THE END OF EACH WORK DAY IF RAINFALL IS FORECAST IN THE NEXT 24 HOURS. (SCH A.7.a.ii.)
4. ALL EROSION AND SEDIMENT CONTROLS NOT IN THE DIRECT PATH OF WORK MUST BE INSTALLED PRIOR TO ANY LAND DISTURBANCE. (SCH A.7.a.ii.)
5. PRESERVE EXISTING VEGETATION AND RE-VEGETATE OPEN AREAS WHEN PRACTICABLE BEFORE AND AFTER GRADING OR CONSTRUCTION (SCH A.7.c.iii.1)
6. ALL TEMPORARY SEDIMENT CONTROLS MUST REMAIN IN PLACE UNTIL PERMANENT VEGETATION OR OTHER PERMANENT COVERING OF EXPOSED SOIL IS ESTABLISHED. (SCH A.7.c.iii.3.)
7. SEDIMENT CONTROLS MUST BE INSTALLED AND MAINTAINED ON ALL DOWN GRADIENT SIDES OF THE CONSTRUCTION SITE AT ALL TIMES DURING CONSTRUCTION. (SCH A.7.d.i.(1))
8. ALL ACTIVE CATCH BASINS MUST HAVE SEDIMENT CONTROLS INSTALLED AND MAINTAINED AT ALL TIMES DURING CONSTRUCTION. (SCH A.7.d.i.(2))
9. WATER-TIGHT TRUCKS MUST BE USED TO TRANSPORT SATURATED SOILS FROM THE CONSTRUCTION SITE. AN APPROVED EQUIVALENT IS TO DRAIN THE SOIL ON-SITE AT A DESIGNATED LOCATION USING APPROPRIATE BMP'ts; SOIL MUST BE DRAINED SUFFICIENTLY FOR MINIMAL SPILLAGE. (SCH A.7.d.iii.3)
10. TEMPORARY STABILIZATION OR COVERING OF SOIL STOCKPILES MUST OCCUR AT THE END OF EACH WORK DAY OR OTHER BMP's MUST BE IMPLEMENTED TO PREVENT TURBID DISCHARGES TO SURFACE WATERS. (SCH A.7.e.ii.2.)
11. DEVELOP AND MAINTAIN ONSITE A WRITTEN SPILL PREVENTION AND RESPONSE PROCEDURE. (SCH A.7.e.iii.3)
12. ANY USE OF TOXIC OR OTHER HAZARDOUS MATERIALS MUST INCLUDE PROPER STORAGE, APPLICATION, AND DISPOSAL. (SCH A.7.e.iii.(2))
13. THE PERMITTEE MUST PROPERLY PREVENT AND MANAGE HAZARDOUS WASTE, USED OILS, CONTAMINATED SOILS, CONCRETE WASTE, SANITARY WASTE, LIQUID WASTE, OR OTHER TOXIC SUBSTANCES DISCOVERED OR GENERATED DURING CONSTRUCTION. (SCH A.7.e.i.1 AND SCH A.7.e.iii.4)
14. SIGNIFICANT AMOUNTS OF SEDIMENT WHICH LEAVE THE SITE MUST BE CLEANED UP WITHIN 24 HOURS AND PLACED BACK ON THE SITE AND STABILIZED OR PROPERLY DISPOSED. THE CAUSE OF THE SEDIMENT RELEASE MUST BE FOUND AND PREVENTED FROM CAUSING A REOCCURRENCE OF THE DISCHARGED WITHIN THE SAME 24 HOURS. ANY IN-STREAM CLEAN UP OF SEDIMENT SHALL BE PERFORMED ACCORDING TO THE OREGON DIVISION OF STATE LANDS REQUIRED TIME FRAME. (SCH A.7.f.i.1)
15. SEDIMENT MUST NOT BE INTENTIONALLY WASHED INTO STORM SEWERS, DRAINAGE WAYS, OR WATERBODIES. DRY SWEEPING MUST BE USED TO CLEAN UP RELEASED SEDIMENTS. (SCH A.7.f.i.2)
16. THE APPLICATION RATE OF FERTILIZERS USED TO REESTABLISH VEGETATION MUST FOLLOW THE MANUFACTURER'S RECOMMENDATIONS. NUTRIENT RELEASES FROM FERTILIZERS TO SURFACE WATERS MUST BE MINIMIZED. TIME RELEASE FERTILIZERS SHOULD BE USED AND CARE SHOULD BE TAKEN IN THE APPLICATION OF FERTILIZERS WITHIN ANY WATER WAY RIPARIAN ZONE. (SCH A.7.f.i.3.)
17. SEDIMENT MUST BE REMOVED FROM BEHIND SEDIMENT FENCE WHEN IT HAS REACHED A HEIGHT OF ½ THE HEIGHT OF THE FENCE ABOVE THE GROUND, AND BEFORE FENCE REMOVAL. (SCH A.7.f.ii.1.)
18. SEDIMENT MUST BE REMOVED FROM BEHIND BIO BAGS AND OTHER BARRIERS WHEN IT HAS REACHED A HEIGHT OF TWO (2) INCHES AND BEFORE BMP REMOVAL. (SCH A.7.f.ii.2.)
19. CLEANING OF TRAPPED CATCH BASINS MUST OCCUR WHEN THE SEDIMENT RETENTION CAPACITY HAS BEEN REDUCED BY FIFTY (50) PERCENT, AND AT COMPLETION OF PROJECT. (SCH A.7.f.ii.3.)
20. REMOVAL OF TRAPPED SEDIMENT IN A SEDIMENT BASIN OR SEDIMENT TRAP MUST OCCUR WHEN THE SEDIMENT RETENTION CAPACITY HAS BEEN REDUCED BY FIFTY (50) PERCENT, AND AT COMPLETION OF PROJECT. (SCH A.7.f.ii.3&4)
21. DEQ MUST APPROVE OF ANY TREATMENT SYSTEM AND OPERATIONAL PLAN THAT MAY BE NECESSARY TO TREAT CONTAMINATED CONSTRUCTION DEWATERING OR SEDIMENT AND TURBIDITY IN STORMWATER RUNOFF. (SCH A.7.f.iii.)
22. SHOULD ALL CONSTRUCTION ACTIVITIES CEASE FOR THIRTY (30) DAYS OR MORE, THE ENTIRE SITE MUST BE TEMPORARILY STABILIZED USING VEGETATION OR A HEAVY MULCH LAYER, TEMPORARY SEEDING, OR OTHER METHOD. (SCH A.8.c.)
23. SHOULD CONSTRUCTION ACTIVITIES CEASE FOR FIFTEEN (15) DAYS OR MORE ON ANY SIGNIFICANT PORTION OF A CONSTRUCTION SITE, TEMPORARY STABILIZATION IS REQUIRED FOR THAT PORTION OF THE SITE WITH STRAW, COMPOST, OR OTHER TACKIFIED COVERING THAT WILL PREVENT SOIL OR WIND EROSION UNTIL WORK RESUMES ON THAT PORTION OF THE SITE. (SCH A.8.b.)

BMP MATRIX FOR CONSTRUCTION PHASES

REFER TO DEQ GUIDANCE MANUAL FOR A COMPREHENSIVE LIST OF AVAILABLE BMP'S.

	CLEARING	MASS GRADING	UTILITY INSTALLATION	STREET CONSTRUCTION	FINAL STABILIZATION	WET WEATHER (OCT. 1 - MAY 31ST)
EROSION PREVENTION						
PRESERVE NATURAL VEGETATION						
GROUND COVER						
HYDRAULIC APPLICATIONS					X	
PLASTIC SHEETING						*
MATTING						
DUST CONTROL	X	X	X	X	X	X
TEMPORARY/ PERMANENT SEEDING					X	
BUFFER ZONE					X	X
OTHER:						
SEDIMENT CONTROL						
SEDIMENT FENCE (PERIMETER)						
SEDIMENT FENCE (INTERIOR)						
STRAW WATTLES						
FILTER BERM						
INLET PROTECTION						
DEWATERING						
SEDIMENT TRAP						
STRAW BALE DIKE	X	X	X	X	X	X
OTHER:						
RUN OFF CONTROL						
CONSTRUCTION ENTRANCE						
PIPE SLOPE DRAIN						
OUTLET PROTECTION						
SURFACE ROUGHENING						
CHECK DAMS						
OTHER:						
POLLUTION PREVENTION						
PROPER SIGNAGE	X	X	X	X	X	X
HAZ WASTE MGMT	X	X	X	X	X	X
SPILL KIT ON-SITE	X	X	X	X	X	X
CONCRETE WASHOUT AREA	X	X	X	X	X	X
OTHER:						

* ONLY APPLIED TO STOCKPILE LOCATION
** SIGNIFIES BMP THAT WILL BE INSTALLED PRIOR TO ANY GROUND DISTURBING ACTIVITY.

ATTENTION EXCAVATORS:

OREGON LAW REQUIRES YOU TO FOLLOW RULES ADOPTED BY THE OREGON UTILITY NOTIFICATION CENTER. THOSE RULES ARE SET FORTH IN OAR 952-001-0010 THROUGH OAR 952-001-0090. YOU MAY OBTAIN COPIES OF THESE RULES FROM THE CENTER BY CALLING 503-232-1987. IF YOU HAVE ANY QUESTIONS ABOUT THE RULES, YOU MAY CONTACT THE CENTER. YOU MUST NOTIFY THE CENTER AT LEAST TWO BUSINESS DAYS, BEFORE COMMENCING AN EXCAVATION. CALL 503-246-6699.

RATIONALE STATEMENT

A COMPREHENSIVE LIST OF AVAILABLE BEST MANAGEMENT PRACTICES (BMP) OPTIONS BASED ON DEQ's GUIDANCE MANUAL HAS BEEN REVIEWED TO COMPLETE THIS EROSION AND SEDIMENT CONTROL PLAN. SOME OF THE ABOVE LISTED BMP's WERE NOT CHOSEN BECAUSE THEY WERE DETERMINED TO NOT EFFECTIVELY MANAGE EROSION PREVENTION AND SEDIMENT CONTROL FOR THIS PROJECT BASED ON SPECIFIC SITE CONDITIONS, INCLUDING SOIL CONDITIONS TOPOGRAPHIC CONSTRAINTS, ACCESSIBILITY TO THE SITE, AND OTHER RELATED CONDITIONS, AS THE PROJECT PROGRESSES AND THERE IS A NEED TO REVISE THE ESC PLAN, AN ACTION PLAN WILL BE SUBMITTED.

_____
INITIAL

SHEET INDEX

EROSION AND SEDIMENT CONTROL PLANS
1 COVER SHEET FOR EROSION AND SEDIMENT CONTROL
2 RESERVOIR GRADING AND EROSION CONTROL
3 EROSION AND SEDIMENT CONTROL DETAILS

PREPARED FOR:
COOPER CREEK VINEYARDS, LLC
PO BOX 3989
NAPA, CA, 94558

COOPER CREEK RESERVOIR
7855 ZUMWALT RD
MONMOUTH, OR, 97361
EROSION AND SEDIMTN CONTROL COVER SHEET

Stuntzner Engineering & Forestry, LLC
ENGINEERING • LAND SURVEYING • FORESTRY
PLANNING • WATER RIGHTS
COOS BAY/FOREST GROVE/BALLARD/REDDING
2137 19th AVENUE
FOREST GROVE, OREGON 97116
TEL: (503) 357-5717
FAX: (503) 357-5698

REGISTERED PROFESSIONAL ENGINEER #81361 OREGON MAY 13, 2005 WILLIAM PATRICK KNESS
EXPIRES 6/30/09

DRAWN BY: C. VAN BUREN
CHECKED BY: W. KNESS
DATE: 1-19-09
REVISED:
JOB NAME: PPV COOPER CREEK
DWG. NAME: 3072151K RES.dwg
3072151 SHEET 1

STRAW BALE DIKE – SC-4

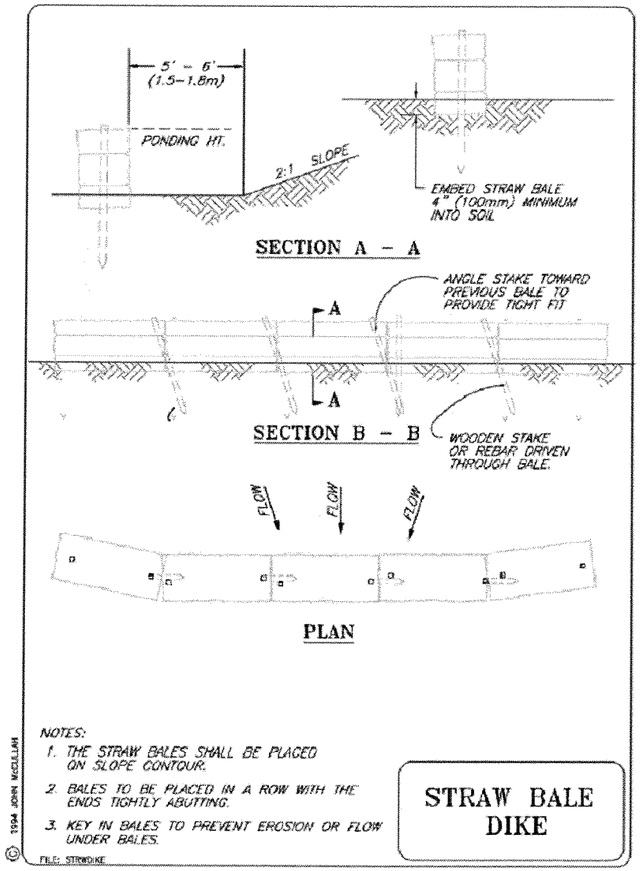

DETAIL
1/3 STRAW BALE DIKE
NTS

Dust Control Notes

1. DUST SHALL BE MINIMIZED TO THE EXTENT PRACTICABLE, UTILIZING ALL MEASURES NECESSARY, INCLUDING, BUT NOT LIMITED TO:

   A. SPRINKLER HAUL AND ACCESS ROADS AND OTHER EXPOSED DUST PRODUCING AREAS
   B. APPLYING AGENCY–APPROVED DUST PALLIATIVES ON ACCESS AND HAUL ROADS.
   C. ESTABLISHING TEMPORARY VEGETATIVE COVER.
   D. PLACING WOOD CHIPS OR OTHER EFFECTIVE MULCHES ON VEHICLE AND PEDESTRIAN USE AREAS.
   E. MAINTAINING THE PROPER MOISTURE CONDITION ON ALL FILL SURFACES.
   F. PREWETTING CUT AND BORROW AREA SURFACES.
   G. USE OF COVERED HAUL EQUIPMENT.

2. CONTRACTOR SHALL FURNISH AND INSTALL EQUIPMENT TO HAUL AND PLACE WATER. AN ADEQUATE SUPPLY OF WATER SHALL BE MAINTAINED AT ALL TIMES.

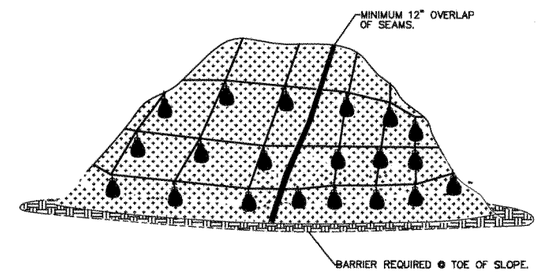

PLASTIC SHEETING

NOTES:
1. MINIMUM 12" OVERLAP OF ALL SEAMS REQUIRED.
2. BARRIER REQUIRED @ TOE OF STOCK PILE.
3. COVERING MAINTAINED TIGHTLY IN PLACE BY USING SANDBAGS OR TIRES ON ROPES WITH A MAXIMUM 10' GRID SPACING IN ALL DIRECTIONS.

DETAIL
2/3 PLASTIC SHEETING
NTS

PREPARED FOR:
COOPER CREEK VINEYARDS, LLC
PO BOX 3989
NAPA, CA, 94558

COOPER CREEK RESERVOIR
7855 ZUMWALT RD
MONMOUTH, OR, 97361

GRADING EROSION AND SEDIMTN CONTROL DETAILS

Stuntzner Engineering & Forestry, LLC
ENGINEERING • LAND SURVEYING • FORESTRY
PLANNING • WATER RIGHTS
COOS BAY*FOREST GROVE*DALLAS*BROOKINGS
2137 19th AVENUE
FOREST GROVE, OREGON 97116
TEL: (503) 357-5717
FAX: (503) 357-5698

REGISTERED PROFESSIONAL ENGINEER #81361 OREGON MAY 15, 2008 WILLIAM PATRICK KNESS
EXPIRES 6/30/09

DRAWN BY:	C. VAN BUREN
CHECKED BY:	W. KNESS
DATE:	1-19-09
REVISED:	
JOB NAME:	PPV COOPER CREEK
DWG. NAME:	3072151K RES.dwg
307-2-151	SHEET 3