Map 1. Vicinity Map USGS 7.5-minute Series (Linnton, OR)

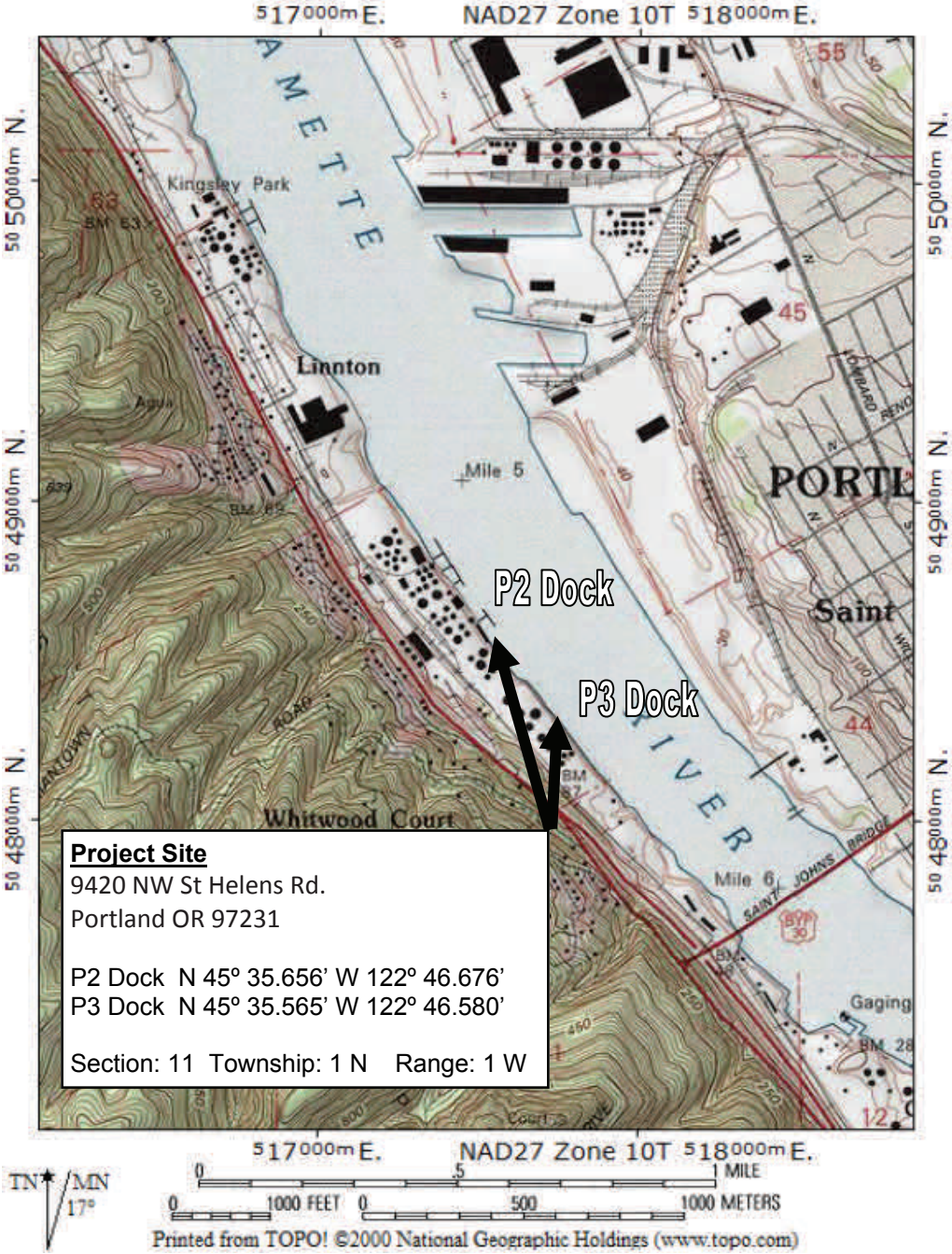

Reference Number: **Applicant: Shore Terminals LLC** **Adjacent Property Owners: ExxonMobil Oil Corp.** **Brix Maritime Co.** **Proposed Project: Pile Repair** **In: Willamette River (RM 5.1)** **Near: Linnton County: Multnomah State: OR** **Date: 02/29/2012 Sheet 12 of 18**	**Norwest Engineering** **Engineering Services** **4110 N.E. 122nd Ave. Suite 207** **Portland, Oregon 97230** **Phone: (503) 200-5080** **Fax: (503) 256-1239**

Map 2. Parcel Map

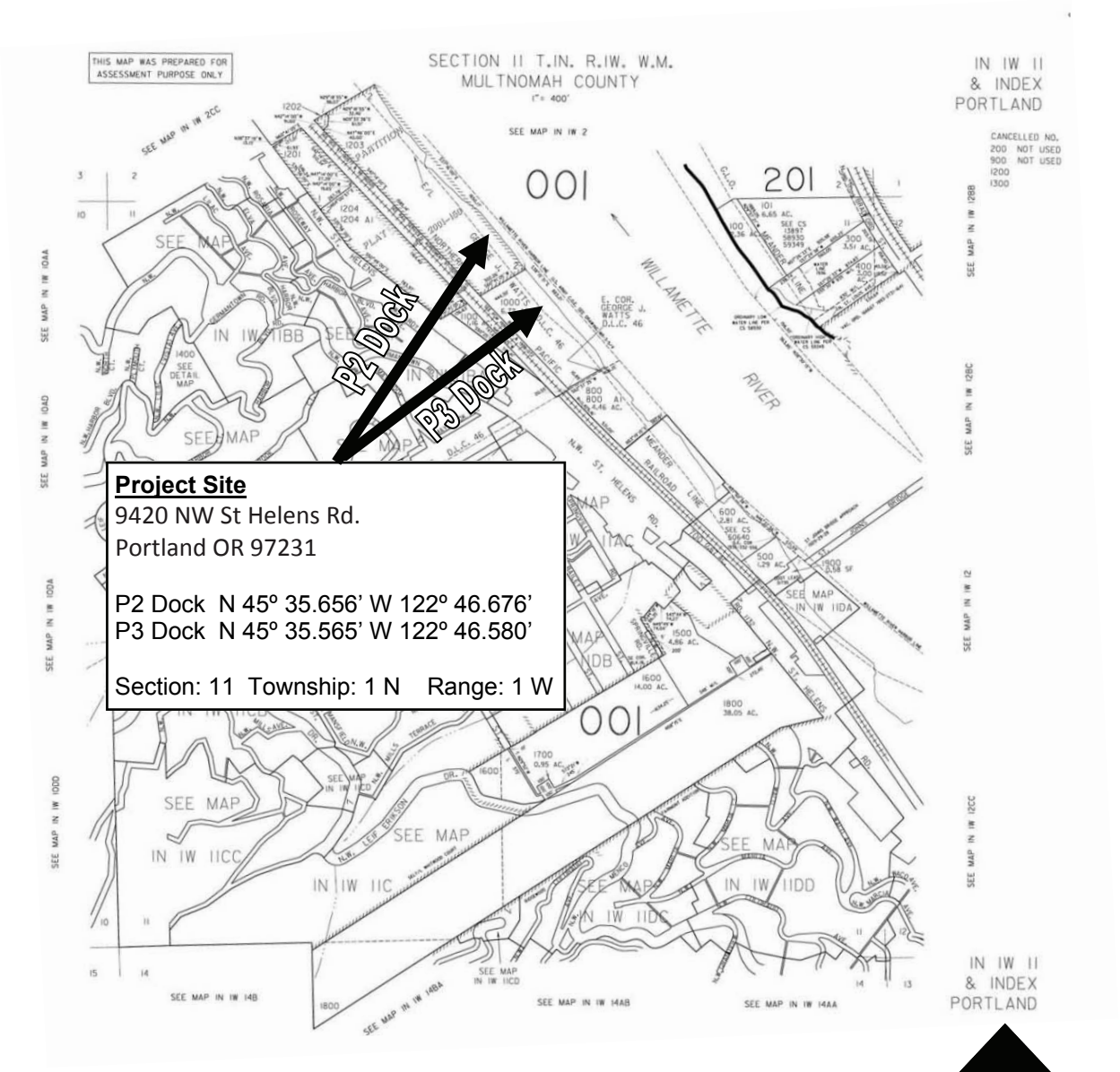

NORTH

Reference Number: **Applicant Name: Shore Terminals LLC** **Proposed Project: Pile Repair** **Location: Willamette River (RM 5.1)** **Date: 02/29/2012** **Sheet 13 of 18**	**Norwest Engineering** **Engineering Services** **4110 N.E. 122nd Ave. Suite 207** **Portland, Oregon 97230** **Phone: (503) 200-5080** **Fax: (503) 256-1239**

REVISIONS				
NO.	DESCRIPTION	BY	APPR.	DATE
A	ISSUED FOR PERMIT			

REPLACE 100 PILES/25 FENDER PILES THRU-OUT DOCK

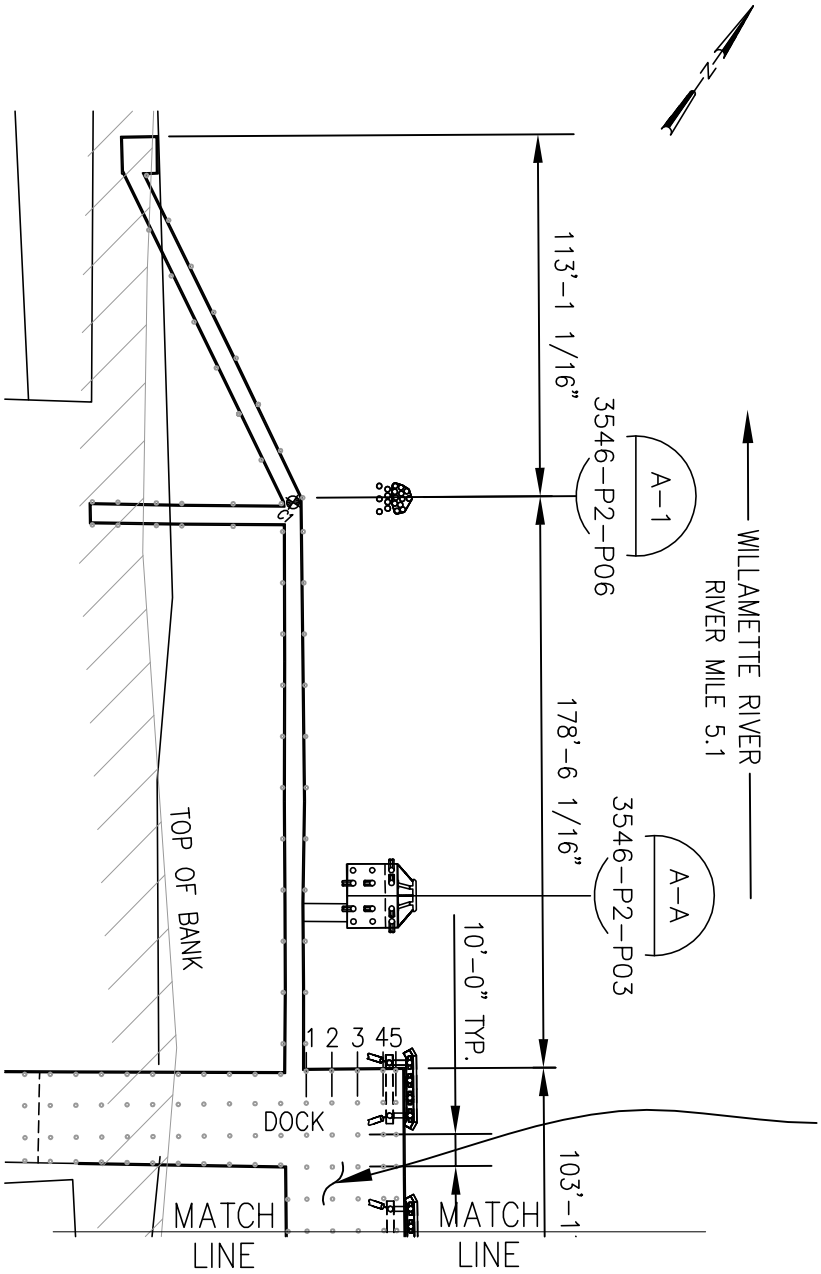

REPLACE ROTTEN/BROKEN STRUCTURAL PILES AS NECESSARY

P2 DREDGE SITE PLAN A

60' 0' 60' 120'

BAR SCALE 1"=60'

LEGEND

◌ -EXIST PILE
① -EXIST SUPPORT BENT

SHORE TERMINALS LLC
9420 NW ST. HELENS ROAD
PORTLAND, OR 97231
Tel: (503) 286-6744

SHEET 3 OF 18

NORWEST ENGINEERING
CONSULTING ENGINEERS PORTLAND, OREGON

N.E. # 3546

DRAWN: BME
CHECKED:
DATE: 03/01/2012
REF. #

PORTLAND TERMINAL - P2 DOCK
PILE LOCATION AND SITE PLAN
PORTLAND, OREGON

ORIGINAL PROJECT NO.

DRAWING NO. A-3546-P2-P03

REV. A

NWP-2012-302-1

REVISIONS				
NO.	DESCRIPTION	BY	APPR.	DATE
A	ISSUED FOR PERMIT			

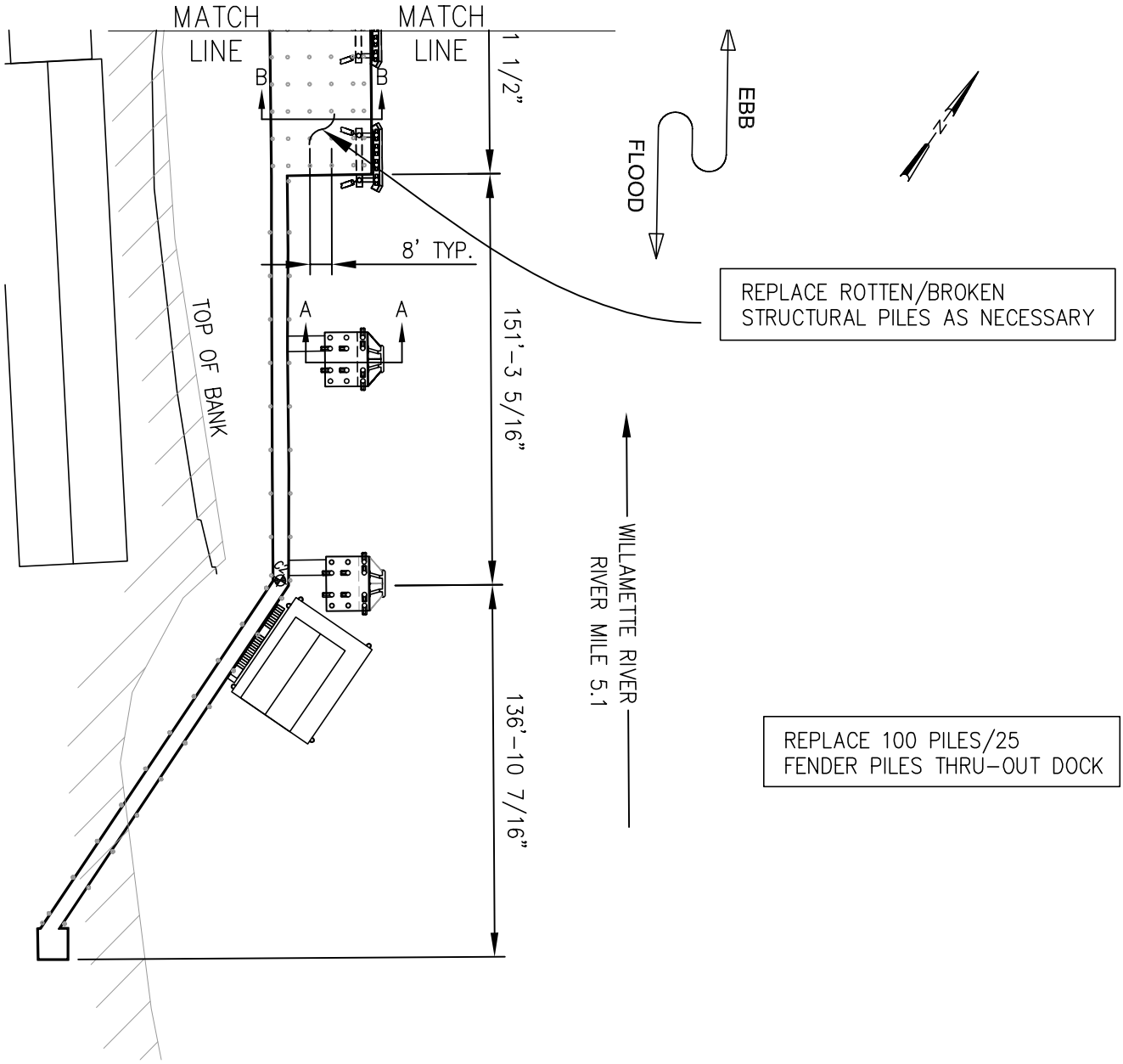

P2 DREDGE SITE PLAN B

60' 0' 60' 120'

BAR SCALE 1"=60'

LEGEND

◌ -EXIST PILE
① -EXIST SUPPORT BENT

SHORE TERMINALS LLC
9420 NW ST. HELENS ROAD
PORTLAND, OR 97231
Tel: (503) 286-6744

SHEET 4 OF 18

NORWEST ENGINEERING
CONSULTING ENGINEERS PORTLAND, OREGON
N.E. # 3546

DRAWN: BME
CHECKED:
DATE: 03/01/2012
REF. #

PORTLAND TERMINAL - P2 DOCK
PILE LOCATION AND SITE PLAN
PORTLAND, OREGON

ORIGINAL PROJECT NO.

DRAWING NO. A-3546-P2-P04
REV. A

NWP-2012-302-1

REVISIONS				
NO.	DESCRIPTION	BY	APPR.	DATE
A	ISSUED FOR PERMIT			

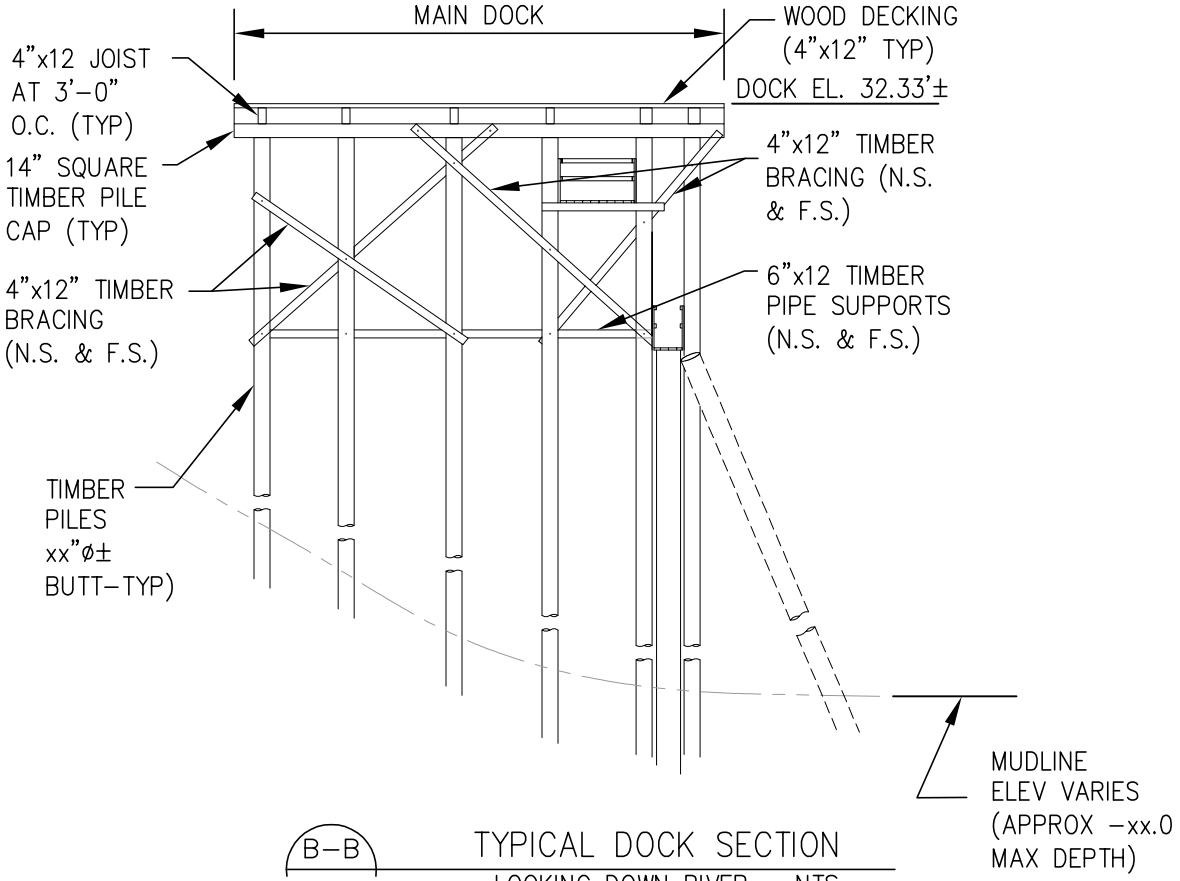

B-B
3546-P2-P04
TYPICAL DOCK SECTION
-LOOKING DOWN RIVER - NTS

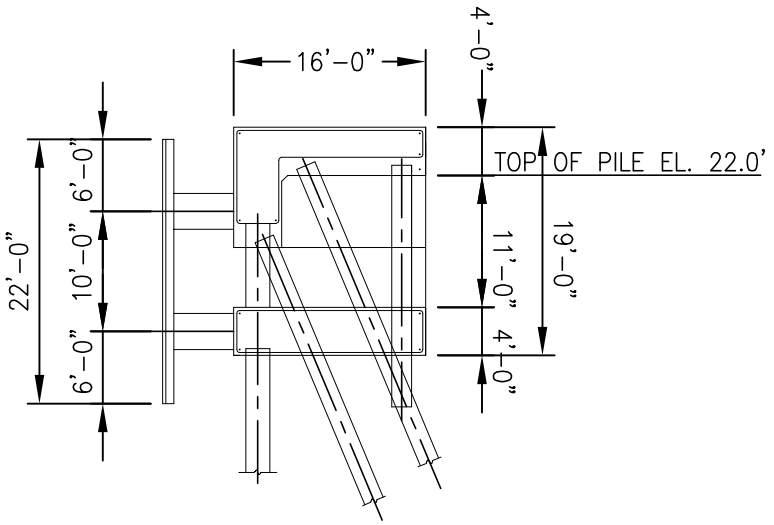

A-A
3546-P2-P04
BREASTING DOLPHIN X-SEC
SCALE 1/16"=1'

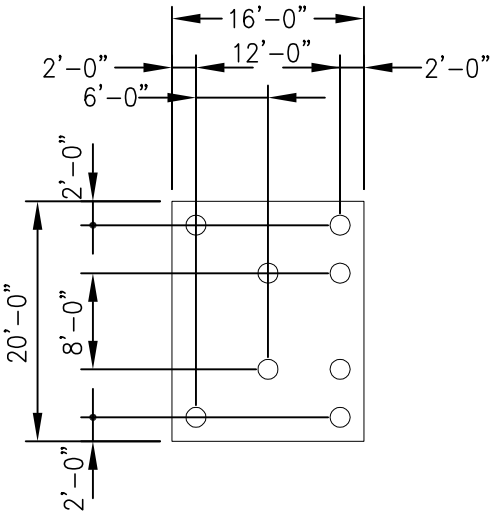

A-A
3546-P2-P04
DOLPHIN PILE PLAN
SCALE 1/16"=1'

NORWEST ENGINEERING
CONSULTING ENGINEERS PORTLAND, OREGON
N.E. # 3546

SHORE TERMINALS LLC
9420 NW ST. HELENS ROAD
PORTLAND, OR 97231
Tel: (503) 286-6744

SHEET 5 OF 18

DRAWN: BME
CHECKED:
DATE: 03/01/2012
REF. #

PORTLAND TERMINAL - P2 DOCK
TYPICAL DOCK CROSS SECTION
PORTLAND, OREGON

ORIGINAL PROJECT NO.

DRAWING NO. A-3546-P2-P05
REV. A

NWP-2012-302-1

REVISIONS				
NO.	DESCRIPTION	BY	APPR.	DATE
A	ISSUED FOR PERMIT			

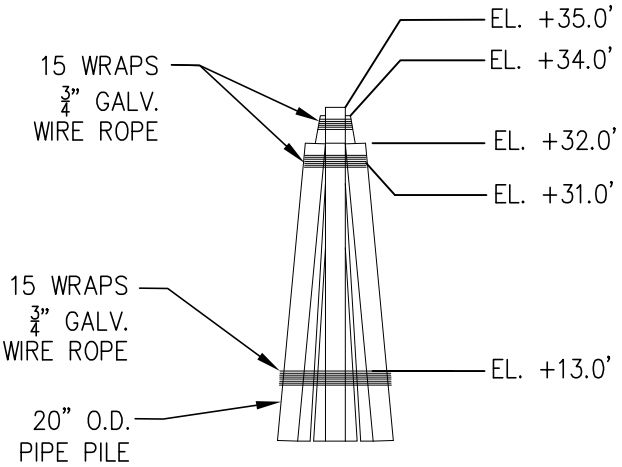

ELEVATION
A-1 19 PILE DOLPHIN
3546-P2-P03 SECTION A-A SCALE 1/16"=1'

PILE SCHEDULE			
PILE BENT	PILE	LOCATION	COMMENT

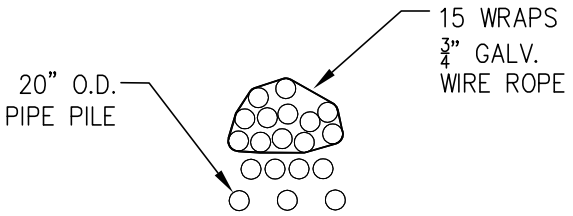

A-1 19 PILE DOLPHIN PLAN
3546-P2-P03 SECTION A-A SCALE 1/16"=1'

SHORE TERMINALS LLC
9420 NW ST. HELENS ROAD
PORTLAND, OR 97231
Tel: (503) 286-6744

SHEET 6 OF 18

NORWEST ENGINEERING
CONSULTING ENGINEERS PORTLAND, OREGON
N.E. # 3546

DRAWN: BME
CHECKED:
DATE: 03/01/2012
REF. #

PORTLAND TERMINAL - P2 DOCK
TYPICAL DOCK CROSS SECTION
PORTLAND, OREGON

ORIGINAL PROJECT NO.

DRAWING NO. A-3546-P2-P06
REV. A

NWP-2012-302-1

REVISIONS				
NO.	DESCRIPTION	BY	APPR.	DATE
A	ISSUED FOR PERMIT			

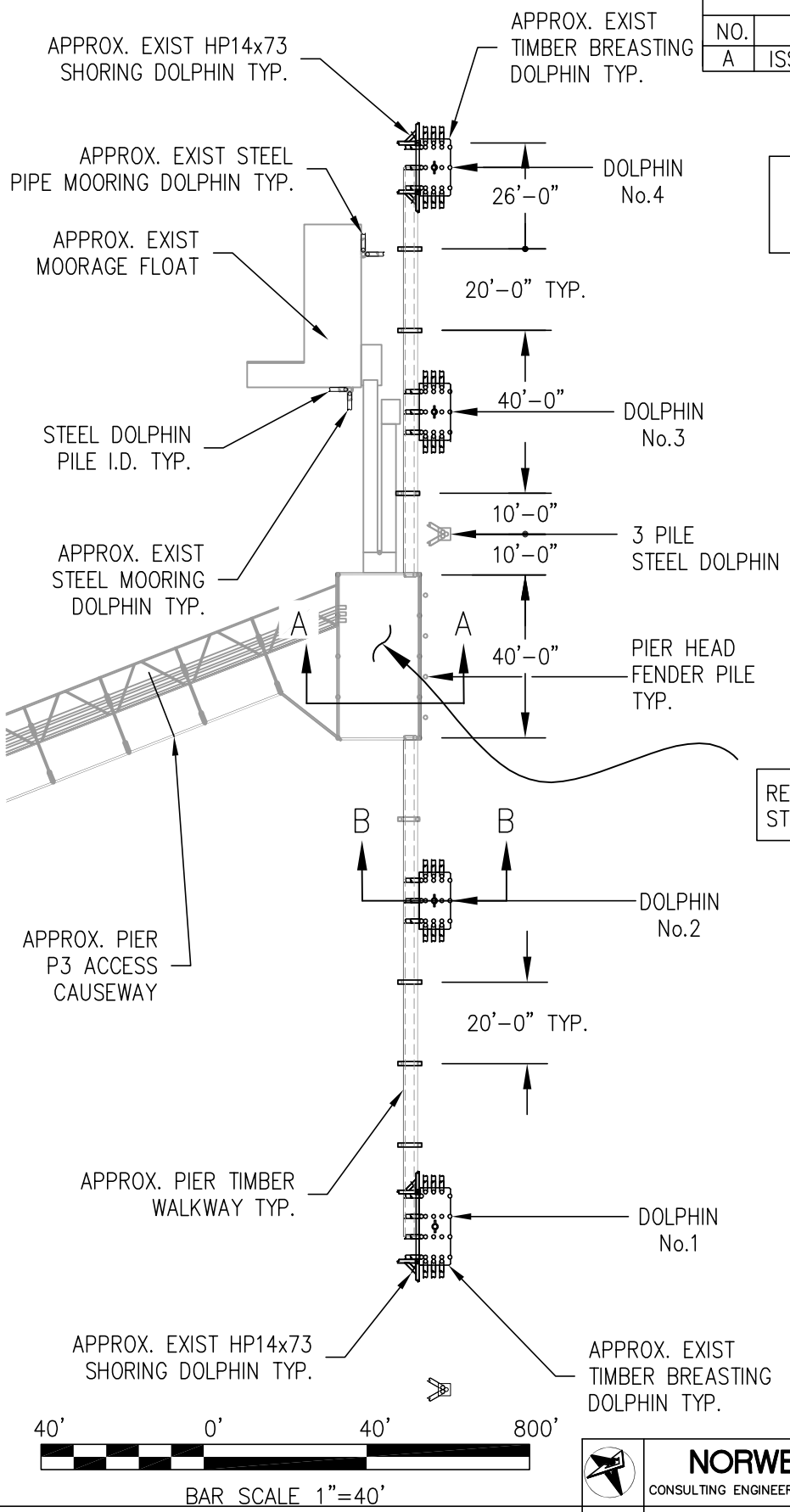

REPLACE 100 PILES/25 FENDER PILES THRU-OUT DOCK (SEE DWG 04 FOR ENLARGED VIEW)

REPLACE ROTTEN/BROKEN STRUCTURAL PILES AS NECESSARY

LEGEND

◌ -EXIST PILE

① -EXIST SUPPORT BENT

SHORE TERMINALS LLC
9420 NW ST. HELENS ROAD
PORTLAND, OR 97231
Tel: (503) 286-6744

SHEET 9 OF 18

NORWEST ENGINEERING
CONSULTING ENGINEERS PORTLAND, OREGON

N.E. # 3546

DRAWN: BME
CHECKED:
DATE: 03/01/2012
REF. #

PORTLAND TERMINAL - P3 DOCK
PILE LOCATION AND SITE PLAN
PORTLAND, OREGON

ORIGINAL PROJECT NO.

DRAWING NO. A-3546-P3-P03

REV. A

NWP-2012-302-1

REVISIONS				
NO.	DESCRIPTION	BY	APPR.	DATE
A	ISSUED FOR PERMIT			

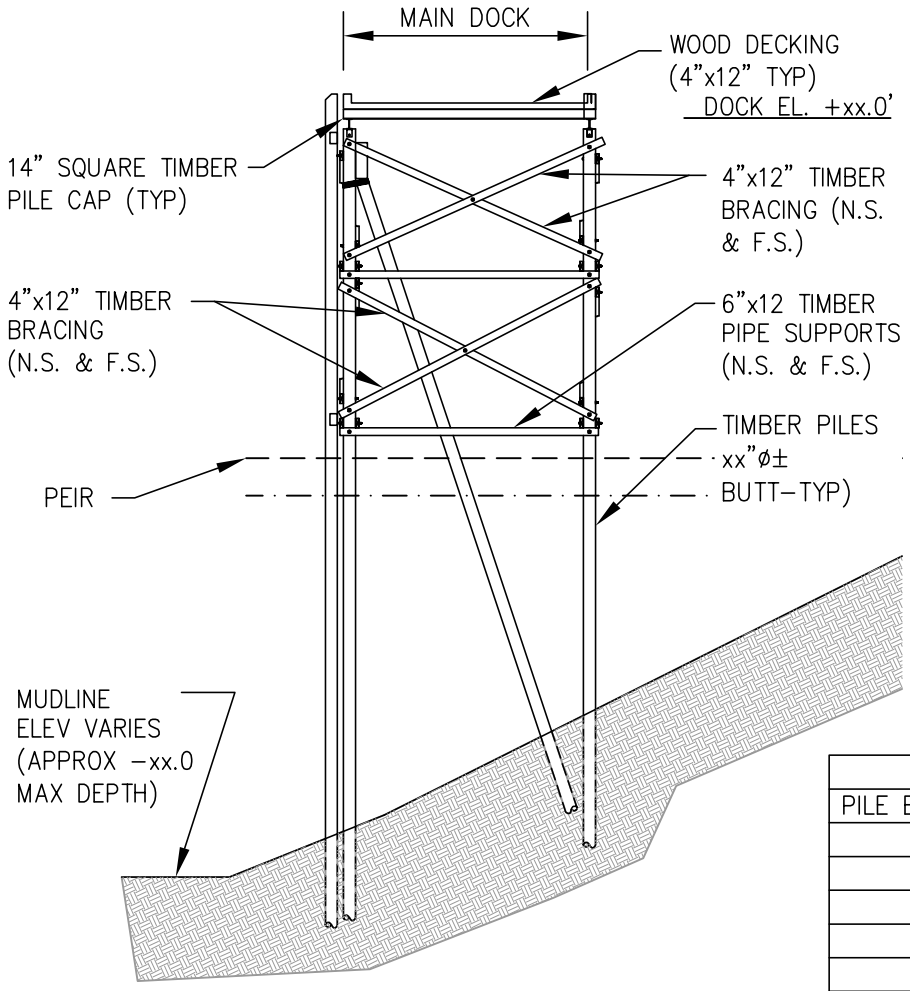

A-A
3546-P2-P03

TYPICAL DOCK SECTION A-A

NTS

PILE SCHEDULE			
PILE BENT	PILE	LOCATION	COMMENT

NORWEST ENGINEERING
CONSULTING ENGINEERS PORTLAND, OREGON

N.E. # 3546

SHORE TERMINALS LLC
9420 NW ST. HELENS ROAD
PORTLAND, OR 97231
Tel: (503) 286-6744

SHEET 10 OF 18

DRAWN: BME
CHECKED:
DATE: 03/01/2012
REF. #

PORTLAND TERMINAL - P3 DOCK
TYPICAL DOCK CROSS SECTION
PORTLAND, OREGON

ORIGINAL PROJECT NO.

DRAWING NO. A-3546-P3-P04

REV. A

NWP-2012-302-1

REVISIONS				
NO.	DESCRIPTION	BY	APPR.	DATE
A	ISSUED FOR PERMIT			

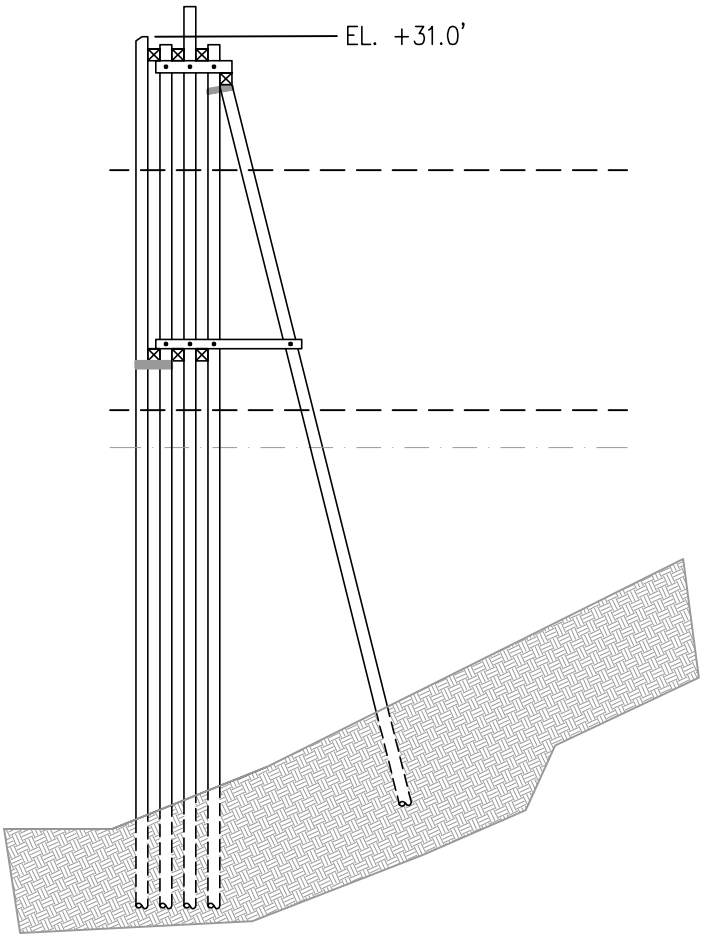

B–B
3546–P2–P03

MOORING DOLPHIN SECTION B–B

SCALE 1/16"=1'

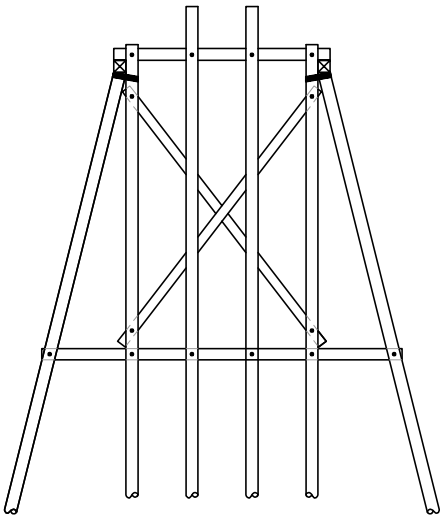

B–B
3546–P2–P03

MOORING DOLPHIN ELEVATION

SCALE 1/16"=1'

SHORE TERMINALS LLC
9420 NW ST. HELENS ROAD
PORTLAND, OR 97231
Tel: (503) 286-6744

SHEET 11 OF 18

NORWEST ENGINEERING
CONSULTING ENGINEERS PORTLAND, OREGON

N.E. # 3546

DRAWN: BME
CHECKED:
DATE: 03/01/2012
REF. #

PORTLAND TERMINAL – P3 DOCK
TYPICAL DOCK CROSS SECTION
PORTLAND, OREGON

ORIGINAL PROJECT NO.

DRAWING NO. A–3546–P3–P05

REV. A

NWP-2012-302-1